SPECIFICATIONS
CX130E

ENGINE
Model ____ FPT NEF4
Type ___ Water-cooled, 4-cycle diesel, 4-cylinder in line, High pressure common rail system (electric control), turbocharger with air cooled intercooler, SCRoF, EGR free.
Emissions ____ Stage V
Number of cylinders / Displacement (l) ____ 4 / 4.5
Bore and stroke (mm) ____ 104 X 132
Rated flywheel horse power
ISO 9249 (kW) ____ 76.4 at 2000 min^{-1} (rpm)
ISO 14396 (kW) ____ 78.8 at 2000 min^{-1} (rpm)
Maximum torque
ISO 9249 (Nm) ____ 370 at 1800 min^{-1} (rpm)
ISO 14396 (Nm) ____ 379 at 1800 min^{-1} (rpm)

HYDRAULIC SYSTEM
Main pumps ____ 2 variable displacement axial piston pumps with regulating system
Max. oil flow (l/min) ____ 2 × 129 at 2000 min^{-1}
Working circuit pressure
Boom/Arm/Bucket (MPa) ___ 34.3 - 36.3 with auto power boost
Swing circuit (MPa) ____ 27.9
Travel circuit (MPa) ____ 34.3
Pilot pump ____ 1 gear pump
Max. oil flow (l/min) ____ 20
Working circuit pressure (MPa) ____ 3.9
Blade pump (CX130E Blade) ____ 1 gear pump
Max. oil flow (l/min) ____ 54 at 2000 min-1
Working circuit pressure (MPa) ____ 20.6
Boom cylinders
Bore (mm) ____ 105
Stroke (mm) ____ 961
Arm cylinder
Bore (mm) ____ 115
Stroke (mm) ____ 1108
Bucket cylinder
Bore (mm) ____ 95
Stroke (mm) ____ 881

SWING
Swing motor ____ Fixed displacement axial piston motor
Maximum swing speed (min^{-1}) ____ 14.3
Swing torque (Nm) ____ 33,000

FILTERS
Suction filter (µm) ____ 105
Return filter (µm) ____ 6
Pilot line filter (µm) ____ 8

ELECTRICAL SYSTEM
Voltage (V) ____ 24
Alternator (Amp) ____ 90
Starter (V - kW) ____ 24 - 4.0
Battery ____ 2 X 12 V 72 Ah/5HR

UNDERCARRIAGE
Travel motor ____ Variable displacement axial piston motor
High travel speed (Automatic travel speed shifting) (km/h) _ 5.7
Low travel speed (km/h) ____ 3.4
Drawbar pull (kN) ____ 116
Number of carrier rollers (each side) ____ 2
Number of track rollers (each side) ____ 7
Number of shoes (each side) ____ 46
Type of shoes ____ Triple grouser shoes
Gradeability ____ 70% (35°)

NOISE (PRELIMINARY)
External guaranteed sound level
(EU Directive 2000/14/EC) ____ LwA 99 dB(A)
Operator cab sound pressure level (ISO 6396) _ LpA 69 dB(A)

CIRCUIT AND COMPONENT CAPACITIES
Fuel tank (l) ____ 250
Hydraulic system (l) ____ 157
Hydraulic tank (l) ____ 82
AdBlue tank (l) ____ 60

PERFORMANCE DATA		Arm 2.50 m	Arm 3.01 m	Arm 2.11 m
Boom length	mm	4630	4630	4630
Bucket radius	mm	1200	1200	1200
Bucket wrist action	°	178	178	178
A Maximum reach at GRP	mm	8170	8640	7810
B Maximum reach	mm	8310	8770	7960
C Max. digging depth	mm	5550	6050	5160
D Max. digging height	mm	8770	9050	8550
E Max. dumping height	mm	6390	6680	6170
F Min. swing radius	mm	2340	2660	2360

DIGGING FORCE (ISO 6015)		Arm 2.50 m	Arm 3.01 m	Arm 2.11 m
Arm digging force	kN	62	56	70
with Auto power up	kN	66	60	74
Bucket digging force	kN	90	90	90
with Auto power up	kN	95	95	95

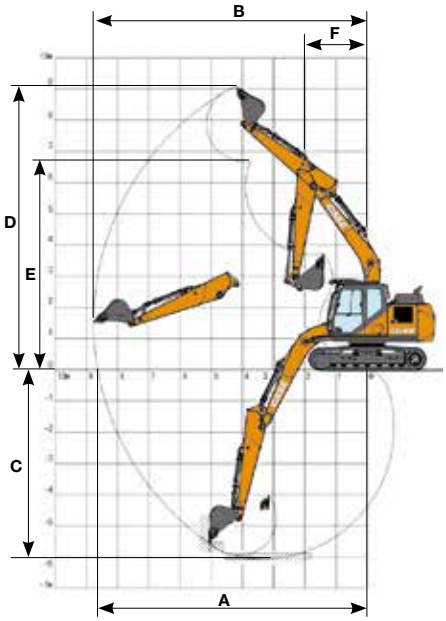

SPECIFICATIONS
CX130E BLADE-LC

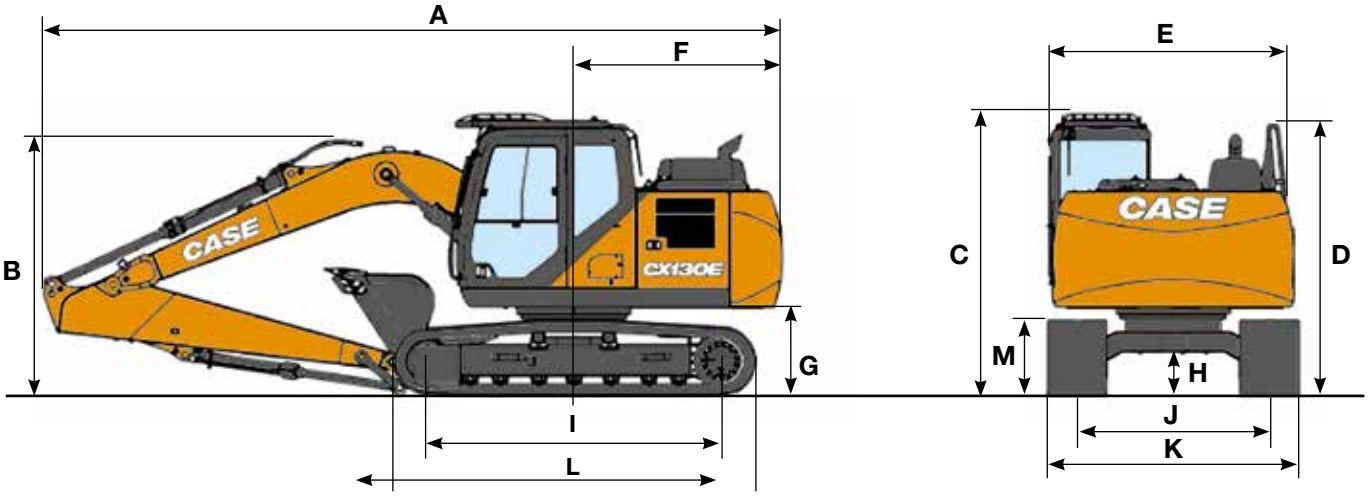

GENERAL DIMENSIONS		Arm 2.50 m	Arm 3.01 m	Arm 2.11 m
Overall length (without attachment) (Blade/LC)	mm	4160 / 4050	4160 / 4050	4160 / 4050
A Overall length (with attachment) (Blade/LC)	mm	7900 / 7660	7910 / 7680	7890 / 7660
B Overall height (to top of boom)	mm	2760	2740	2670
C Cab height	mm	2910	2910	2910
D Overall height (to top of handrail)	mm	2800	2800	2800
E Upper structure overall width	mm	2490	2490	2490
F Swing (rear end radius)	mm	2190	2190	2190
G Clearance height under upper structure	mm	900	900	900
H Minimum ground clearance (Blade/LC)	mm	425 / 420	425 / 420	425 / 420
I Wheel base (center to center of wheels) (Blade/LC)	mm	2790 / 3040	2790 / 3040	2790 / 3040
J Track gauge	mm	1990	1990	1990
K Undercarriage overall width (with 600 mm shoes)	mm	2590	2590	2590
L Crawler overall length (Blade/LC)	mm	3500 / 3760	3500 / 3760	3500 / 3760
M Crawler tracks height	mm	780	780	780

WEIGHT AND GROUND PRESSURE

With 2.50 m arm, 0.5 m³ bucket, 600 mm grouser shoes, operator, lubricant, coolant, full fuel tank and FOPS protection level 2.

	WEIGHT	GROUND PRESSURE
Blade	13900 kg	0.037 MPa
LC	13300 kg	0.033 MPa

Counterweight: 1870 kg

With 5.30 m arm, 0.28 m³ bucket, 700 mm grouser shoes, operator, lubricant, coolant, full fuel tank.

	WEIGHT	GROUND PRESSURE
LR	15400 kg	0.033 MPa

Counterweight: 3400 kg

HAMMER
CX130E

Direct Fit

Model	Install Weight kg	Reference machine settings		Arm 2.11 m	Arm 2.50 m	Arm 3.01 m
		Flow l/min	Relief Pressure Mpa			
CB BREAKER						
CB135S	630	87	18-21	□	□	□
CB150S	950	87	19-21	□	—	—

□ Applicable
— Not applicable

SPECIFICATIONS (PRELIMINARY)
CX130E LONG REACH

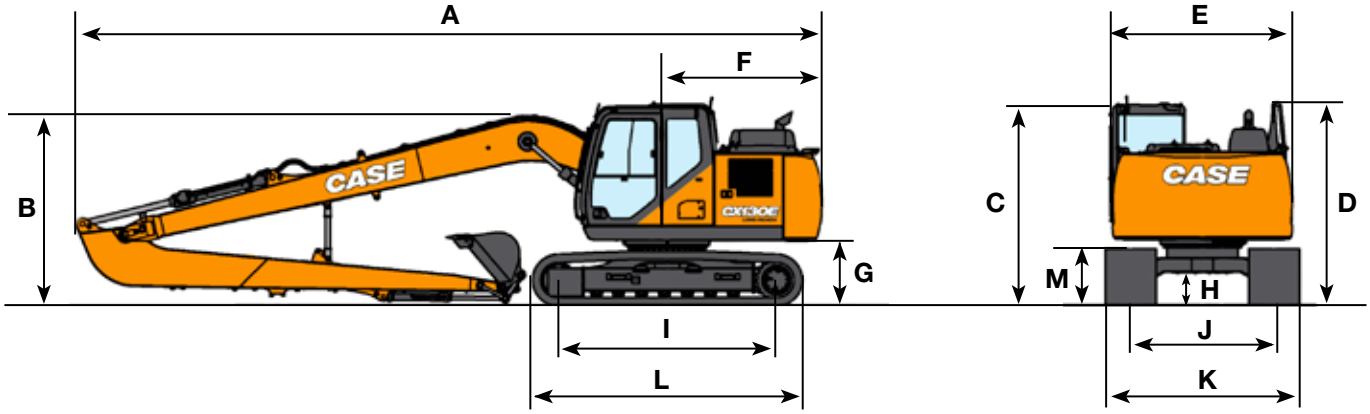

GENERAL DIMENSIONS			Arm 5.30 m
	Overall length (without attachment)	mm	4030
A	Overall length (with attachment)	mm	10390
B	Overall height (to top of boom)	mm	2660
C	Cab height	mm	2800
D	Overall height (to top of handrail)	mm	2810
E	Upper structure overall width	mm	2530
F	Swing (rear end radius)	mm	2190
G	Clearance height under upper structure	mm	895
H	Minimum ground clearance	mm	420
I	Wheel base (center to center of wheels)	mm	3040
L	Crawler overall length	mm	3760
M	Crawler tracks height	mm	780
J	Track gauge	mm	1990
K	Undercarriage overall width (with 700 mm shoes)	mm	2590

PERFORMANCE DATA			Arm 5.30 m
	Boom length	mm	7400
	Bucket radius	mm	1050
	Bucket wrist action		180°
A	Maximum reach at GRP	mm	13010
B	Maximum reach	mm	13100
C	Max. digging depth	mm	10130
D	Max. digging height	mm	12070
E	Max. dumping height	mm	10080
F	Min. swing radius	mm	3220

DIGGING FORCE (ISO 6015)	Arm 5.30 m
Arm digging force	23 kN
Bucket digging force	35 kN

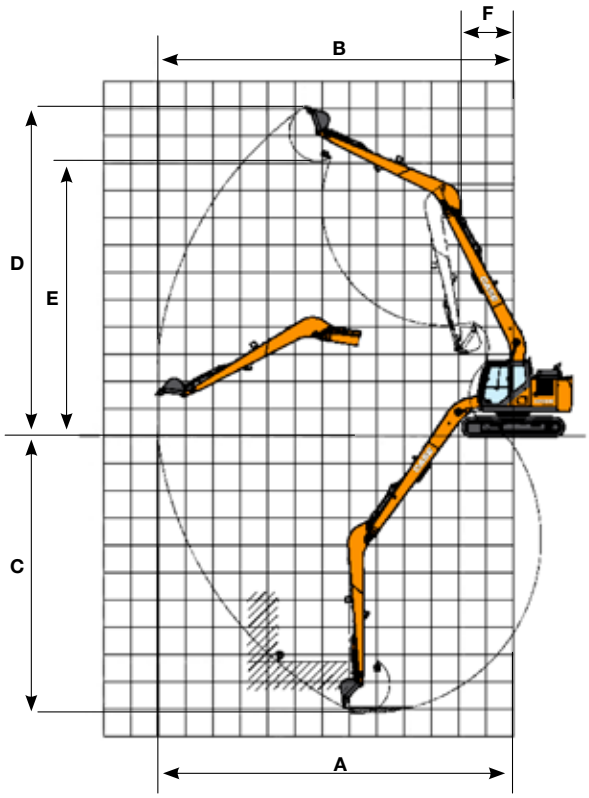

LIFTING CAPACITY
CX130E BLADE-LC

	REACH								
Front / Side	2.0 m		4.0 m		6.0 m		At max reach		m
BLADE DOWN - Short arm 2.11 m, 600 mm shoes, max reach 6.76 m									
6.0 m			3600*	3600*			2730*	2730*	5.00
4.0 m			4270*	4270*	3800*	2510	2440*	2330	6.27
2.0 m			5970*	4330	4190*	2410	2490*	2020	6.74
0 m			6990*	4050	4540*	2310	2840*	2040	6.58
-2.0 m	7910*	7910*	6620*	4030			3840*	2460	5.74
BLADE DOWN - Standard arm 2.50 m, 600 mm shoes, max reach 7.11 m									
6.0 m							2200*	2200*	5.47
4.0 m			3870*	3870*	3550*	2570	2010*	2010*	6.65
2.0 m			5650*	4430	4050*	2450	2060*	1900	7.09
0 m			6920*	4110	4510*	2340	2340*	1910	6.94
-2.0 m	7160*	7160*	6840*	4040	4300*	2320	3080*	2250	6.15
-4.0 m			4810*	4210			4130*	3710	4.39
BLADE DOWN - Long arm 3.01 m, 600 mm shoes, max reach 7.57 m									
6.0 m					2170*	2170*	2000*	2000*	6.06
4.0 m					3170*	2580	1850*	1850*	7.14
2.0 m			5070*	4470	3750*	2440	1910*	1700	7.55
0 m			6620*	4080	4340*	2300	2140*	1700	7.41
-2.0 m	6350*	6350*	6890*	3950	4410*	2240	2730*	1950	6.68
-4.0 m	10230*	10230*	5580*	4050			3970*	2890	5.11
BLADE UP - Short arm 2.11 m, 600 mm shoes, max reach 6.76 m									
6.0 m			3600*	3600*			2730*	2730*	5.00
4.0 m			4270*	4270*	3080	2360	2440*	2190	6.27
2.0 m			5520	4030	2970	2260	2490	1890	6.74
0 m			5210	3770	2870	2160	2520	1910	6.58
-2.0 m	7910*	7910*	5190	3740			3060	2300	5.74
BLADE UP - Standard arm 2.50 m, 600 mm shoes, max reach 7.11 m									
6.0 m							2200*	2200*	5.47
4.0 m			3870*	3870*	3140	2420	2010*	2010*	6.65
2.0 m			5620	4130	3010	2300	2060*	1780	7.09
0 m			5270	3820	2890	2190	2340*	1790	6.94
-2.0 m	7160*	7160*	5200	3760	2870	2170	2780	2100	6.15
-4.0 m			4810*	3910			4130*	3460	4.39
BLADE UP - Long arm 3.01 m, 600 mm shoes, max reach 7.57 m									
6.0 m					2170*	2170*	2000*	2000*	6.06
4.0 m					3160	2430	1850*	1800	7.14
2.0 m			5070*	4170	3000	2290	1910*	1590	7.55
0 m			5240	3790	2850	2150	2100	1590	7.41
-2.0 m	6350*	6350*	5100	3660	2790	2090	2410	1820	6.68
-4.0 m	10230*	10230*	5210	3760			3620	2700	5.11

* The above loads (kg) are compliant to the ISO standards and refer to the excavator equipped without bucket. The indicated loads are no more than 87% of hydraulic system lift capacity or 75% of static tipping load. Values marked with an asterisk (*) are limited by the hydraulic lifting capacity.

LIFTING CAPACITY
CX130E BLADE-LC

	REACH								
Front / Side	2.0 m		4.0 m		6.0 m		At max reach		m
LC UNDERCARRIAGE - Short arm 2.11 m, 600 mm shoes, max reach 6.76 m									
6.0 m			3600*	3600*			2730*	2730*	5.00
4.0 m			4270*	4270*	3440	2260	2440*	2090	6.27
2.0 m			5970*	3860	3330	2160	2490*	1810	6.74
0 m			5980	3600	3220	2060	2820	1820	6.58
-2.0 m	7910*	7910*	5950	3570			3440	2200	5.74
LC UNDERCARRIAGE - Standard arm 2.50 m, 600 mm shoes, max reach 7.11 m									
6.0 m							2200*	2200*	5.47
4.0 m			3870*	3870*	3500	2320	2010*	1950	6.65
2.0 m			5650*	3960	3370	2200	2060*	1700	7.09
0 m			6040	3650	3250	2090	2340*	1710	6.94
-2.0 m	7160*	7160*	5960	3590	3220	2070	3080*	2000	6.15
-4.0 m			4810*	3750			4130*	3310	4.39
LC UNDERCARRIAGE - Long arm 3.01 m, 600 mm shoes, max reach 7.57 m									
6.0 m					2170*	2170*	2000*	2000*	6.06
4.0 m					3170*	2330	1850*	1720	7.14
2.0 m			5070*	4010	3360	2190	1910*	1520	7.55
0 m			6010	3620	3210	2040	2140*	1510	7.41
-2.0 m	6350*	6350*	5860	3490	3150	1990	2710	1730	6.68
-4.0 m	10230*	10230*	5580*	3590			3970*	2570	5.11

LIFTING CAPACITY (PRELIMINARY)
CX130E LONG REACH

	REACH														
Front / Side	2.0 m		4.0 m		6.0 m		8.0 m		10.0 m		12.0 m		At max reach		m
5.30 m length, 750 LC mm shoes, max reach 12.00 m															
10.0 m							1030*	1030*					720*	720*	8.49
8.0 m							1400*	1400*	760*	760*			660*	660*	10.12
6.0 m							1530*	1530*	1440*	1360			640*	640*	11.17
4.0 m					2050*	2050*	1800*	1800*	1650*	1300			660*	660*	11.79
2.0 m			4310*	4310*	2760*	2630	2150*	1730	1840*	1210	750*	750*	710*	710*	12.04
0 m			2770*	2770*	3390*	2310	2450	1560	1770	1120			790*	790*	11.95
-1.5 m	1420*	1420*	2690*	2690*	3460	2120	2320	1450	1700	1060			930*	860	11.52
-4.0 m	2060*	2060*	3280*	3280*	3390	2060	2270	1400	1680	1030			1190*	950	10.69
-6.0 m	2770*	2770*	4240*	3750	3430	2090	2300	1420					1750*	1160	9.37
-8.0 m			4140*	3990	2860*	2230							2240*	1740	7.29

BUCKETS
CX130E

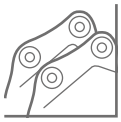

CX130E - Direct Mount

Capacity m³ (ISO7451 HEAPED)	Width mm	Weight kg	Arm 2.11 m	Arm 2.50 m	Arm 3.01 m
GENERAL PURPOSE BUCKETS					
0.21	450	250	○	○	○
0.31	600	290	○	○	○
0.41	750	330	○	○	○
0.52	900	360	○	○	○
0.58	1000	400	○	○	●
0.66	1100	430	●	●	▲
0.73	1200	450	●	▲	■
HEAVY DUTY BUCKETS					
0.21	450	350	○	○	○
0.31	600	400	○	○	○
0.42	750	460	○	○	○
0.45	800	470	○	○	○
0.52	900	510	○	○	●
0.60	1000	550	○	●	▲
0.67	1100	580	●	▲	■
0.74	1200	620	▲	■	—

Capacity m³ (ISO7451 HEAPED)	Width mm	Weight* kg	Arm 2.11 m	Arm 2.50 m	Arm 3.01 m
GRADING BUCKETS					
0.59	1500	440	○	●	●
0.72	1800	510	●	▲	■
0.80	2000	550	▲	■	—
DITCH CLEANING BUCKETS					
0.54	1830	480	○	○	●
90° TILT DITCH CLEANING BUCKETS**					
0.46	1500	640	○	●	▲
0.55	1800	690	●	▲	■
0.61	2000	730	▲	■	—

CX130E - Quick coupled

Capacity m³ (ISO7451 HEAPED)	Width mm	Weight kg	Arm 2.11 m	Arm 2.50 m	Arm 3.01 m
GENERAL PURPOSE BUCKETS					
0.21	450	250	○	○	○
0.31	600	290	○	○	○
0.41	750	330	○	○	○
0.52	900	360	○	○	●
0.58	1000	400	●	●	▲
0.66	1100	430	●	▲	■
0.73	1200	450	▲	■	—
HEAVY DUTY BUCKETS					
0.21	450	350	○	○	○
0.31	600	400	○	○	○
0.42	750	460	○	○	●
0.45	800	470	○	○	●
0.52	900	510	○	●	▲
0.60	1000	550	●	▲	■
0.67	1100	580	▲	■	—
0.74	1200	620	■	—	—

Capacity m³ (ISO7451 HEAPED)	Width mm	Weight* kg	Arm 2.11 m	Arm 2.50 m	Arm 3.01 m
GRADING BUCKETS					
0.59	1500	440	●	●	■
0.72	1800	510	▲	■	—
0.80	2000	550	■	—	—
DITCH CLEANING BUCKETS					
0.54	1830	480	●	●	▲

* with bolt-on cutting edge
**Tilt angle 45° L/R Connect to Low-Flow Auxiliary Hydraulic Circuit

BUCKETS (PRELIMINARY)
CX130E LONG REACH

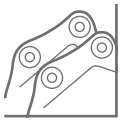

CX130E LR- Direct Mount

Capacity m³ (ISO7451 HEAPED)	Width mm	Weight kg	Arm 5.30 m
GENERAL PURPOSE BUCKET			
0.10	300	125	○
0.12	350	130	○
0.15	400	140	○
0.17	450	145	○
0.19	500	150	○
0.24	600	170	●
0.32	750	200	■
DITCH CLEANING BUCKET			
0.27	1200	170	●
0.35	1500	200	■

CX130E LR - Quick coupled

Capacity m³ (ISO7451 HEAPED)	Width mm	Weight kg	Arm 5.30 m
GENERAL PURPOSE SCOOP BUCKET			
0.10	300	125	○
0.12	350	130	○
0.15	400	140	○
0.17	450	145	○
0.19	500	150	○
0.24	600	170	●
0.32	750	200	■
DITCH CLEANING BUCKET			
0.27	1200	180	■

○ Rated material density up to 2 ton/m³
● Rated material density up to 1.6 ton/m³
▲ Rated material density up to 1.4 ton/m³
■ Rated material density up to 1.2 ton/m³
— Not applicable