FOREWORD

This manual is an important part of your equipment. It provides safety information and operation instructions to help you use and maintain your Ditch Witch Electronics equipment.

Read this manual before using your equipment. Keep it with the equipment at all times for future reference. If you sell your equipment, be sure to give this manual to the new owner.

If you need a replacement copy, contact your Ditch Witch Electronics dealer.

The descriptions and specifications in this manual are subject to change. The Charles Machine Works, Inc. reserves the right to improve equipment. Some product improvements may have taken place after this manual was published.

Thank you for buying and using Ditch Witch Electronics equipment.

750/752 Display - FOREWORD 1

FOREWORD

This manual is an important part of your equipment. It provides safety information and operation instructions to help you use and maintain your Ditch Witch Electronics equipment.

Read this manual before using your equipment. Keep it with the equipment at all times for future reference. If you sell your equipment, be sure to give this manual to the new owner.

If you need a replacement copy, contact your Ditch Witch Electronics dealer.

The descriptions and specifications in this manual are subject to change. The Charles Machine Works, Inc. reserves the right to improve equipment. Some product improvements may have taken place after this manual was published.

Thank you for buying and using Ditch Witch Electronics equipment.

Operator's Manual
750/752 Display

Issue No. 2.0/OP-2/05
Part Number S754-055

Copyright 2000, 2005
by The Charles Machine Works, Inc.,
Perry, Oklahoma

Ditch Witch®, Ditch Witch, CMW, AutoCrowd, Modularmatic, Jet Trac, Roto Witch, Subsite, Fluid Miser, Perma-Soil, Power Pipe, Super Witch, Super Witch II, Pierce Airrow, The Underground, and The Underground Authority Worldwide are registered trademarks of The Charles Machine Works, Inc.

U.S. Patent No. 5,065,098; 4,881,083. Other U.S. and foreign patents pending.

2 750/752 Display - FOREWORD

Operator's Manual
750/752 Display

Issue No. 2.0/OP-2/05
Part Number S754-055

Copyright 2000, 2005
by The Charles Machine Works, Inc.,
Perry, Oklahoma

Ditch Witch®, Ditch Witch, CMW, AutoCrowd, Modularmatic, Jet Trac, Roto Witch, Subsite, Fluid Miser, Perma-Soil, Power Pipe, Super Witch, Super Witch II, Pierce Airrow, The Underground, and The Underground Authority Worldwide are registered trademarks of The Charles Machine Works, Inc.

U.S. Patent No. 5,065,098; 4,881,083. Other U.S. and foreign patents pending.

CONTENTS

FOREWORD **1**

CONTROLS **5**

Overview 5

Display and Control Overview 6

Display and Control Descriptions 7

SPECIAL FUNCTIONS **13**

Change Time 13

Change Year 13

SETUP **15**

Safety 15

Mounting Options 15

Data Logging Options 16

FCC Statement 16

OPERATION MESSAGES. **17**

Low Display Battery Status 17

“Init” and Job Number 17

“OnPC” 17

SPECIFICATIONS **19**

WARRANTY **21**

750/752 Display - CONTENTS 3

CONTENTS

FOREWORD 1

CONTROLS 5

Overview 5

Display and Control Overview 6

Display and Control Descriptions 7

SPECIAL FUNCTIONS 13

Change Time 13

Change Year 13

SETUP 15

Safety 15

Mounting Options 15

Data Logging Options 16

FCC Statement 16

OPERATION MESSAGES 17

Low Display Battery Status 17

“Init” and Job Number 17

“OnPC” 17

SPECIFICATIONS 19

WARRANTY 21

4 750/752 Display - CONTENTS

CONTROLS

OVERVIEW

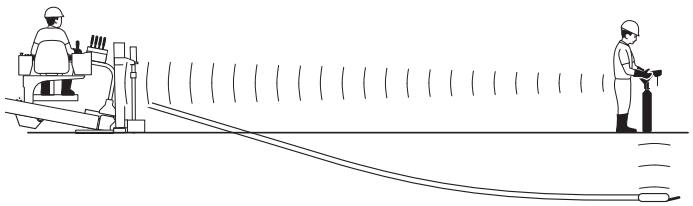

ss0009h.cdr

The 750/752 Display shows the drilling unit operator the same information the tracking operator sees up to 2000’ (610 m) away. It is designed for use with a 750/752 Tracker equipped with multi-channel UHF radio and any Ditch Witch beacon. The 750/752 Display also features an RS232 port for use with the Trac Management System option.

A brief description of the buttons and display on the 750/752 Display follows.

750/752 Display - CONTROLS 5
OVERVIEW

CONTROLS

OVERVIEW

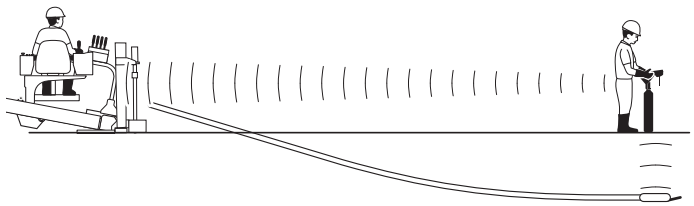

ss0009h.cdr

The 750/752 Display shows the drilling unit operator the same information the tracking operator sees up to 2000’ (610 m) away. It is designed for use with a 750/752 Tracker equipped with multi-channel UHF radio and any Ditch Witch beacon. The 750/752 Display also features an RS232 port for use with the Trac Management System option.

A brief description of the buttons and display on the 750/752 Display follows.

DISPLAY AND CONTROL OVERVIEW

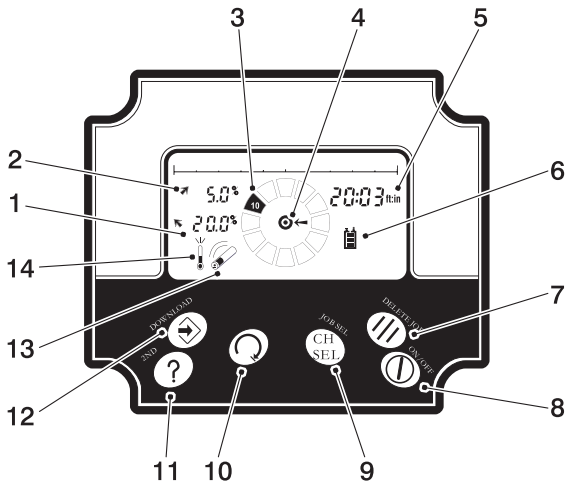

1. Beacon temperature display
2. Pitch/slope indicator and percentage (pipe number--TMS option) display
3. Roll display
4. Target identifier
5. Depth estimate display
6. Display battery status indicator
7. Delete button
8. On/off button
9. Channel select button
10. Roll stop button
11. Recall button
12. Store button
13. Beacon battery status indicator
14. Beacon temperature indicator

6
750/752 Display - CONTROLS
DISPLAY AND CONTROL OVERVIEW

DISPLAY AND CONTROL OVERVIEW

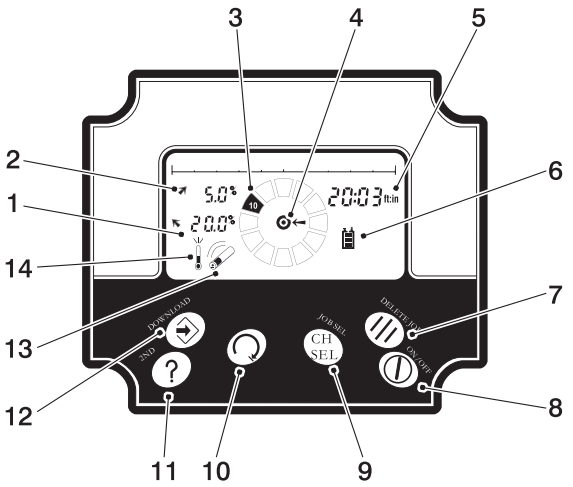

1. Beacon temperature display
2. Pitch/slope indicator and percentage (pipe number--TMS option) display
3. Roll display
4. Target identifier
5. Depth estimate display
6. Display battery status indicator
7. Delete button
8. On/off button
9. Channel select button
10. Roll stop button
11. Recall button
12. Store button
13. Beacon battery status indicator
14. Beacon temperature indicator

DISPLAY AND CONTROL DESCRIPTIONS

Beacon Temperature Display

This arrow and number show beacon temperature in °C or °F.

Pitch/Slope Indicator and Percentage (Pipe Number--TMS Option) Display

This arrow and number show pitch beacon's percent of grade. It also shows pipe number if using Trac Management System option.

Roll Display

This display shows beacon's roll angle as it relates to clock position.

Target Identifier

These arrows indicate approximate beacon location. Only one set of arrows (fore/aft or left/right) is active at a time.

750/752 Display - CONTROLS 7
DISPLAY AND CONTROL DESCRIPTIONS

DISPLAY AND CONTROL DESCRIPTIONS

Beacon Temperature Display

This arrow and number show beacon temperature in °C or °F.

Pitch/Slope Indicator and Percentage (Pipe Number--TMS Option) Display

This arrow and number show pitch beacon's percent of grade. It also shows pipe number if using Trac Management System option.

Roll Display

This display shows beacon's roll angle as it relates to clock position.

Target Identifier

These arrows indicate approximate beacon location. Only one set of arrows (fore/aft or left/right) is active at a time.

Depth Estimate Display

This display shows beacon depth estimate.

Display Battery Status Indicator

This indicator is used only when display unit is using C-cell battery power. Replace batteries when indicator flashes.

Beacon Battery Status Indicator

This indicator shows beacon’s battery status (see beacon’s instruction sheet).

Beacon Temperature Indicator

This indicator shows beacon’s temperature (see beacon’s instruction sheet).

8
750/752 Display - CONTROLS
DISPLAY AND CONTROL DESCRIPTIONS

Depth Estimate Display

This display shows beacon depth estimate.

Display Battery Status Indicator

This indicator is used only when display unit is using C-cell battery power. Replace batteries when indicator flashes.

Beacon Battery Status Indicator

This indicator shows beacon’s battery status (see beacon’s instruction sheet).

Beacon Temperature Indicator

This indicator shows beacon’s temperature (see beacon’s instruction sheet).

Delete Button

si1055a.eps

This button deletes last stored data.

- Press to delete information about current pipe.
- Previous pipe number will appear in numeric display when data is deleted.

Second function: Press with Recall button to delete all jobs in internal logging memory.

IMPORTANT: Download jobs before deleting.

On/Off Button

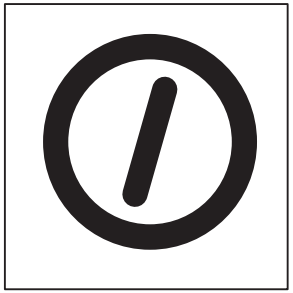
si1057a.eps

This button turns display unit on or off.

- Press to turn on.
- Press again to turn off.

750/752 Display - CONTROLS 9
DISPLAY AND CONTROL DESCRIPTIONS

Delete Button

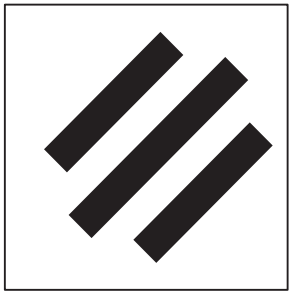
si1055a.eps

This button deletes last stored data.

- Press to delete information about current pipe.
- Previous pipe number will appear in numeric display when data is deleted.

Second function: Press with Recall button to delete all jobs in internal logging memory.

IMPORTANT: Download jobs before deleting.

On/Off Button

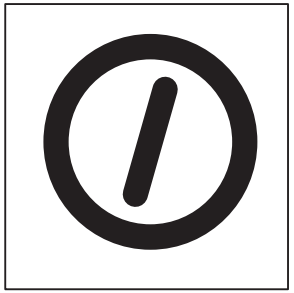
si1057a.eps

This button turns display unit on or off.

- Press to turn on.
- Press again to turn off.

Channel Select Button

si1058a.eps

This button selects between radio channels when unit is on.

- Press and release to display current channel.
- Press and hold to switch channels.

IMPORTANT: Make sure display and tracker are set to the same channel.

This button is used in time change mode. See “Change Time” section in **SPECIAL FUNCTIONS**.

Second function: Press with Recall button to select job to open. “Init” and job number will be displayed.

Roll Stop Button

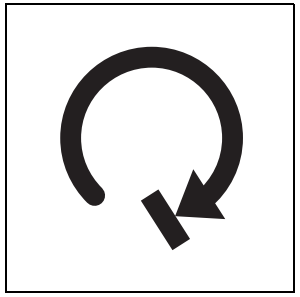
si1069a.eps

This feature is not yet available.

This button is used in year change mode. See “Change Year” section in **SPECIAL FUNCTIONS**.

10
750/752 Display - CONTROLS
DISPLAY AND CONTROL DESCRIPTIONS

Channel Select Button

CH
SEL
si1058a.eps

This button selects between radio channels when unit is on.
- Press and release to display current channel.
- Press and hold to switch channels.

IMPORTANT: Make sure display and tracker are set to the same channel.

This button is used in time change mode. See “Change Time” section in SPECIAL FUNCTIONS.

Second function: Press with Recall button to select job to open. “Init” and job number will be displayed.

Roll Stop Button

This feature is not yet available.

This button is used in year change mode. See “Change Year” section in SPECIAL FUNCTIONS.

si1069a.eps

Recall Button

This button allows operator to view last stored data.

- Press to view data about previous pipe in display.

Second function: Press with other buttons to access second functions.

si1066a.eps

Store Button

This button allows operator to store currently displayed data.

- Press and hold after power up to display serial number.
- Press to transmit data for TMS over the serial interface.
- Pipe number will appear in numeric display when data is stored.

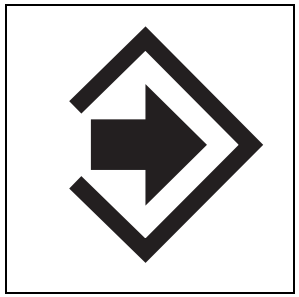

si1064a.eps

Second function: Press with Recall button to download all jobs stored in internal logging memory to Trac Management System.

750/752 Display - CONTROLS **11**
DISPLAY AND CONTROL DESCRIPTIONS

Recall Button

This button allows operator to view last stored data.

- Press to view data about previous pipe in display.

Second function: Press with other buttons to access second functions.

si1066a.eps

Store Button

This button allows operator to store currently displayed data.

- Press and hold after power up to display serial number.
- Press to transmit data for TMS over the serial interface.
- Pipe number will appear in numeric display when data is stored.

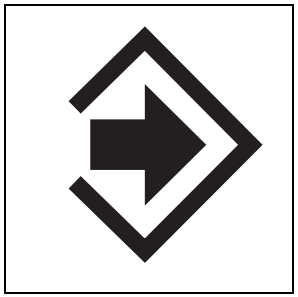

si1064a.eps

Second function: Press with Recall button to download all jobs stored in internal logging memory to Trac Management System.

12
750/752 Display - CONTROLS
DISPLAY AND CONTROL DESCRIPTIONS

SPECIAL FUNCTIONS

CHANGE TIME

To change time, day, and month:

1. Press and hold Channel Select button during power up. One digit of minutes will flash.
2. Press Channel Select button again to cycle through each of the remaining time digits, the day, and the month.
3. Press Roll Stop button to advance digits.
4. Press any other key to save changes, exit change mode and power unit off.

   IMPORTANT: If changes are made inadvertently, enter mode again to correct them.

CHANGE YEAR

To change year:

1. Press and hold Roll Stop button during power up. One digit will flash.
2. Press Roll Stop button to switch between units and tens position of year. The first two digits of the year are set automatically.
3. Press Channel Select button to advance digits.
4. Press any other key to save changes, exit change mode, and power unit off.

   IMPORTANT: If changes are made inadvertently, enter mode again to correct them.

750/752 Display - SPECIAL FUNCTIONS 13
CHANGE TIME

SPECIAL FUNCTIONS

CHANGE TIME

To change time, day, and month:

1. Press and hold Channel Select button during power up. One digit of minutes will flash.
2. Press Channel Select button again to cycle through each of the remaining time digits, the day, and the month.
3. Press Roll Stop button to advance digits.
4. Press any other key to save changes, exit change mode and power unit off.

   IMPORTANT: If changes are made inadvertently, enter mode again to correct them.

CHANGE YEAR

To change year:

1. Press and hold Roll Stop button during power up. One digit will flash.
2. Press Roll Stop button to switch between units and tens position of year. The first two digits of the year are set automatically.
3. Press Channel Select button to advance digits.
4. Press any other key to save changes, exit change mode, and power unit off.

   IMPORTANT: If changes are made inadvertently, enter mode again to correct them.

14
750/752 Display - SPECIAL FUNCTIONS
CHANGE YEAR

SETUP

SAFETY

IMPORTANT: Read tracker operator's manual and beacon instructions before using with 750/752 Display.

WARNING Explosion possible. Never operate transmitters near explosive devices or blasting operations.

NOTICE: Operating two-way radios within 2' (0.6 m) of either display or tracker can cause erratic operation.

MOUNTING OPTIONS

A 750/752 Display is mounted in all of the most recent Ditch Witch directional drilling unit operator's stations and receives power any time drilling unit key is in the on position.

The 750/752 Display unit is also available in a plastic case for use with older units or units sold by other manufacturers. To set up a 750/752 Display in a case, install batteries.

1. Loosen screws on battery cover.
2. Insert 6 "C" cell alkaline batteries.
3. Close cover and tighten screws.

Next, position the unit 2-3' (.5-1 m) above ground near drilling unit operator's station or in provided mount.

750/752 Display - SETUP 15
SAFETY

SETUP

SAFETY

IMPORTANT: Read tracker operator's manual and beacon instructions before using with 750/752 Display.

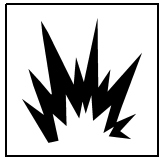

WARNING Explosion possible. Never operate transmitters near explosive devices or blasting operations.

NOTICE: Operating two-way radios within 2' (0.6 m) of either display or tracker can cause erratic operation.

MOUNTING OPTIONS

A 750/752 Display is mounted in all of the most recent Ditch Witch directional drilling unit operator's stations and receives power any time drilling unit key is in the on position.

The 750/752 Display unit is also available in a plastic case for use with older units or units sold by other manufacturers. To set up a 750/752 Display in a case, install batteries.

1. Loosen screws on battery cover.
2. Insert 6 "C" cell alkaline batteries.
3. Close cover and tighten screws.

Next, position the unit 2-3' (.5-1 m) above ground near drilling unit operator's station or in provided mount.

DATA LOGGING OPTIONS

Data can be sent through a serial interface to a PC running the Trac Management System software. Connect display to PC and open a job in Trac Management System before powering up display (see Trac Management System manual). Display will log data internally if PC is not connected before unit is powered up.

FCC STATEMENT

This equipment has been tested and found to comply with the limits for a Class B device, pursuant to Part 15 of the FCC rules. These limits are designed to provide reasonable protection against harmful interference in a residential installation. This equipment generates, uses and can radiate radio frequency energy and, if not installed and used in accordance with the instructions, may cause harmful interference to radio communications. However, there is no guarantee that interference will not occur in a particular installation. If this equipment does cause harmful interference to radio or television reception, which can be determined by turning the equipment off and on, the user is encouraged to try to correct the interference by one or more of the following measures:

- Reorient or relocate the receiving antenna.
- Increase the separation between equipment and receiver.
- Consult the dealer or an experienced radio/TV technician for help.

Shielded cables and I/O cords must be used for this equipment to comply with the relevant FCC regulations.

Changes or modifications not expressly approved in writing by **The Charles Machine Works, Inc.** may void the user’s authority to operate this equipment.

16
750/752 Display - SETUP
DATA LOGGING OPTIONS

DATA LOGGING OPTIONS

Data can be sent through a serial interface to a PC running the Trac Management System software. Connect display to PC and open a job in Trac Management System before powering up display (see Trac Management System manual). Display will log data internally if PC is not connected before unit is powered up.

FCC STATEMENT

This equipment has been tested and found to comply with the limits for a Class B device, pursuant to Part 15 of the FCC rules. These limits are designed to provide reasonable protection against harmful interference in a residential installation. This equipment generates, uses and can radiate radio frequency energy and, if not installed and used in accordance with the instructions, may cause harmful interference to radio communications. However, there is no guarantee that interference will not occur in a particular installation. If this equipment does cause harmful interference to radio or television reception, which can be determined by turning the equipment off and on, the user is encouraged to try to correct the interference by one or more of the following measures:

- Reorient or relocate the receiving antenna.
- Increase the separation between equipment and receiver.
- Consult the dealer or an experienced radio/TV technician for help.

Shielded cables and I/O cords must be used for this equipment to comply with the relevant FCC regulations.

Changes or modifications not expressly approved in writing by **The Charles Machine Works, Inc.** may void the user’s authority to operate this equipment.

OPERATION MESSAGES

LOW BATTERY STATUS

Flashing indicator signals low battery (3-4 hours of life remaining). If indicator flashes at power up, replace batteries.

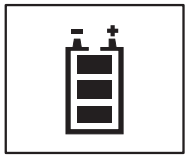

“Init” AND JOB NUMBER

This appears in display when recall and channel select keys are pressed. Unit can store 10 jobs of up to 254 drill pipes each before downloading.

“OnPC”

This appears in display if a job is initialized when unit is in external logging mode.

750/752 Display - OPERATION MESSAGES 17
LOW BATTERY STATUS

OPERATION MESSAGES

LOW BATTERY STATUS

Flashing indicator signals low battery (3-4 hours of life remaining). If indicator flashes at power up, replace batteries.

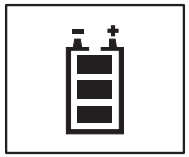

“Init” AND JOB NUMBER

This appears in display when recall and channel select keys are pressed. Unit can store 10 jobs of up to 254 drill pipes each before downloading.

“OnPC”

This appears in display if a job is initialized when unit is in external logging mode.

18 750/752 Display - OPERATION MESSAGES

SPECIFICATIONS

Dimensions

Module Only

- **Operating weight:** 2.5 lb (1.1 kg)
- **Power input**: 6.5 V dc - 16 V dc at approx. 150ma
- **Interface connectors:** DB-15P (D-series sub-miniature male)

Module with Case

- **Operating weight:** 6.5 lb (3 kg)
- **Battery:** 6 “C” cell alkaline
- **Interface:** MS5015 (7 pin)
- **Antenna:** TNC female
- **Battery life:** 20 hours

Display

roll	depth	beacon temperature
pitch	left/right	beacon battery status
beacon tracking arrows		

Radio

- **Type:** 750 Display - two channel, dual conversion, narrow-band FM
  752 Display - nine channel, dual conversion, narrow-band FM
- **Frequency range:** 420-470 mHz
- **Sensitivity:** -110dbm for 12db SINAD (typical)

750/752 Display - SPECIFICATIONS 19

SPECIFICATIONS

Dimensions

Module Only

- Operating weight: 2.5 lb (1.1 kg)
- Power input: 6.5 V dc - 16 V dc at approx. 150ma
- Interface connectors: DB-15P (D-series sub-miniature male)

Module with Case

- Operating weight: 6.5 lb (3 kg)
- Battery: 6 “C” cell alkaline
- Interface: MS5015 (7 pin)
- Antenna: TNC female
- Battery life: 20 hours

Display

roll depth beacon temperature
pitch left/right beacon battery status
beacon tracking arrows

Radio

- Type: 750 Display - two channel, dual conversion, narrow-band FM
  752 Display - nine channel, dual conversion, narrow-band FM
- Frequency range: 420-470 mHz
- Sensitivity: -110dbm for 12db SINAD (typical)

20 750/752 Display - SPECIFICATIONS

WARRANTY

Ditch Witch Electronics
Limited Product Warranty Policy

Warranty Periods

New Product

A twelve-month period starts on the date of delivery to the end user:

Trackers: 750/752 Tracker Remote Displays: 750/752 Display

A six-month period starts on the date of delivery to the end user:
Beacons: 86B, 86BH, 86BHL, 88B, 88B-AT

A three-month period starts on the date of delivery to the end user:
Accessories: canoes and adapters

Used Product (Cosmetics)

A three-month warranty starts on the date of delivery to the end user. (Non-returnable) All used products have an RS added after the serial number.

Service and Repair

A one-month warranty on **labor** starts on the date the unit is repaired, and a three-month warranty on **parts** starts on the date the unit is repaired for all products.

Extended Warranty

The extended warranty may be purchased at the time the equipment is sold or within thirty days of ownership. The extension is for an additional twenty-four months, for a total coverage of thirty-six months.

750/752 Display - WARRANTY 21

WARRANTY

Ditch Witch Electronics
Limited Product Warranty Policy

Warranty Periods

New Product

A twelve-month period starts on the date of delivery to the end user:

Trackers: 750/752 Tracker Remote Displays: 750/752 Display

A six-month period starts on the date of delivery to the end user:
Beacons: 86B, 86BH, 86BHL, 88B, 88B-AT

A three-month period starts on the date of delivery to the end user:
Accessories: canoes and adapters

Used Product (Cosmetics)

A three-month warranty starts on the date of delivery to the end user. (Non-returnable) All used products have an RS added after the serial number.

Service and Repair

A one-month warranty on labor starts on the date the unit is repaired, and a three-month warranty on parts starts on the date the unit is repaired for all products.

Extended Warranty

The extended warranty may be purchased at the time the equipment is sold or within thirty days of ownership. The extension is for an additional twenty-four months, for a total coverage of thirty-six months.

Details and Exclusions

- The warranty includes only Ditch Witch Electronics products and accessories that are manufactured and distributed by Ditch Witch Electronics. The warranty compensates on defects in material or workmanship.
- Defects will be determined through inspection by Ditch Witch Electronics or authorized repair centers. Original purchaser must make the defective item available for inspection within 30 days of the date the part fails.
- The warranty is limited to replacement of the defective part. The replacement part may be new or remanufactured. Repair and installation of defective part will be at no charge when product or item is delivered to Ditch Witch Electronics or an authorized repair center. The product or item will be returned at no charge for return freight.
- The warranty periods do not represent the useful life of Ditch Witch Electronics products and accessories.
- If Ditch Witch Electronics products are purchased for commercial purposes, as defined by the commerical code, no warranties extend beyond the specific terms set forth in this limited warranty. All other provisions of this limited warranty apply, including duties imposed.
- Ditch Witch Electroinics products have been tested to deliver acceptable performance in most conditions.
- This limited warranty applies to the original purchaser only. Some states or jurisdictions do not allow exclusion or limitation of incidental or consequential damages, so above limitation may not apply. This limited warranty gives original purchaser specific rights that vary from state to state or jurisdiction to jurisdiction.
- The Ditch Witch Electronics Equipment Registration Form must be completed for each serial numbered product and submitted to Ditch Witch Electronics. The information on the form is used to establish the warranty period start date.

22 750/752 Display - WARRANTY

Details and Exclusions

- The warranty includes only Ditch Witch Electronics products and accessories that are manufactured and distributed by Ditch Witch Electronics. The warranty compensates on defects in material or workmanship.
- Defects will be determined through inspection by Ditch Witch Electronics or authorized repair centers. Original purchaser must make the defective item available for inspection within 30 days of the date the part fails.
- The warranty is limited to replacement of the defective part. The replacement part may be new or remanufactured. Repair and installation of defective part will be at no charge when product or item is delivered to Ditch Witch Electronics or an authorized repair center. The product or item will be returned at no charge for return freight.
- The warranty periods do not represent the useful life of Ditch Witch Electronics products and accessories.
- If Ditch Witch Electronics products are purchased for commercial purposes, as defined by the commerical code, no warranties extend beyond the specific terms set forth in this limited warranty. All other provisions of this limited warranty apply, including duties imposed.
- Ditch Witch Electroinics products have been tested to deliver acceptable performance in most conditions.
- This limited warranty applies to the original purchaser only. Some states or jurisdictions do not allow exclusion or limitation of incidental or consequential damages, so above limitation may not apply. This limited warranty gives original purchaser specific rights that vary from state to state or jurisdiction to jurisdiction.
- The Ditch Witch Electronics Equipment Registration Form must be completed for each serial numbered product and submitted to Ditch Witch Electronics. The information on the form is used to establish the warranty period start date.

- When the Ditch Witch Electronics Equipment Registration Form is not processed and received by Ditch Witch Electronics, the Ditch Witch Electronics shipping date is used to establish the warranty period start date.
- Product inspection and estimates may require that the unit be disassembled and tested.
- Out-of-warranty inspection costs include labor accrued at the full labor rate plus return freight.
- Approved out-of-warranty repair costs include parts, labor accrued at full labor rate, plus return freight.

750/752 Display - WARRANTY 23

- When the Ditch Witch Electronics Equipment Registration Form is not processed and received by Ditch Witch Electronics, the Ditch Witch Electronics shipping date is used to establish the warranty period start date.
- Product inspection and estimates may require that the unit be disassembled and tested.
- Out-of-warranty inspection costs include labor accrued at the full labor rate plus return freight.
- Approved out-of-warranty repair costs include parts, labor accrued at full labor rate, plus return freight.

Revision E, January 2005

24 750/752 Display - WARRANTY

750/752 Display - 25