Instruction manual

4812325897EN
Operating & Maintenance

Vibratory Roller
CA25 / 30 / 35

Engine
Cummins QSF 3.8

Serial Number
From 10000179xxB007386 –

Reservation for changes
Printed in Brasil

TABLE OF CONTENTS

OPERATION **Page**

Introduction....4
Safety - General instructions....6
Safety - When operating....8
Special Instructions....9
Technical specifications....12
Noise/Vibrations/Electrical....12
Technical specifications - Dimensions....13
Technical specifications – Weights and volumes....15
Technical specifications – Working capacity....16
Technical specifications – General....17
Machine description....20
Product plate – Identification....22
Machine description – Decals....24
Machine description – Instruments/Controls....27
A/C – System operation....37
Operation - Starting....41
Operation - Driving....45
Operation – Vibration....46
Operation – Braking....49
Miscellaneous....53
Operating instructions - Summary....57
Preventive maintenance....58
Maintenance - Lubricants and symbols....59
Maintenance - Maintenance schedule....61
Scheduled maintenance and lubrication....62
Every 10 hours of operation (Daily)....62
Maintenance, after the FIRST 50 hours of operation....63
Every 50 hours of operation (Weekly)....63
Maintenance, every 250/750 hours of operation....63
Maintenance, every 500 hours of operation....64
Maintenance, every 1.000 hours of operation....64
Maintenance, every 2.000 hours of operation....65
Assembly instructions....111
Revision....114

Introduction

The machine

CA25 / 30 / 35 are models of Dynapac's medium-heavy soil compaction rollers. They are available in a D (smooth drum) and PD (padfoot) version.

Intended use

All types of base courses and subbase courses can be compacted. The PD version enables the use of either D or PD drums, which ensures greater flexibility for a wider range of applications.

Warning symbols

WARNING! Marks a danger or a hazardous procedure that can result in life threatening or serious injury if the warning is ignored

CAUTION! Marks a danger or hazardous procedure that can result in damage to the machine or property if the warning is ignored.

Safety information

The safety manual supplied with the machine must be read by all roller operators. Always follow the safety instructions. Do not remove the manual from the machine.

We recommend that the operator reads the safety instructions in this manual carefully. Always follow the safety instructions. Ensure that this manual is always easily accessible.

Read the entire manual before starting the machine and before carrying out any maintenance

Ensure good ventilation (extraction of air by fan) where the engine is run indoors

General

This manual contains instructions for machine operation and maintenance.

The machine must be correctly maintained for maximal performance.

The machine should be kept clean so that any leakages, loose bolts and loose connections are discovered at as early a point in time as possible.

Inspect the machine every day, before starting. Inspect the entire machine so that any leakages or other faults are detected.

Check the ground under the machine. Leakages are more easily detected on the ground than on the machine itself.

THINK ABOUT THE ENVIRONMENT! Do not dispose oil, fuel or other hazard substances to the environment. Always dispose correctly used filters, draining oil and fuel residues. Is prohibited dispose of tires in the environment. Dispose of waste tires at authorized collection points.

This manual contains instructions for periodic maintenance, can be performed by the machine operator.

Additional instructions for the engine can be found in the manufacture's engine manual.

CE marking and Declaration of conformity

(Applies to machines marketed in EU/EEC)

This machine is CE marked. This shows that on delivery it complies with the basic health and safety directives applicable for the machine in accordance with machinery directive 2006/42/EC and that it also complies with other regulations and directives applicable for this machine.

A "Declaration of conformity" is supplied with this machine, which specifies the applicable regulations and directives with supplements, as well as the harmonized standards and other regulations that are applied and according to the regulations must be declared in writing.

Safety - General instructions

(Also read the safety manual)

1. ***Read and understand this manual before starting and operate the machine. The operator must be familiar with the contents of the OPERATION section before starting the roller.***

2. ***Ensure that all instructions in the MAINTENANCE section are followed.***

3. ***Do not operate the machine if you are not qualified, by training or experience. Only the operator is allowed to be on the roller. Remain seated at all times when operating the roller.***

4. ***Never use the roller if it is in need of adjustment or repair.***

5. ***Only ascend and descend the roller when it is stationary. Use the intended footsteps, grips and rails. Always use the three-point grip (both feet and one hand, or one foot and both hands) when ascending or descending the machine. Never jump down from the machine.***

6. ***If the terrain stability conditions are irregular or dangerous, use the Roll Over Protection Structure (ROPS). Always use the seat belt with "ROPS".***

7. ***Drive slowly in sharp bends.***

8. ***Avoid driving across slopes. Drive straight up or straight down the slope. Operate the machine in first gear and always check the operation of the brakes.***

9. ***When operating the machine near the beginning of slopes or holes, make sure that at least 2/3 of the machine width is under compacted material.***

10. ***Make sure that there are no obstacles in the direction of travel, on the ground, in front of or behind the roller, or overhead.***

11. ***Drive particularly carefully on uneven ground.***

12. ***Use the available safety equipment. On machines equipped with ROPS, you must use the safety belt.***

13. ***Keep the roller clean. Clean any dirt or grease that accumulates on the operator platform immediately. Keep all signs and decals clean and legible.***

14. ***Safety measures before refueling:***
    - ***-Stop the engine;***
    - ***Do not smoke;***
    - ***No naked flames in the vicinity of the roller;***
    - ***Earth the filling equipment nozzle to the tank opening to avoid sparks.***

15. ***Before repairs or service:***
    - ***-Chock the drums/wheels;***
    - ***-Lock the articulation if necessary.***

16. ***Hearing protection is recommended if the noise level exceeds 85 dB(A). The noise level can vary depending on the equipment on the machine and the surface the machine is being used on.***

17. ***Do not make any changes or modifications to the roller that could affect safety. Changes are only to be made after written approval has been given by Dynapac***

18. ***Avoid using the roller before the hydraulic fluid has reached its normal working temperature. Braking distances can be longer than normal when the fluid is cold. See instructions in the STOP section.***

19. ***For your own protection always wear:***
    - ***Helmet;***
    - ***Working boots with steel toecaps;***
    - ***Ear protectors;***
    - ***Reflecting clothing / high visibility jacket;***
    - ***Working gloves***

Safety - When operating

Prevent persons from entering or remaining in the risk zone, i.e. a distance of at least 7 m (23 ft) in all directions from operating machines. The operator may allow a person to remain in the risk zone, however he/she must be attentive and operate the machine only when the person is fully visible or has given a clear indication of where he or she is.

Avoid driving across a slope. Drive straight up and down sloping ground.

Driving near edges

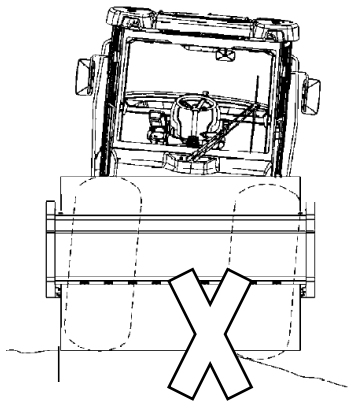

Fig. Incorrect positioning of the rollers when driving near the start of a slope.

Never operate with the drum outside the edge, the substrate might not have full bearing strength or the edge is close to a slope.

Keep in mind that the machine's center of gravity moves outwards when steering. For example, the center of gravity moves to the right when you steer to the left.

Work driving

To exit the cab in an emergency, release the hammer on the rear right post and break the rear window.

When operating on slopes or unstable bases, the use of ROPS (Roll Over Protection Structure) or a ROPS approved cabin is always recommended. Always use a seat belt.

Avoid operating close to edges and ditches and the like as well as on poor ground conditions that jeopardizes the bearing strength and capacity to support the roller. Pay attention to potential obstacles above the machine, such as overhead cables and the branches of trees etc.

Pay particular attention to the stability of the substrate when compacting close to edges and holes. Do not compact with a large overlap from the previous track in order to maintain roller stability. Consider other compaction methods such as remote-control or a walk-behind roller close to steep slopes or where the bearing strength of the substrate is unknown.

Special Instructions

Standard lubricants and other recommended oils and fluids

Before leaving the factory, the systems and components are filled with the oils and fluids specified in the lubricant specification. These are suitable for ambient temperatures in the range -15°C to +40°C (5°F - 105°F).

Higher ambient temperatures, above +40°C (104°F)

For operation of the machine at higher ambient temperatures, however maximum +50°C (122°F), the following recommendations apply:

The Diesel engine can be run at this temperature using normal oil, the following oils must be used:

Hydraulic system –mineral oil, Shell Tellus 15W40 or equivalent.

Lower ambient temperatures - Risk of freezing

Make sure that the cooling system is emptied/ drained (sprayer, hoses, tanks) or that anti-freeze has been added to prevent the system from freezing.

Temperatures

The temperature limits apply to standard versions of rollers.

Rollers equipped with additional equipment, such as noise suppression, may need to be more carefully monitored in the higher temperature ranges.

High pressure cleaning

Do not spray directly onto electrical components or control panel.

Place a plastic bag over the reservoir lid and seal with a rubber band. This prevents the water under pressure from passing through the vent hole in the lid. This could cause malfunctions, e.g. clogging of the filters.

When washing the machine, do not direct the water jet directly into the tank cover. This is especially important when using high-pressure jets.

Fire fighting

If the machine catches fire, use an BCD-class powder fire extinguisher. A BC-class carbon dioxide fire extinguisher can also be used.

Roll Over Protective Structure (ROPS), ROPS approved cab

If the machine is fitted with a Roll Over Protective Structure (ROPS, or ROPS approved cab) never carry out any welding or drilling in the structure or cab.

Never attempt to repair a damaged ROPS structure or cab. These must be replaced with new ROPS structure or cabs.

Welding

When carrying out welding on the machine, the battery must be disconnected and the electronics disconnected from the electrical system.

If possible, remove the part(s) to be welded from the machine.

Battery handling

When removing batteries, always disconnect the negative cable first.

When fitting batteries, always connect the positive cable first.

Dispose of old batteries in an environmentally friendly way. Batteries contain toxic lead.

Do not use a quick-charger for charging the battery. This may shorten battery life.

Jump starting

Do not connect the negative cable to the negative terminal on the dead battery. A spark can ignite the oxy-hydrogen gas formed around the battery.

Check that the battery used for jump starting has the same voltage as the dead battery.

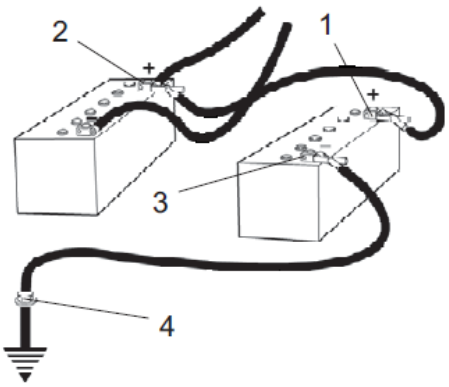

Fig. Jump starting

Turn the ignition and all power consuming equipment off. Switch off the engine on the machine which is providing jump start power.

First connect the jump start battery's positive terminal (1) to the flat battery's positive terminal (2). Then connect the jump start battery's negative terminal (3) to, for example, a bolt (4) or the lifting eye on the machine with the flat battery.

Start the engine on the power providing machine. Let it run for a while. Now try to start the other machine. Disconnect the cables in the reverse order.

Technical specifications
Noise/Vibrations/Electrical

Vibrations - Operator station
(ISO 2631)

The vibration levels are measured in accordance with the operational cycle described in EU directive 2000/14/EC on machines equipped for the EU market, with vibration switched on, on soft polymer material and with the operator's seat in the transport position.

Measured whole-body vibrations are below the action value of 0.5 m/s² as specified in Directive 2002/44/EC. (Limit is 1.15 m/s²).

Measured hand/arm vibrations also were below the action level of 2.5 m/s² specified in the same directive. (Limit is 5 m/s²).

Electrical system

The machine was tested for electromagnetic compatibility (EMC) in accordance with EN 13309:2000: "Construction machinery"

Noise level

The noise level is measured in accordance with the maximum limit described in Resolução Nº 433 do Conselho Nacional do Meio Ambiente – CONAMA, relative to compactor rollers, considering the connected vibration (high amplitude).

Guaranteed sound power level, LwA	111 dB (A)
Sound pressure level at the operator's ear (cab), LpA	85 dB (A)

During normal operations, the values abovementioned may differ, depending on the work specific conditions.

Technical specifications - Dimensions

Dimensions – Side view

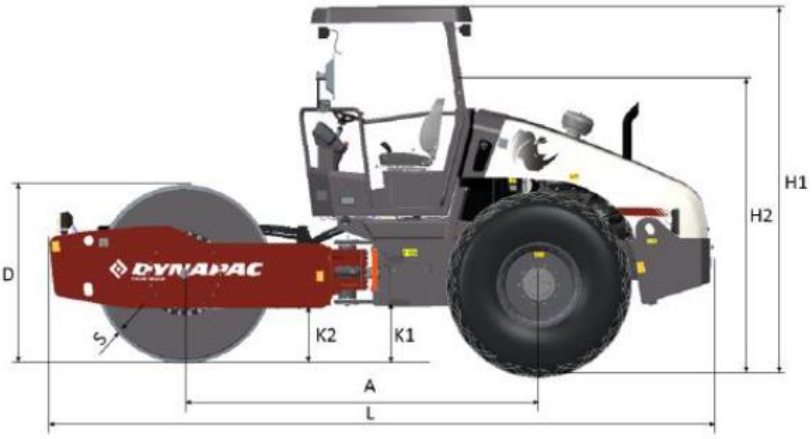

	Dimensions	mm	pol
A	Wheelbase, drum and wheel	2990	117,7
L	Length, standard equipped roller	5560	218,9
H1	Height, with ROPS/cab (D)	2890	113,8
H1	Height, with ROPS/cab (PD)	2890	113,8
H2	Height, without ROPS (D)	2400	94,5
H2	Height, without ROPS (PD)	2400	94,5
D	Diameter, drum (D)		
	CA25, CA30	1500	59
	CA35	1510	59,4
D	Diameter, drum (PD)	1694	66,7
S	Thickness, drum amplitude, Nominal (D)		
	CA 25, CA30	25	0,98
	CA35	30	1,2
S	Thickness, drum amplitude, Nominal (PD)	20	0,79
K1	Clearance, tractor frame	460	18,1
K2	Clearance, drum frame (D, PD)	460	18,1

Dimensions – Top view

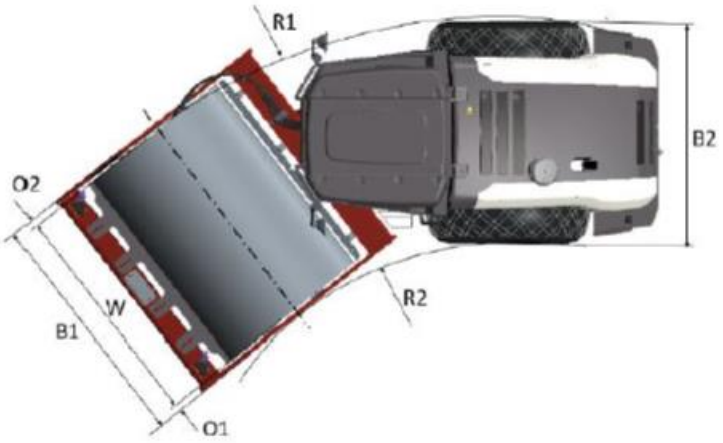

	Dimensions	mm	pol
B1	Width, front		
	CA25(PD/D), CA30(PD/D), and CA35 (PD)	2256	88,8
	CA35D	2276	89,6
B2	Width, rear	2130	83,9
O1	Overhang, left frame side		
	CA25(PD/D), CA30(PD/D), and CA35(PD)	63	2,48
	CA35 (D)	73	2,87
O2	Overhang, right frame side		
	CA25, CA30, and CA35 (PD)	63	2,48
	CA35 (D)	73	2,87
R1	Turn radius, external		
	CA25, CA30	5650	222,4
	CA35	5660	222,8
R2	Turning radius, inner		
	CA25(PD/D), CA30(PD/D), and CA35 (PD)	3255	128,1
	CA35 (D)	3245	127,8
W	Width, drum	2130	83,9

Technical specifications – Weights and volumes

Operational weight		Canopy	ROPS	Cab
CA25D	(kg)	10.300	10400	10500
	(lb)	22707	22928	23148
CA25PD	(kg)	10.500	10600	23369
	(lb)	23148	10700	23589
CA30D	(kg)	11.100	11.200	11.300
	(lb)	22471	24691	24912
CA30PD	(kg)	11.300	11.400	11.500
	(lb)	24912	25132	25353
CA35D	(kg)	12.100	12.200	12.300
	(lb)	26676	26896	27117
CA35PD	(kg)	12.500	12.600	12.700
	(lb)	27558	27778	27999

Fluid volumes	D/PD			
Rear axle				
- Differential	10	liters	10,6	qts
- Planetary gear (standard axle)	1,9	liters/each	2	qts/each
Drum gearbox	3	liters	3,2	qts
Cartridge	2,2	liters	2,3	qts/each
Hydraulic oil reservoir	55	liters	14,4	gal
Oil in the hydraulic system	80	liters	21,1	gal
Diesel engine oil	14,6	liters	15,4	qts
Diesel engine coolant	6,4	liters	1,7	gal
Fuel tank	250	liters	66	gal

Technical specifications – Working capacity

Compaction data

Static linear load (D)				
CA25	26	kg/cm	146	pli
CA30	30	kg/cm	168	pli
CA35	35	kg/cm	196	pli
Amplitude, High (D)				
CA25, CA30	1,8	mm	0,071	pol
CA35	1,7	mm	0,07	pol
Amplitude, High (PD)	2,0	mm	0,079	pol
Amplitude, Low (D)				
CA25, CA30	0,9	mm	0,035	pol
CA35	0,8	mm	0,031	pol
Amplitude, Low (PD)	1,1	mm	0,043	pol
Vibration frequency, amplitude high / low (D)	33	Hz	1.980	vpm
Vibration frequency, amplitude high / low (PD)	30	Hz	1.800	vpm
Centrifugal force, amplitude high (D)	250	kN	56,202	lb
Centrifugal force, amplitude high (PD)	270	kN	60,698	lb
Centrifugal force, amplitude low (D)	123	kN	27,651	lb
Centrifugal force, amplitude low (PD)	150	kN	33,721	lb

Technical specifications – General

Engine

Manufacturer/Model	Cummins QSF 3.8		Water-cooled turbo diesel engine	
Power (SAE J1995)	97	kW	130	hp
RPM engine, idling	900	rpm		
RPM engine, loading/unloading	1.600	rpm		
RPM engine, work/transport	2.200	rpm		

Traction	Speed range			
CA25	0 - 8	km/h (Dual Speed)	0 - 5	mph
CA30 e CA35	0 - 11	km/h (Traction Control)	0 - 6,8	mph

Electrical system

Battery	12V	170A
Alternator	12V	135A
Fuses	See the Electrical system section - fuses	

Tire	Tire dimensions:	Tire dimensions
Std. type	18,4 x 26,0 10 ply	180 kPa (1.8 kg/cm^2) (26psi)
Diamond type	23,1 x 26,0 12 ply	110 kPa (1.1 kp/cm^2) (16psi)
Tractor type	23,1 x 26,0 8 ply	110 kPa (1.1 kp/cm^2) (16psi)

Liquid-filled tires (extra weight up to 500 kg/tire, 1100 lbs/tire). When servicing, bear this extra weight in mind.

Hydraulic system

Opening pressure	Bar
Drive system	410
Supply system	25
Vibration system	370
Steering systems	160
Brake release	25

ROPS bolts

Bolts dimensions:	Front fixing M20x150 (PN 903633) Rear fixing M20x130 (PN 902282)
Strength class:	10.9
Tightening torque	800 Nm (With Dacromet® treatment)

The ROPS bolts that will be tightened should be dry.

Air Conditioning / Automatic Climate Control (ACC) (Optional)

The system described in this manual is an AC/ACC type (Automatic Climate Control). ACC is a system that maintains the set temperature in the cab, provided windows and doors are kept closed.

Coolant weight when full: 1.2 kg

Tightening torque

Tightening torque in Nm for oiled or dry bolts tightened with a torque wrench

Metric coarse screw thread, bright galvanized (fzb):

STRENGTH CLASS:

M - Thread	8,8 - Oiled	8,8 - Dry	10,9 - Oiled	10,9 - Dry	12,9 - Oiled	12,9 - Dry
M6	8,4	9,4	12	13,4	14,6	16,3
M8	21	23	28	32	34	38
M10	40	45	56	62	68	76
M12	70	78	98	110	117	131
M14	110	123	156	174	187	208
M16	169	190	240	270	290	320
M20	330	370	470	520	560	620
M22	446	497	626	699	752	839
M24	570	640	800	900	960	1080
M30	1130	1260	1580	1770	1900	2100

Metric coarse thread, zinc-treated (Dacromet/GEOMET):

STRENGTH CLASS:

M - Thread	10,9 - Oiled	10,9 - Dry	12,9 - Oiled	12,9 - Dry
M6	12	15	14,6	18,3
M8	28	36	34	43
M10	56	70	68	86
M12	98	124	117	147
M14	156	196	187	234
M16	240	304	290	360
M20	470	585	560	698
M22	626	786	752	944
M24	800	1010	960	1215
M30	1580	1990	1900	2360

Machine description

Diesel engine

The machine is equipped with a water-cooled, in-line four cylinders, four-stroke, turbocharged Diesel engine with direct injection and a charge air cooler.

Electrical system

The machine has the following control units (ECU, Electronic Control Unit) and electronic units.

•ECU (for the machine)
• Diesel engine control unit (ECM)
• Main display

Propulsion system/Transmission

The propulsion system is a hydrostatic system with a hydraulic pump supplying two motors connected in parallel, one for the rear axle and one for the drum.

The speed of the machine is proportional to the angle of the control lever (the deflection of the forward/reverse lever regulates the speed). A speed selector and anti-spin system are available as options.

Brake system

The brake system comprises a service brake, secondary brake and parking brake. The service brake system produces retardation of the propulsion system, i.e. hydrostatic braking.

Secondary/Parking brake

The secondary and parking brake system comprises sprung disc brakes on the rear axle and the drum gear which are disengaged by hydraulic pressure.

Steering system

The steering system is a load-sensing hydrostatic system. The control valve on the steering column distributes the flow to the steering cylinders at the articulated joint. The steering angle is proportional to the amount the steering wheel is turned.

Vibration system

The vibration system is a hydrostatic system in which a hydraulic motor drives the eccentric shaft, which generates the drum's vibrations.
High amplitude or low amplitude are determined by the hydraulic motor's direction of rotation. Optional systems for variable amplitude are available.

Cab

The cab has a heating and ventilation system, with defrosters for all windows. Air conditioning is available as an accessory.

Emergency exit

The cab has two emergency exits: the door and the rear cab window, which can be broken with the emergency hammer located in the cab.

FOPS and ROPS

FOPS is the abbreviation for "Falling Object Protective Structure" (roof protection) and ROPS is the abbreviation for "Roll Over Protective Structure".

The cab is approved as a protective cab in accordance with the FOPS and ROPS standards.
If any part of the cab's or the FOPS/ROPS structure's protective construction displays plastic deformation or cracks, the cab or the FOPS/ROPS structure must be replaced immediately.
Never perform unauthorized modifications on the cab or FOPS/ROPS structure without first having discussed the modification with Dynapac's production unit. Dynapac determines whether the modification could result in the approval according to the FOPS/ROPS standards becoming invalid.

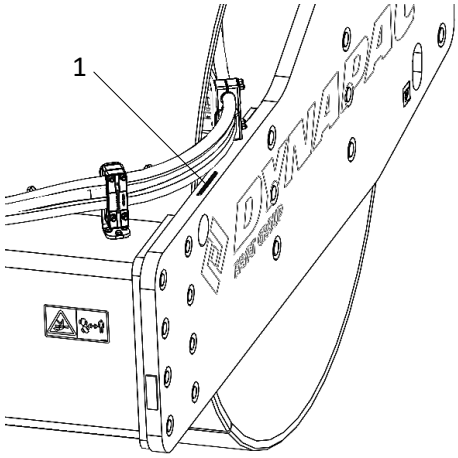

Fig. Front frame
1. PIN

Product plate – Identification

Product identification number on the frame

The machine PIN (product identification number) (1) is punched on the right edge of the front frame.

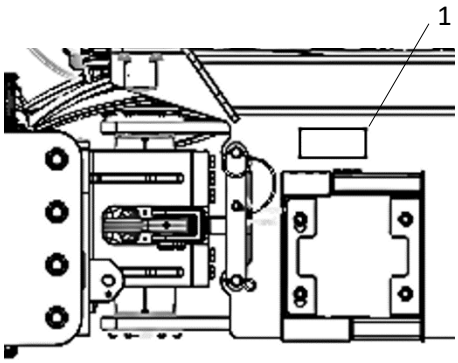

Fig. Rear frame
1. Machine data plate

Machine data plate

The machine data plate (1) is attached to the left side of the rear frame, beside the steering joint.

The plate specifies the manufacturer's name and address, the type of machine, the PIN product identification number (serial number), service weight, engine power and year of manufacture. (If the machine is delivered outside the EU there are no CE markings, and on some machines the year of manufacture may not be specified.)

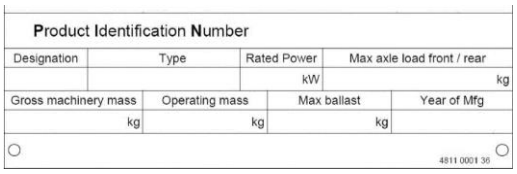

Product Identification Number			
Designation	Type	Rated Power	Max axle load front / rear
		kW	kg
Gross machinery mass	Operating mass	Max ballast	Year of Mfg
kg	kg	kg	

4811 0001 36

Please state the machine's PIN when ordering spares.

Explanation of PIN Serial Number

100	00123	V	E	B	123456
A	**B**	**C**	**D**	**E**	**F**

A = Manufacturer
B = Family / Model
C = Check letter
D = Manufacturing year
E = Production unit
F = Serial number

Engine plate

The engine plate (1) are affixed to the top of the engine.

The plate specifies the type of engine, serial number and the engine specifications.

Please specify the engine serial number when ordering spares. Refer also to the engine manual.

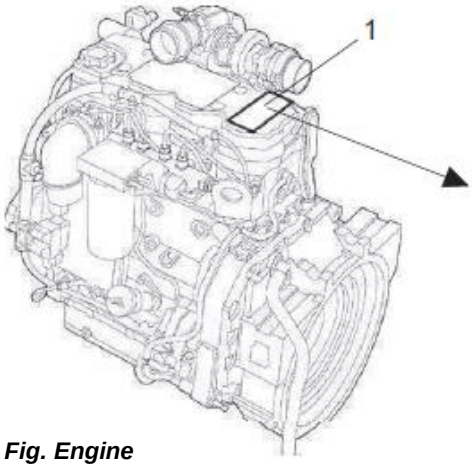

Fig. Engine
1. Engine plate

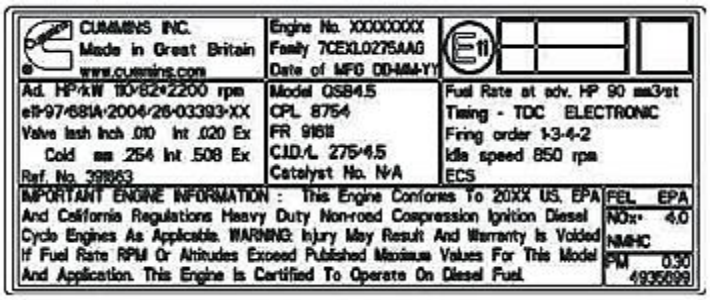

Machine description – Decals

Location – decals

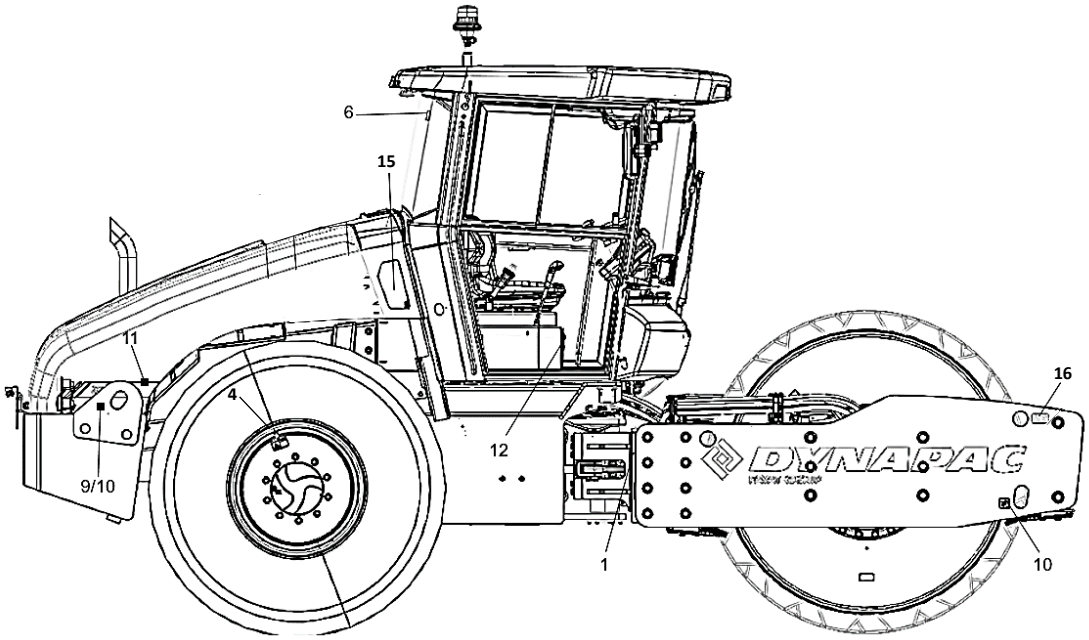

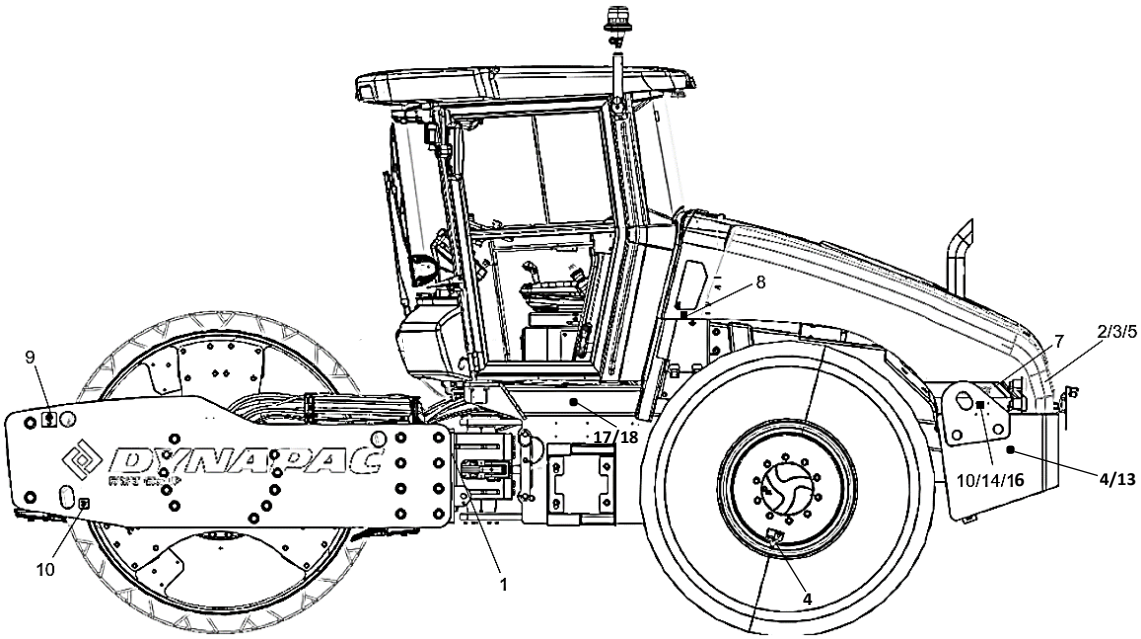

1. Warning, crush zone
2. Warning, rotating engine parts
3. Warning, hot surfaces
4. Warning, ballasted tires
5. Warning, starting gas
6. Emergency exit - cab
7. Diesel fuel
8. Hydraulic fluid
9. Lifting point
10. Fixing point
11. Master switch
12. Manual compartment
13. Tires pression
14. Hoisting plate
15. Coolant
16. Articulation lock
17. Warning, apply locking device
18. Warning, instruction manual

Safety decals

4700903422
Warning - Crush zone, articulation/drum.
Maintain a safe distance from the crush zone.

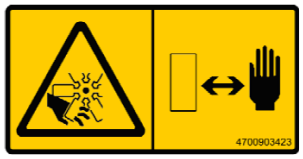

4700903423
Warning - Rotating engine components.
Keep your hands at a safe distance.

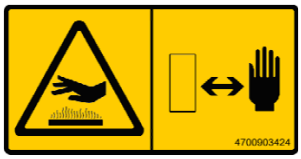

4700903424
Warning - Hot surfaces in the engine compartment.
Keep your hands at a safe distance.

4700903985
Warning - Ballasted tire.
Read the instruction manual.

4700903459
Warning - Instruction manual
The operator must read the safety, operation and maintenance instructions before operating the machine.

4700791642
Warning - Gas shall not be used to start the machine.

4700908229
Warning - Risk of crushing
The articulation must be locked when lifting. Read the instruction manual.

4812125363
Warning - Apply locking device
Articulated area, risk for crushing of body, apply locking device during lifting and transport.

4700903590
Emergency exit (Cab).

Info decals

Coolant

Diesel fuel

Lifting point

Hoisting plate

Manual compartment

Master switch

Hydraulic oil

Tire pressure

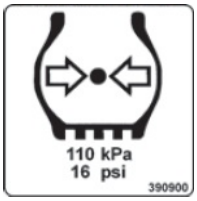

Securing point

Fire extinguisher

Machine description – Instruments/Controls

Locations – Instruments and controls

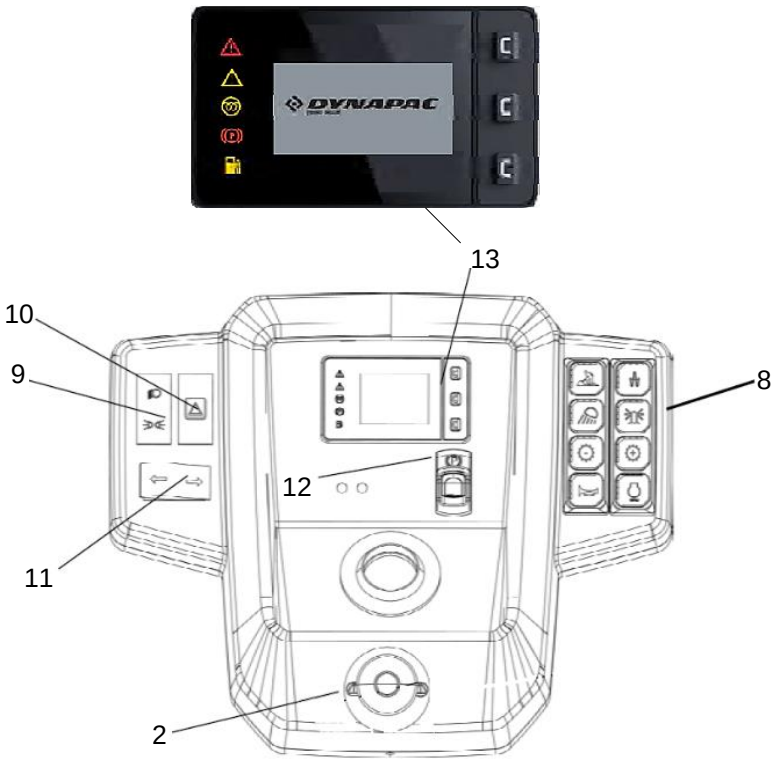

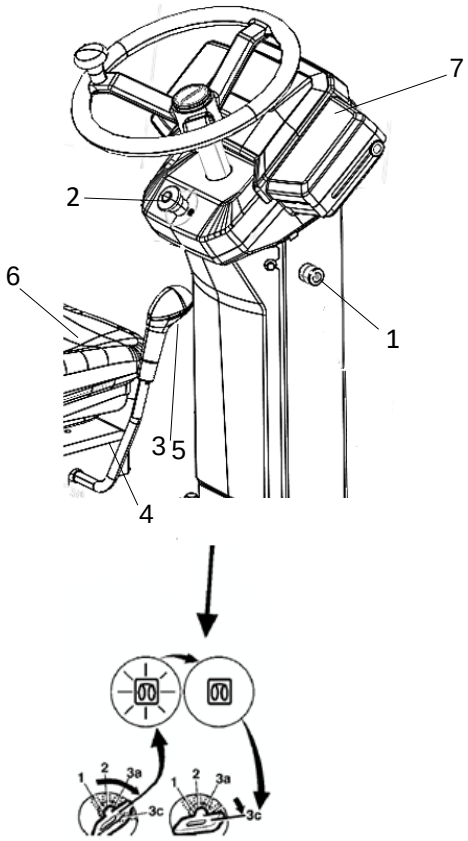

Fig. Instruments and control panel

1. Ignition switch
2. Emergency stop
3. Vibration on/off
4. Manual compartment
5. Forward & Reverse lever
6. Seat switch
7. Control protection
8. Membrane panel
9. Traffic lights switch
10. Warning lights switch
11. Direction indicators switch
12. Parking brake switch
13. Control panel

Machine description – Instruments/Controls

#	Designation	Symbol	Function
1.	Ignition key		Positions 1-2: Off position, the key can be removed. Position 3a: All instruments and electrical controls receive power. The machine is equipped with automatic heating, which occurs in this position. Position 3c: Starter motor activation.
2.	Emergency stop		Brakes the roller and switches off the engine. The power supply goes off. When starting the machine, the emergency stop must be inactive.
3.	Vibration on/off		To activate the vibration, simply press and release the button. Press again to turn the vibration off. First, you need to set high or low amplitude on the control panel.
4.	Manual compartment		Pull and open the top of the compartment to access the manuals.
5.	Forward & Reverse lever		When starting the machine, the lever must be in neutral. The engine cannot be started if the forward/reverse lever is in any other position. The forward/reverse lever controls both the roller's driving direction and speed. When the lever is moved forward, the roller moves forward; when the lever is move backward, the roller moves backward. The roller's speed is proportional to the distance the lever is from the neutral position. The further the lever is from the neutral position, the higher the speed.
6.	Seat switch		Stay seated whenever you operate the machine. When the operator stands up during operation, the alarm is triggered. After 3 seconds, the brakes are activated and the engine stops.
7.	Control protection		Below the instrument plate to protect from weather conditions and sabotage. Can be locked.
8.	Membrane panel		Detailed information on how it operates is given below.
9.	Traffic lights switch (optional)		When pressed in the top position, the traffic lights will be on. When pressed down in the lower position, the parking lights will be on.

#	Designation	Symbol	Function
10	Warning lights switch (optional)		When pressed, the warning lights will be on.
11.	Direction indicators switch (optional)		When pressed to one side, the respective indication lights up. In the central position, the function is turned off.
12.	Parking brake switch		Press the button to activate the parking brake; the machine stops the engine running. Always use the parking brake when the machine is on a sloping surface.
13.	Control panel		Detailed information on how it operates is given below.

Functional description - Membrane panel

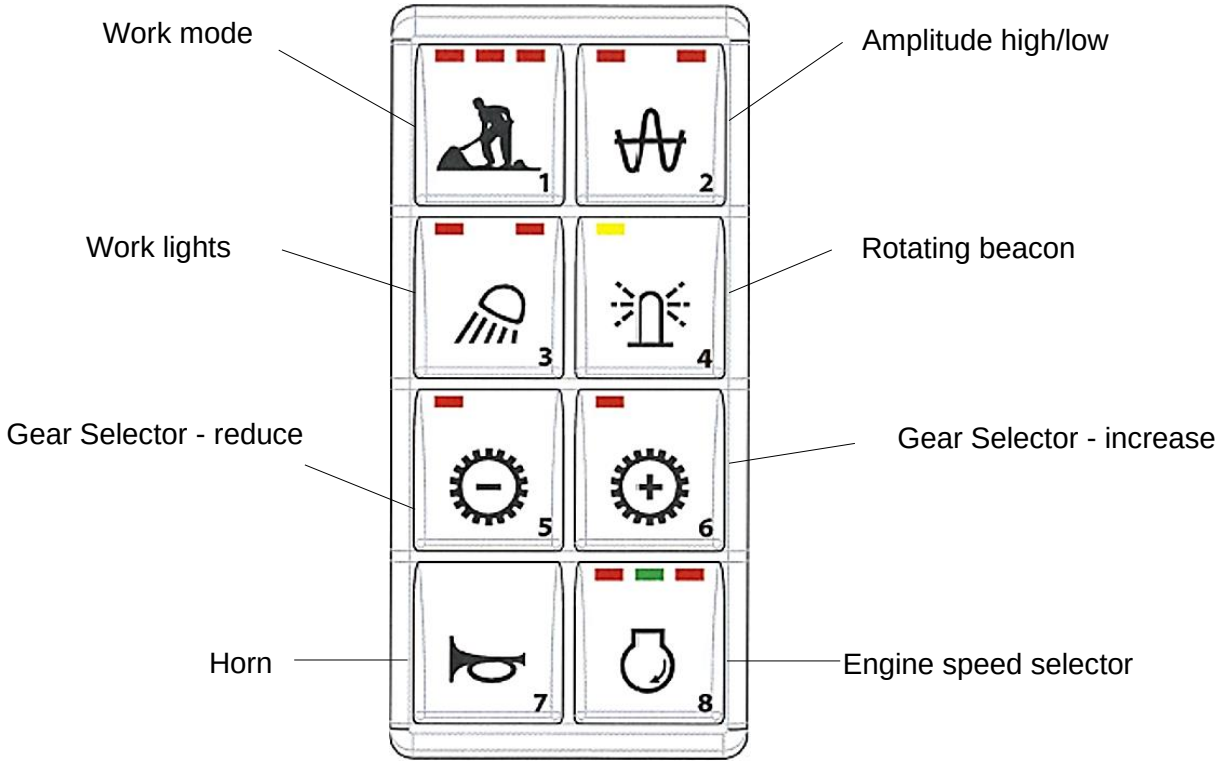

Symbol	Designation	Function	LED	LED Color
	Work Mode Vibration	Activates the working mode, which makes it possible to vibration use		
		TURN OFF LED → Transport Mode		-
		LEFT LED → Work Mode, vibration		Red
	Amplitude Selector	**LEFT LED →** Amplitude low		Red
		RIGHT LED → Amplitude high		
	Work Lights	Enables ROPS/Cabin work lights		
		TURN OFF LED →		-
		LEFT LED → Turn on the lights on the left side		Red
		RIGHT LED → Turn on the lights on the left and right side simultaneously.		

Symbol	Designation	Function	LED	LED Color
	Rotating beacon	Press to activate the rotating beacon		
		TURN OFF LED →		-
		LEFT LED → Turn on		Yellow
	Gear Selector – reduce	**TURN OFF LED →** Work mode		-
		LEFT LED → "Turtle" mode for speed reduction		Red
	Gear Selector - increase	Enables the machine change function		
		TURN OFF LED →		-
		LED ESQUERDO → "Hare" mode for speed increase		Red
	Horn	Press the button to sound the horn.		
	Engine speed selector	**LEFT LED →** low speed		Red
		CENTRE LED → Eco mode		Green
		RIGHT LED → high speed		Red

Functional description – Display

Fig. Start screen

When the ignition key is activated to position 1, a start screen is visible in display (Fig. 1). This is shown for a few seconds and then switches over to the status screen.
The transport mode menu appears when one of the three function keys on the right of the screen is activated.

Work mode

The work screen provides information on the direction of travel (2), hour meter (3) and fuel level (4).

Work direction

The icon has three options (F, N, R) and is located in the upper left corner of the Display (2).

➔ **N** (neutral) – Indicates that the lever is in the Neutral position.

➔ **F** (Forward) – An arrow facing left in front of the "F" appears on the display.

➔ **R** (Reverse) - An arrow facing right in front of the "R" appears on the display.

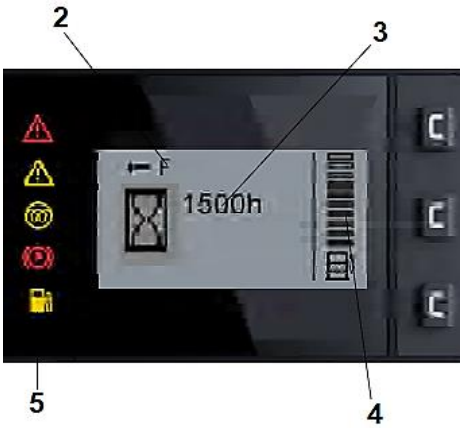

Fig. Transport mode

Hour meter

The "hourglass" icon appears on the left side of the screen indicating the hour meter. The number of hours appears to the right of the icon (3).

Fuel level

The fuel level is indicated in percentage % on the bar to the right of the display.

When you reach the first fuel bar (from bottom to top), it means that the system has 10% of its total capacity, so the warning led lights up indicating that you must refuel (5).

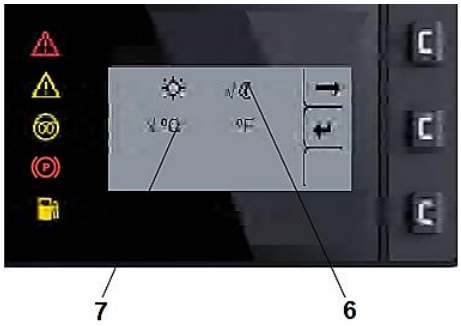

Fig. User settings

User settings

Users can change the light settings (6), choose between the Metric or Imperial system (7).

Work mode - Vibration

The selection of the different work modes takes place by pressing the respective button (2) on the Control Panel.

Compaction mode

Compacting status active on the roller (8).

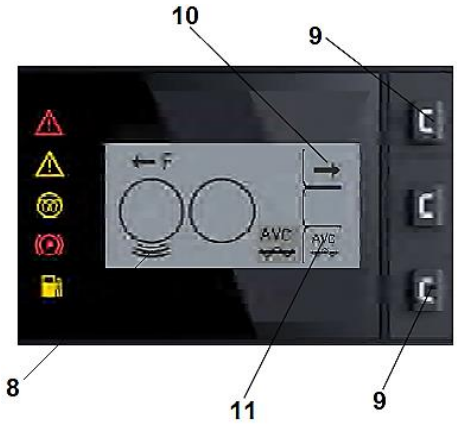

Fig. Work mode - Vibration

Automatic Vibration Control (AVC)

Press one of the buttons (9) on the end of the panel. An arrow will appear to the right (10).

Press the upper button (9) to display the submenu.

Pressing the lower button (9) activates the AVC (11) to which after activated its icon will appear in the lower right corner of the display. To activate the vibration, click on button (12).

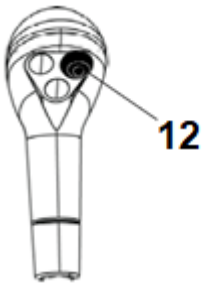

Machine with standard equipment

Fig. Forward Command

Fig. Submenu - Fault codes

Submenu - Fault codes

1. The alarm symbols are on the left side of the control panel. The red warning symbol is on the top and the yellow symbol is on the bottom (1).
2. The side menu appears when the submenu is selected.

Fig. Fault code list

3. Now pass to the user settings submenu.
4. The center button (4) on the side menu shows a downward arrow. Selecting this button brings up a list of error codes.
   When the last error code appears, scroll the list back up to the first error code.
5. The Active Start mode appears when you change the direction of the travel.
6. If the submenu remains inactive for more than 20 seconds, the screen will return to the Active Start menu.

7. When an "OK" appears in the box to the right below, the screen will go blank.
8. When you select "OK", the initial Active Start mode will appear.
9. A Red or Yellow control lamp acts as a reminder until the error is corrected.

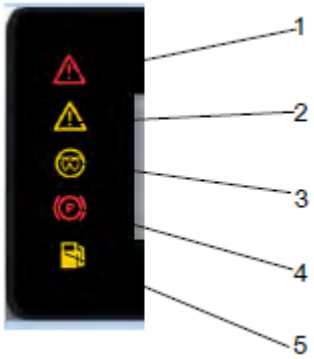

Functions description

#	Symbol	Designation and Function
1.		Warning lamp (Red) Serious fault: Shut down the engine immediately! It turns on along with a message on the screen.
2.		Warning lamp (Yellow) Less serious fault: Correct as soon as possible! It turns on along with a message on the screen.
3.		Heating (Yellow) The symbol must be erased before moving the ignition key to position 2 and activating the starter motor.
4.		Park brake indicator (Red) The lamp turns on when the parking brake is activated.
5.		Fuel level (Yellow) The symbol is turn on, there is less than 10% of the fuel left.

Locations – Control panel / controls / cab

Switch and Fuses

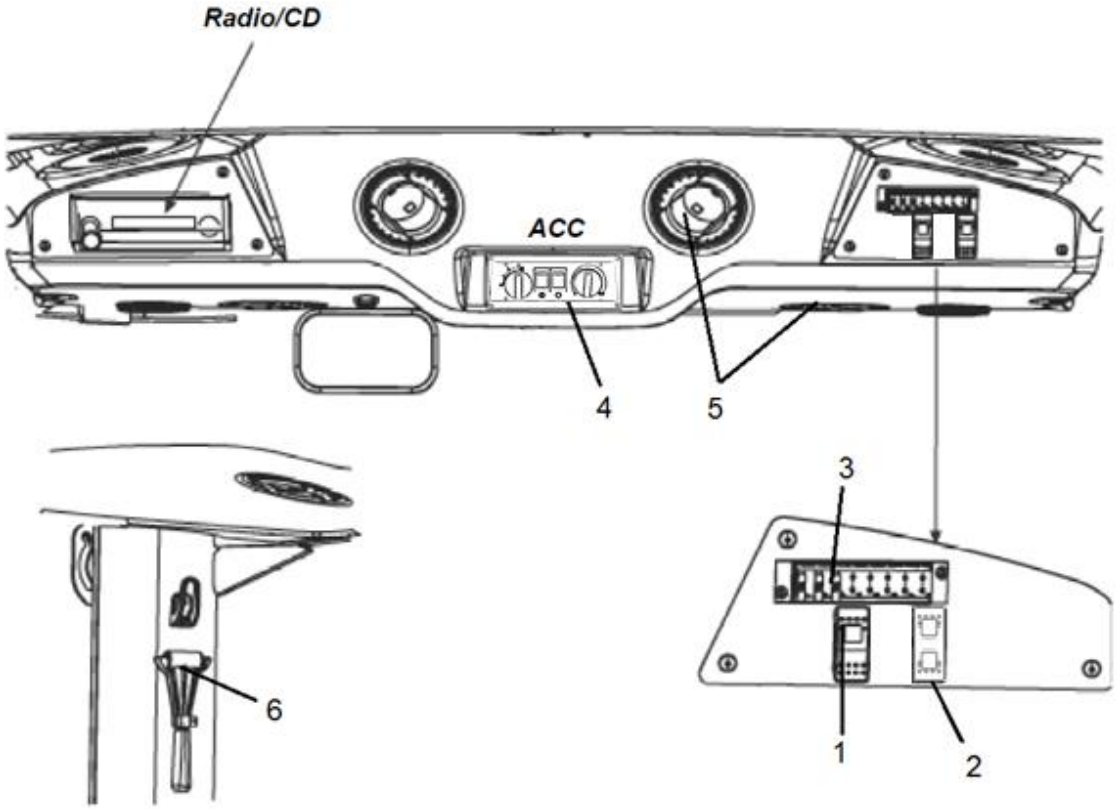

#	Designation	Symbol	Function
1.	Front wiper switch		Press to operate the front windshield wiper.
2.	Front and rear windshield washers switch		Press the top to activate the front washers. Press the bottom to activate the rear washers.
3.	Fuse box		Contains fuses from the electric system in the cab.
4.	Air conditioning (AC)		Analogic ventilation control (A).
			Analogic temperature control (D)
5.	Compressor switch		Actuates the air conditioning compressor (B)
6.	Cab air recirculation switch		Activates recirculation function, blocking external air entry (C)
5.	Defroster nozzle		Turn the defroster nozzle to direct the air flow.
6.	Hammer for emergency exit		To escape from the cab in an emergency, release the hammer and break the REAR glass.

A/C – System operation

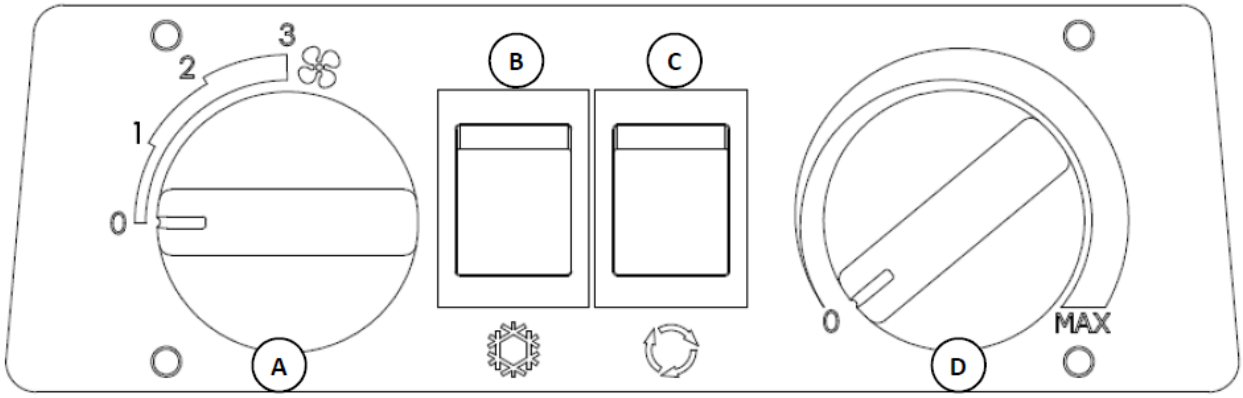

Introduction

This air conditioning system is designed to provide the operator of the equipment with safety and comfort during the performance of his work and, consequently, increase his productivity.

Commands

The air conditioning/heating system is operated through the control panel located on the right roof of the cabin. Through this control panel it is possible:

- Control fan speed **(selector A)**.
- Actuate the air conditioning compressor **(switch B)**.
- Activate recirculation function by blocking the external air entry **(selector C)**.
- Control the temperature by opening or closing the heating valve **(selector D)**.

Operation

Ventilation
To use the ventilation:

→ Set the **selector A** at the desired speed;
→ Keep the **switch B** turn off (top region);
→ Set the **selector C** at the desired position;
→ Keep the **selector D** in position 0.

Heating
To use the heating:

→ Set the **selector A** at the desired speed;
→ Keep the **switch B** turn off (top region);
→ Set the **selector C** at the desired position;
→ Set the **selector D** at the desired temperature.

Air Conditioning
To use the air conditioning:

→ Set the **selector A** at the desired speed;
→ Keep the **switch B** turn on (bottom region);
→ Set the **selector C** at the desired position;
→ Set the **selector D** at the position 0.

To obtain maximum cool down during hot days or when the machine has been in the sun for a long time, proceed as follows:

Open the windows for a few moments to allow the warm air present inside to be expelled quickly and after a few minutes of air conditioning, close the windows and slow down the fan so that a pleasant climate can be achieved inside the cabin.

To clear the windows on cold or rainy days, proceed as follows:

- Keep the windows closed.

- Open all defroster nozzles, directing them to the windows.

- Set the **selector A** at the speed 3.

- Keep the **switch B** turn on (bottom region).

- Keep the **selector C** at turn on position (bottom region).

- Set the **selector D** at the desired temperature.

- After a few minutes, slow down the fan so that a pleasant climate can be achieved inside the cabin.

The air conditioning only works with the machine's engine running and if the fan is on (at any speed).

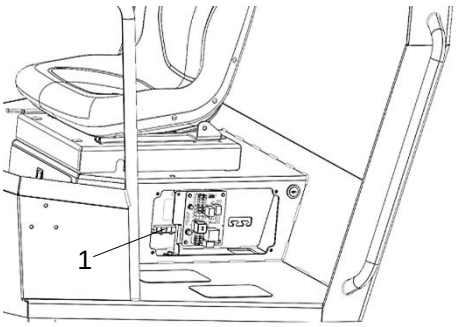

Fig. Steering compartment
1. Control unit (ECU)

Control unit

The control unit (ECU) (1) is located behind the front cover below the operator seat.
This unit is responsible for the operation of the steering electrical system, vibration, start / stop, etc.

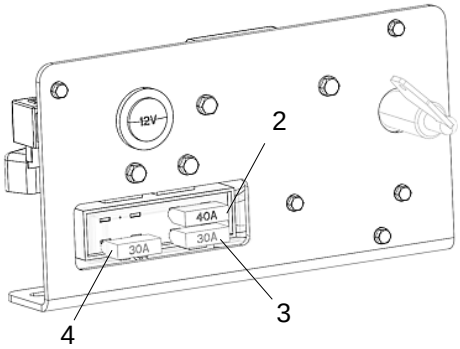

Fig. Engine compartment
2. Main fuse
3. Engine fuse
4. Cab fuse

Main fuses

There are three main fuses. They are located on the battery switch.
The fuse is a flat pin type.

Main power (2)	40A	(Orange, High).
Engine ECM (3)	30A	(Green)
Cab power (4)	30A	(Green)

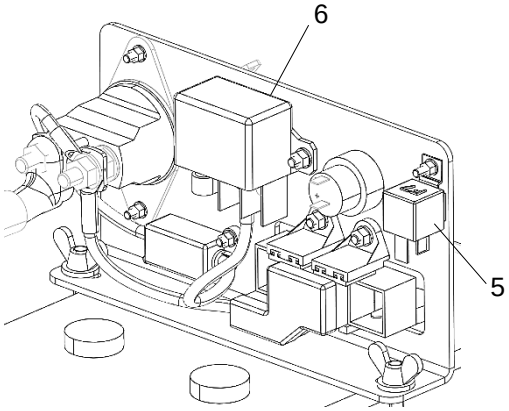

Fig. Engine compartment
5. Start relay
6. Pre-heating relay

The relays are located on the back of the battery switch, they are the start relay (3) and the pre-heating relay (4).

Relay

The table below shows the amperage and function of the fuses.

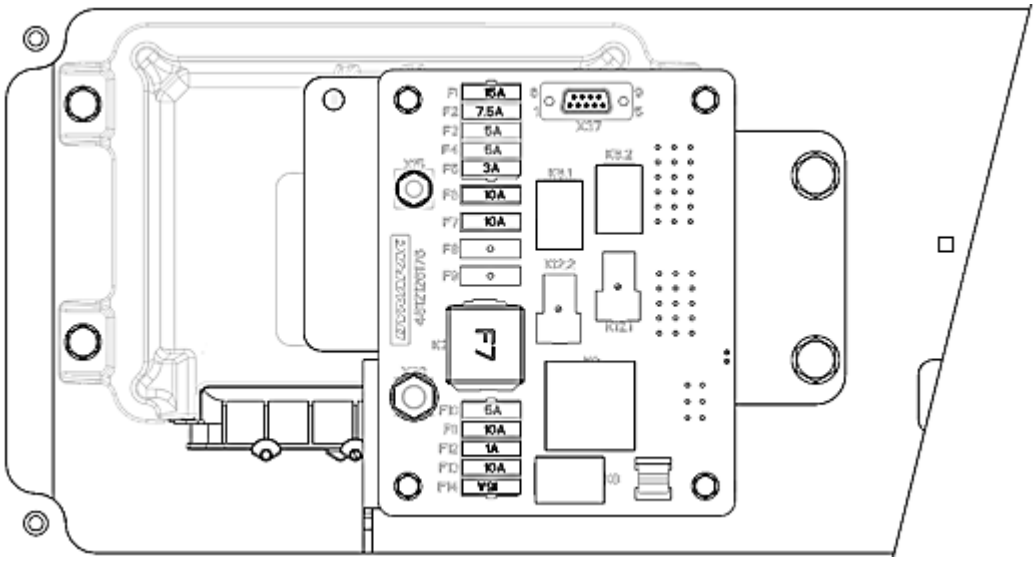

Fuse	Amperage	Function
F1	15A	Machine ECU
F2	7,5A	Machine ECU
F3	5A	Display, Keypad, Dyn@link, P-Brake Switch
F4	5A	Neutral switch, Seat switch, alternator, vibration switch (joystick)
F5	3A	Compaction Meter, Speed Sensor
F6	10A	Stereo System, Left Work Lights
F7	10A	Right Work Lights
F8	Spare	-
F9	Spare	-
F10	5A	Ignition switch
F11	10A	Power socket outlet (Platform and Rear), Dyn@link
F12	1A	ECU memory
F13	10A	Direction Indicators
F14	15A	Headlights, Position Lights
K2		Main Relay
K6.1		Right Work Lights
K6.2		Left Work Lights
K8		Headlights, Position Lights
K9		Direction Indicators
K12.1		-
K12.2		-

Operation - Starting

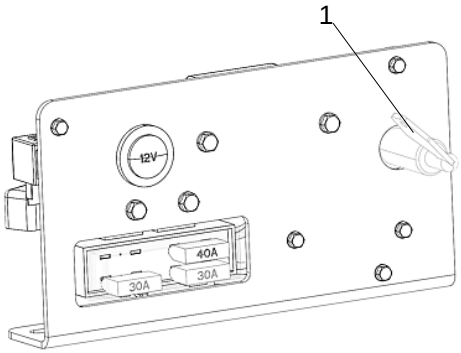

Fig. Engine compartment
1. Battery master switch

Before starting

Master switch - Switching on

Remember to carry out daily maintenance. Refer to the maintenance instructions.

The battery master switch is located in the engine compartment. Open the engine cover and insert the key in the operating position. The entire machine circuit is powered.

In order to be able to cut the battery's electrical current quickly if necessary, the engine canopy must remain unlocked during operation.

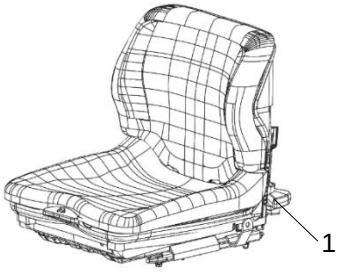

Fig. Operator's seat
1. Longitudinal adjustment

Operator's seat (standard) - Adjustment

Adjust the operator’s seat so that the position is comfortable and so that the controls are within easy reach.

There is a scale (50-130 Kg) that can be changed according to the weight of the operator. The seat can be adjusted longitudinally (1) only from top to bottom, to return to the initial position, just move the selector until the end of the weight scale.

Always make sure that the seat is secure before beginning operation.

Always use the seatbelt.

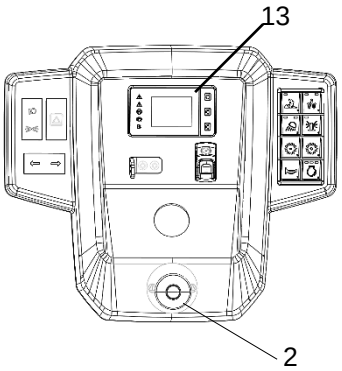

Fig. Instruments panel:
2. Emergency stop;
13. Control panel;

Before starting

Check whether the emergency stop button (2) is pulled out.

When the machine is in neutral or when there is no load on the operator's seat, the automatic brake function is activated.

Pull out the emergency button (2).
Turn the key to position 3.
Check that the panel warning lights (13) are turn on.

Operator position

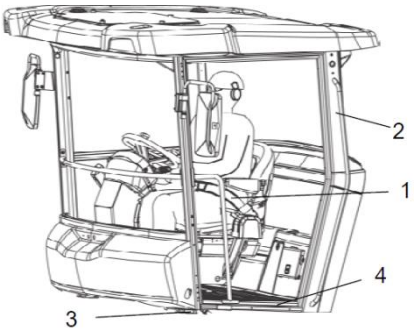

Fig. Operator's station:
1. Seat belt;
2. ROPS structure;
3. Rubber element;
4. Anti-slip.

If a ROPS (2) (Roll Over Protective Structure) or a cab is fitted to the roller, always wear the seat belt (1) provided and wear a protective helmet.

Replace the seat belt (1) if it shows signs of wear or has been subjected to high levels of force.

Check that rubber elements (3) on the platform are intact. Worn elements will impair comfort.

Ensure that the anti-slip (4) on the platform is in good condition. Replace where anti-slip friction is poor.

If the machine is fitted with a cab, make sure that the door is closed when in motion.

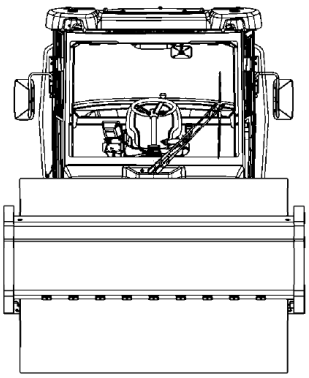

Fig. View

View

Before starting, make sure that the view forwards and backwards is unobstructed.
All cab windows should be clean and the rear-view mirrors should be correctly adjusted.

Interlock

The roller is equipped with Interlock.
The Diesel engine with switch off after 4-7 seconds if the operator gets off the seat when going forwards/backwards.
If the parking brake is activated, the diesel engine will not stop if the forward/reverse lever is moved out of neutral.

Sit down for all operations!

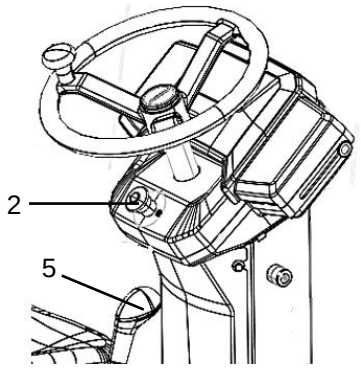

Fig. Control panel:
2. Emergency shut-off;
5. Forward-Reverse lever;

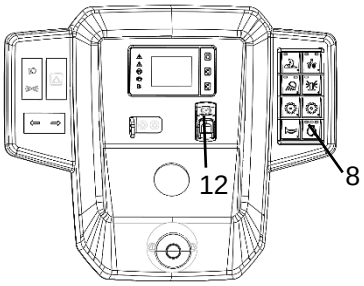

Fig. Control panel
12. Parking brake
8. Speed selector.

Starting the Diesel engine

Make sure the emergency stop button (2) is pulled.
Make sure the parking brake switch (12) is on.
The forward/reverse lever (5) shall be in the neutral position. The Diesel engine cannot be started if the lever is not in this position.
Set the speed selector (8) in the low idling position.
Pre-warm up: turn the key to position II. When the display heating symbol goes out, set the start switch to position 3c. As soon as the motor starts, release the start switch.

Do not try to run the start engine for too long. If it does not work, wait 60 seconds to try again.

At the start of the Diesel engine when the ambient temperature is below +10 ° C (50 ° F), it must be warmed up at idle (low speed) until the hydraulic oil temperature exceeds +10 ° C (50 ° F).

With a temperature below 0°C (32°F), the Diesel engine and hydraulic system must be heated for at least 15 minutes.

When starting and driving a machine that is cold, remember that the hydraulic fluid is also cold and that braking distances can be longer than normal until the machine reaches the working temperature.

When the engine is running indoors, make sure if there is proper ventilation to extract the exhaust gases.

Operation - Driving

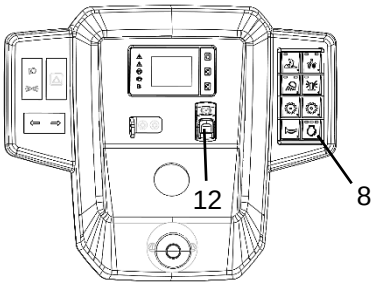

Fig. Control panel
1. *Ignition switch;*
2. *Emergency stop;*
5. *Forward-Reverse lever;*
8. *Speed selector;*
12. *Parking brake switch.*

Operating the roller

Under no circumstances is the machine to be operated from the ground. The operator must be seated inside the machine during all operation.

Set the speed selector (8) to the high operating position.

Release the parking brake (12).

Check that the steering is working correctly by turning the steering wheel once to the right and once to the left while the roller is stationary.

Make sure that the area in front of and behind the roller is clear.

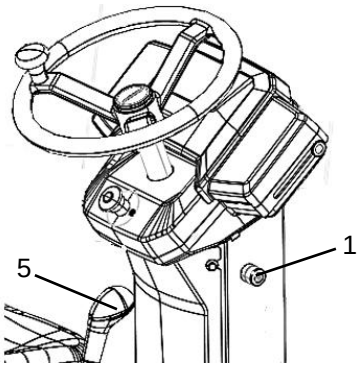

Fig. Control panel
1. *Ignition switch;*
6. *Forward-Reverse lever;*

Carefully move the forward/reverse lever (5) forwards or backwards, depending on which direction of travel is required.

Speed increases as the lever is moved away from the neutral position.

The speed should always be controlled by the front/rear lever, never changing the engine speed.

Test the emergency stop by pressing the relevant button (2) with the machine at low speed. Prepare for a sudden stop. The motor will stop and the brakes will be activated.

During operation, check that the warning lamps turn on.

Operation – Vibration

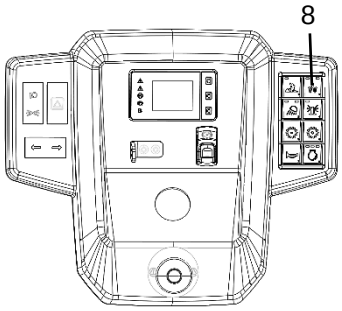

Fig. Control panel:
8. Amplitude switch.

Vibration switch

To activate or deactivate the vibration, activate the high or low amplitude selector (8).

The operator must activate it by the vibration switch, located on the underside of the forward-reverse lever.

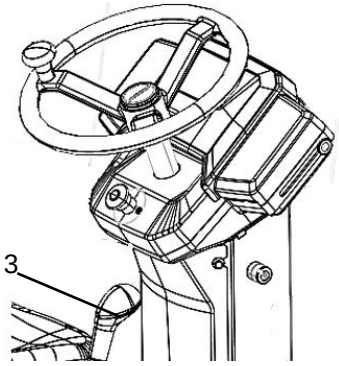

Fig. Forward-Reverse lever:
3. Vibration switch.

Vibration – Switching on

Never activate vibration when the roller is stationary. This can damage both the surface and the machine.

Engage and disengage vibration using the switch (3) on the bottom of the forward-reverse lever.
Vibration should only be activated at high or low speed.
Always switch off vibration before the roller comes to a standstill.

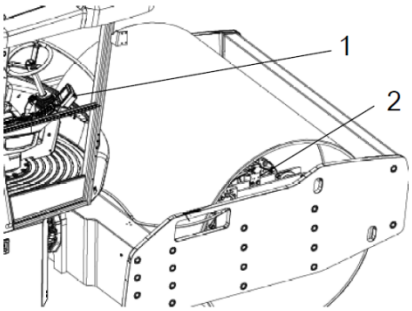

Fig. Main components:
1. *Display of CMV*
2. *Sensor and process unit.*

Dynapac Compaction Meter (DCM) including Active Bouncing Control (ABC) - Optional

The Compaction Meter is an accessory used to ensure the compaction result and enables optimal material processing. Your system allows you to choose different types of materials as a parameter, adapting the system to the material being compacted. If the Compaction Meter is mounted on the machine, a separate view in the machine display indicates the stiffness of the surface as a compaction meter value (CMV).

The Active Bouncing Control is always integrated in the Compaction Meter and after a certain warning time shuts off vibration if the machine is run in double-jump (bouncing). This is to save both machine and material as well as the operator from damages when the machine starts to double-jump.

The Compaction Meter is available for both D and PD machines but as the ground contact area varies a lot on PD the readings may not give any sure conclusions. However, ABC is still active. The ABC is only possible to disable via the service tool.

Setting CMV limit

The compaction meter value view in display will give the operator all information needed during compaction; engine rpm, gear position, speed, frequency and inclinations are in display together with actual CMV and the limit set in brackets. Use the buttons underneath the display to set the limit. The scale will automatically vary between 0-75 and 0-250 depending on the current readings.

If double-jump occurs the operator will first get a warning (!).

The sensor is fitted on the mounting plate of the main bearing and it senses the vibrating motion of the drum. The information is transmitted to the processor unit where it is analyzed.

The analyzed information is presented in the display as a digital value expressed as CMV (Compaction Value). High or low measuring range is automatically selected and viewed in the display. The resulting numerical value is a relative measure of the ground stiffness achieved.

Operation CMV

The Compaction Meter measures the dynamic stiffness of the ground and presents a value based on this. The CMV is influenced by the rolling speed, rolling direction (forward or reverse), amplitude setting and vibration frequency. The Dynapac Compaction Meter (DCM) is less sensitive to small variation in vibration frequency.

Some CMV references for compacted materials:

Material	CMV
Rocking	40 - 200
Gravel	25 - 100
Sand	20 - 60
Silte	5 -30
Clay	0 - 80

The water content in the compacted soil (not relevant for rock fill) has a large influence on stiffness, wet soil will result in low values and dry soil will result in higher values.

When double-jump occurs, the value CMV will be reduced, these lower values should not be used to determine if compaction is ready or not.

NOTE: The operator shall always keep an eye on where they are driving and not focus too much on the CMV display, due to safety.

Operation – Braking

Braking

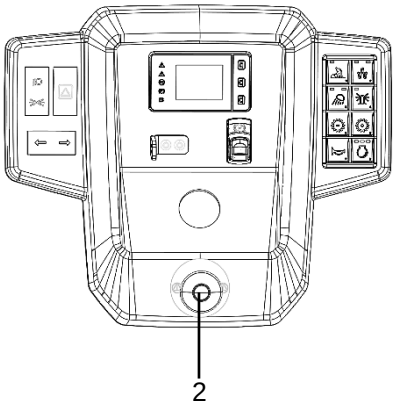

Fig. Control panel:
2. Emergency stop.

Emergency braking

Braking is normally activated using the forward-reverse lever. The hydrostatic transmission retards and slows the roller when the lever is moved towards the neutral position.

There is also a brake on the engine and rear axle of the machine which acts as an emergency brake during operation.

For emergency braking, press the emergency stop (2), hold the steering wheel firmly and be prepared for a sudden stop. The engine stops.

After emergency braking, return the forward-reverse lever to neutral and pull the button (1). If the machine is equipped with the Interlock function, it will be necessary to occupy the operator's seat for the engine to start again.

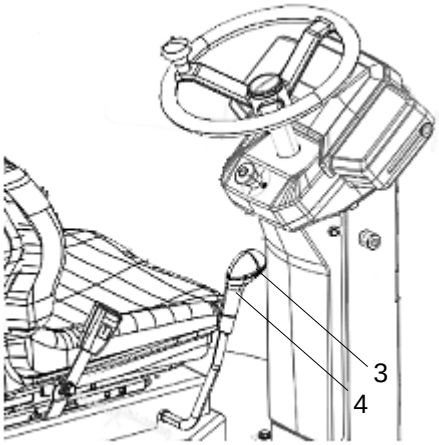

Fig. Control panel:
3. Vibration switch;
4. Forward-reverse lever;

Normal braking

Press the switch (3) to switch off the vibration.

Move the forward-reverse lever (4) to the neutral position to stop the roller.

Set the speed control regulator to the idle, low position.

Set the parking brake switch to active position.

Always use the parking brake when the machine is standing on sloping ground.

When starting and driving a machine that is cold, remember that the hydraulic fluid is also cold and that braking distances can be longer than normal until the machine reaches the working temperature.

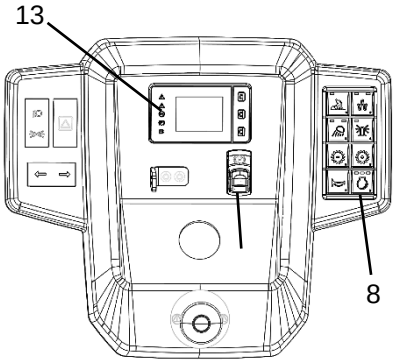

Switching off

Check the controls and warning lamps to see if there are any indications of malfunction (13). Turn off all lights and other electrical functions.

Set the speed selector (8) to neutral and let the engine run for about one minute.

Activate the parking brake (3).

Turn the ignition key to left to the off position 1. At the end of the work turn, and lock the control panel cover.

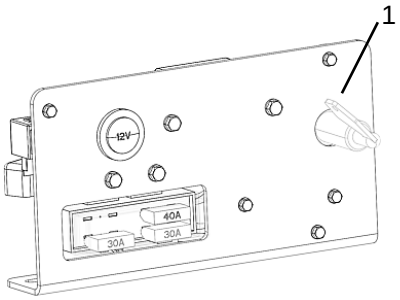

Parking

Master switch

Before leaving the roller for the day, switch the master switch (1) to the disconnected position and remove the key. This will prevent battery discharging and will also make it difficult for unauthorized persons to start and operate the machine. Also lock the hood to the engine compartment.

Chocking the drums

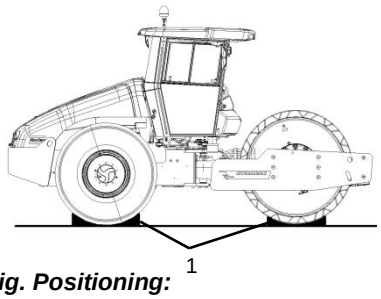

Fig. Positioning:
1. Chocks.

Never disembark from the machine when the is engine running, unless the parking brake is activated.

Make sure that the roller is parked in a safe place with respect to other road users. Chock the drums if the roller is parked on sloping ground.

Remember the risk of freezing during the winter. Fill the engine cooling system and the screen wash bottle in the cab with suitable anti-freeze mixtures. See also the maintenance instructions.

Long-term parking

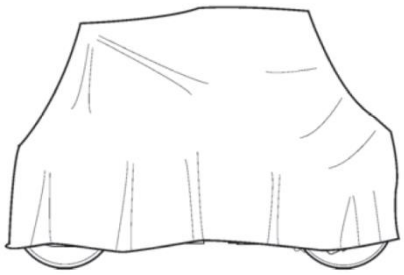

Fig. Roller weather protection.

The following instructions should be followed when long term parking (more than one month).

These measures apply when parking for a period of up to 6 months.

Wash the machine and touch up the paint finish to avoid rusting.

Treat exposed parts with anti-rust agent, lubricate the machine thoroughly and apply grease to unpainted surfaces.

Engine

*Refer to the manufacturer's instructions in the engine manual that is supplied with the roller.

Battery

Dismantle the battery from the machine. Clean the battery, check that the electrolyte level is correct and give it a maintenance charge once a month.

Air cleaner, exhaust pipe

Cover the air cleaner or its opening with plastic or tape. Also cover the exhaust pipe opening. This is to avoid moisture entering the engine.

Fuel tank

Fill the fuel tank completely full to prevent condensation.

Hydraulic reservoir

Fill the hydraulic reservoir to the uppermost level mark.

Steering cylinder, hinges, etc.

Lubricate the joint bearings with grease.

Lubricate the steering cylinder piston with preservative grease.

Also lubricate the hinges of the engine compartment and cab doors. Lubricate both ends of the forward-reverse lever (chrome parts).

Hoods, tarpaulin

Lower the instrument cover over the instrument panel.

Cover the entire roller with a tarpaulin. A gap must be left between the tarpaulin and the ground.

If possible, store the roller indoors and ideally in a building where the temperature is constant.

Tires (All-weather)

Check that tire pressure is 110 kPa (1.1 kp/cm^2), (16 psi).

Miscellaneous

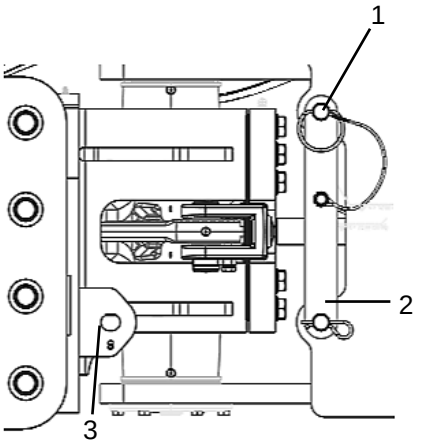

Fig. Steering joint lock.
1. *Safety pin*
2. *Lock arm*
3. *Articulation lock*

Lifting

Locking the articulation

Articulation must be locked to prevent inadvertent turning before lifting the roller.

Turn the steering wheel to the straight-ahead position. Activate the parking/emergency brake.

Pull out the safety pin (1) fitted with a wire.

Release the lock arm (2) and place it on the articulation lock (3) at the steering articulation.

Insert the safety pin (1) into the holes in the arm (2) and secure the lock pin with the safety pin (3).

Lifting the roller

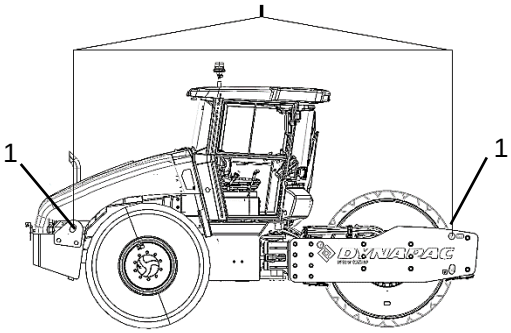

Fig. Roller prepared for lifting:
1. *Lifting plate.*

The machine's gross weight is specified on the hoisting plate (1). Refer also to the Technical specifications.

Lifting equipment such as chains, steel wires, straps and lifting hooks must be dimensioned in accordance with the relevant safety regulations for the lifting equipment.

Stand well clear of the hoisted machine! Make sure that the lifting hooks are properly secured.

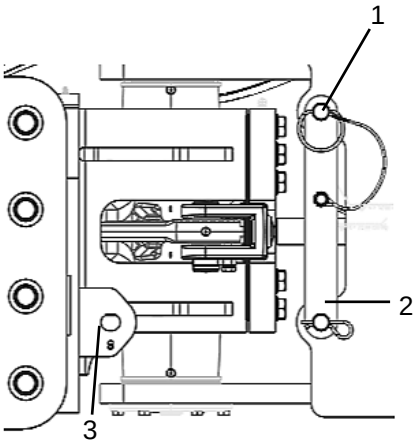

Fig. Steering joint lock
1. *Lock arm*
2. *Safety lock*
3. *Lock pin*
4. *Articulation lock*

Unlocking the articulation

Remember to restore the steering joint lock on the steering joint to open before operating.

Return the lock arm (2) to the starting position and secure it with the lock pin (1) to the articulation lock (4). Install the safety pin with cable (2) to secure the lock pin (3). The joint lock (4) is on the machine frame.

Towing

The roller can be moved up to 300 meters (330 yards) using the instructions below.

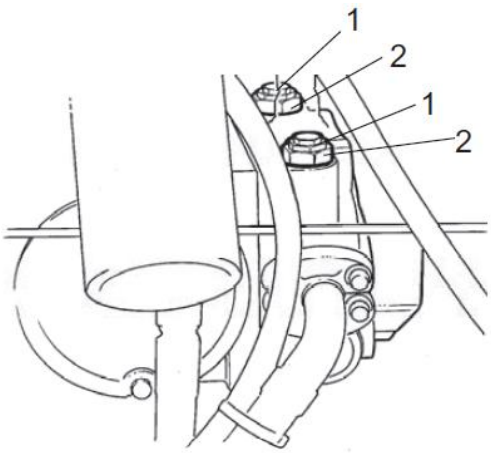

Fig. Propulsion pump
1. *Towing valve*
2. *Safety nut*

Alternative 1

Short distance towing with the engine running.

Activate the parking/emergency brake, and temporarily stop the engine. Chock the wheels to prevent the roller from moving.

Loosen both towing valves (1) (middle hex nut) three turns to the left, holding the multi-function valve (2) (lower hex nut) stationary. The valves are on the forward drive pump.

Start the engine and allow it to idle.

The roller can now be towed and can also be steered if the steering system is otherwise functioning.

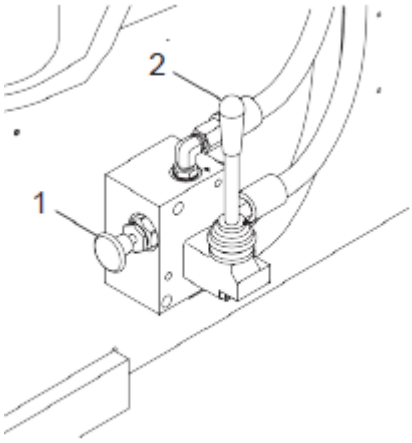

Fig. Roller prepared for lifting
1. Button
2. Manual pump

Alternative 2

Short distance towing when the engine is inoperative

Chock the wheels to prevent the roller from moving when the brakes are hydraulically disengaged.

Press button (1) and move the hand pump (2) horizontally until you feel resistance to movement, keep moving several times until the brake is released.

Towing the roller

When towing/recovering, the roller must be braked by the towing vehicle. A towing bar must be used as the roller has no brakes.

The roller must be towed slowly, max. 3 km/h (2 mph) and only towed short distances, max. 300 m (330 yards).

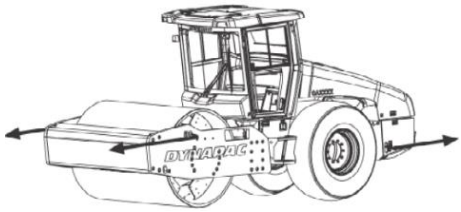

Fig. Towing

When towing/retrieving a machine, the towing device must be connected to both lifting holes. The pulling force must act longitudinally on the machine as shown in the figure. Maximum gross pulling force 185 kN (41.590 lbf).

Reverse the towing preparations according to alternative 1 or 2 in the preceding section.

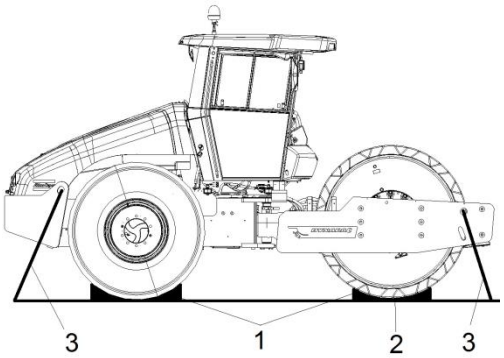

Fig. Transport
1. ***Chocks***
2. ***Support***
3. ***Stretch handle***

Transport

Before lifting or transport, lock the steering joint. Follow the instructions in the respective sections.

Apply the chocks to the cylinders (1) and then attach them to the transport vehicle.

Place supports under the cylinder frame (2) to avoid overloading the roller suspension when it is held by tensioning cables.

Secure the machine with stretch handle (3) on all four corners. The adhesives indicate the fixing points.

Remember to unlock the articulation before starting the roller.

Operating instructions - Summary

1. **Follow the SAFETY INSTRUCTIONS specified in the Safety Manual;**
2. Ensure that all instructions in the MAINTENANCE section;
3. Turn the master switch to the ON position;
4. Move the forward/reverse lever to the NEUTRAL position;
5. Set the manual / static vibration selector to position 0;
6. Set the engine speed switch to idle position (900 rpm);
7. Start the engine and allow it to warm up;
8. Set the engine speed switch to Work mode (2200 rpm);
9. Set the speed control lever to the maximum starting position;
10. **Drive the roller. Operate the F/R lever with care;**
11. **Test the brakes. Remember that the braking distance will be longer if the hydraulic fluid is cold;**
12. Use vibration only when the roller is in motion;
13. **In an emergency:**
    - **Press the parking/emergency brake button;**
    - **Hold the steering wheel firmly;**
    - **Brace yourself for a sudden stop**.
14. When parking:
    - Press the reserve/parking brake button;
    - Switch off the engine and block the drum and chock the wheels.
15. When lifting:
    - Refer to the relevant section in the Instruction Manual.
16. When towing:
    - Refer to the relevant section in the Instruction Manual.
17. When transporting:
    - Refer to the relevant section in the Instruction Manual.
18. 20. When recovering:
    - Refer to the relevant section in the Instruction Manual.

Preventive maintenance

Complete maintenance is necessary for the machine to function satisfactorily and at the lowest possible cost.

The Maintenance section includes the periodic maintenance that must be carried out on the machine.

The recommended maintenance intervals assume that the machine is used in a normal environment and working conditions.

Acceptance and delivery inspection

The machine is tested and adjusted before it leaves the factory.

On arrival, before delivery to the customer, delivery inspection must be conducted as per the check list in the warranty document.

Any transport damage must be reported immediately to the transport company, as this is not covered by the product warranty.

Warranty

The warranty is only valid if the stipulated delivery inspection and the separate service inspection have been completed as per the warranty document, and when the machine has been registered for starting under the warranty.

The warranty is not valid if damage has been caused by inadequate service, incorrect use of the machine, the use of lubricants and hydraulic fluids other than those specified in the manual, or if any other adjustments have been made without the requisite authorization.

Maintenance - Lubricants and symbols

Always use high-quality lubricants and the amounts recommended. Too much grease or oil can cause overheating, resulting in rapid wear.

ENGINE OIL	Air temperature -15°C - +50°C (5°F-122°F)	**Dynapac Engine oil 200**	P/N **4812161855** (5L) P/N **4812161856** (20L)
HYDRAULIC OIL	Air temperature -15°C - +50°C (5°F-122°F) Ambient air temperature above +40°C (104°F)	**Dynapac Hydraulic oil 300** **Shell Tellus T100 or equivalent.**	P/N **4812161867** (5L) P/N **4812161868** (20L)
TRANSMISSION OIL	Air temperature -15°C - +40°C (5°F-104°F) Air temperature 0°C (32°F) - above +40°C (104°F)	**Dynapac Gear oil 300** **Shell Spirax S2 ALS 85W-140**	P/N **4812161883** (5L) P/N **4812161884** (20L)
CARTRIDGE OIL	Air temperature -15°C - +40°C (5°F-104°F)	**Dynapac Drum Oil 1000**	P/N **4812161887** (5L) P/N **4812161888** (20L)
GREASE		**Dynagrease**	P/N **4812030096** (0.4 Kg)
FUEL	See engine manual.		
COOLANT	Anti-freeze protection down to about -37°C (-34.6°F). Mixed in equal parts with water (50/50)	**Dynapac coolant 100**	P/N **4812161854** (20L)

Other fuel and lubricants are required when operating in areas with extremely high or extremely low ambient temperatures. See the ‘Special instructions’ chapter, or consult Dynapac.

Maintenance symbols

	Engine, oil level		Tire pressure
	Engine, oil filter		Air filter
	Hydraulic reservoir, level		Battery
	Hydraulic fluid, filter		Recycling
	Transmission, oil level		Fuel filter
	Drum, oil level		Coolant, level
	Oil for lubrication		

Maintenance - Maintenance schedule

Service and maintenance points

Read this section of the manual carefully before performing any maintenance or lubrication work on the machine.

Get used to examining the areas around and below the equipment. It's a common and easy way to detect leaks in their early stage and likely anomalies.

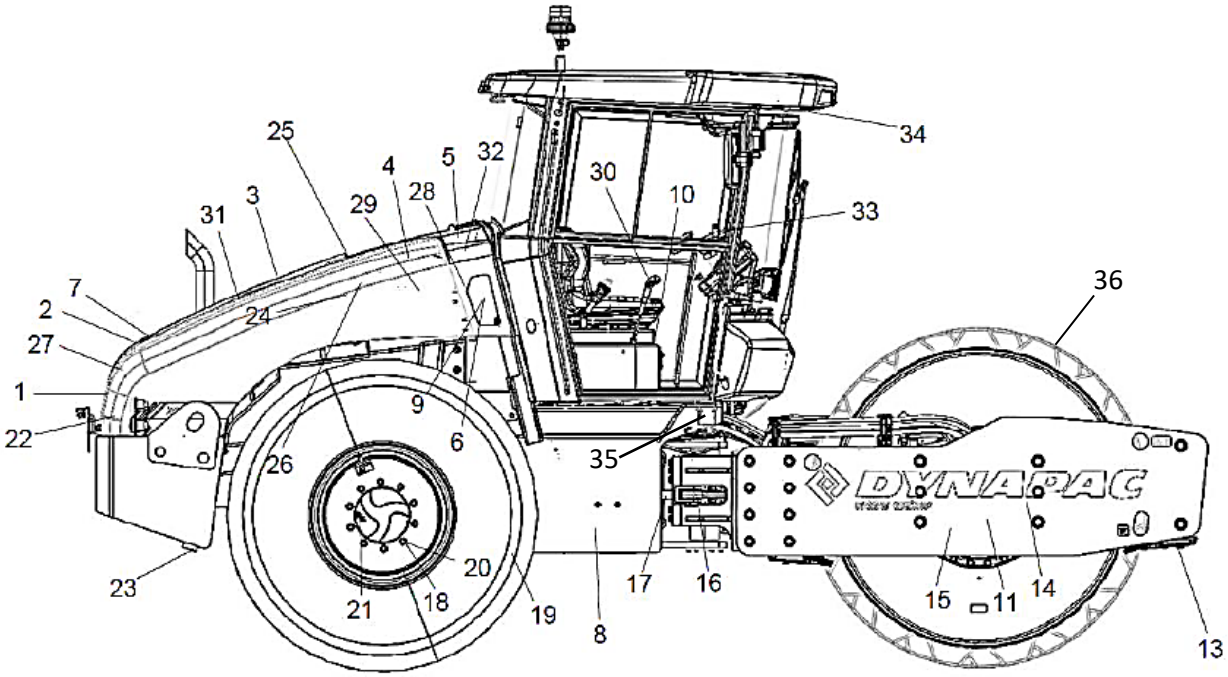

Fig. Service and maintenance points

1. Cooling grid	**13. Scrapers**	**25. Supply pump, fuel**
2. Fuel filter, fuel pre-filter	**14. Cartridge oil, level plug**	**26. Diesel fuel, filling**
3. Oil level, Diesel engine	**15. Rubber elements and fastening screws**	**27. Battery**
4. Air filter	**16. Steering hitch**	**28. Water radiator**
5. Hydraulic reservoir, sight glass	**17. Steering cylinders (x2)**	**29. Drive belts**
6. Bleeding filter	**18. Wheel nuts**	**30. Forward-Reverse lever**
7. Hydraulic oil filter	**19. Tires, pressure**	**31. Engine cover**
8. Drainage, hydraulic oil reservoir	**20. Rear axle, differential**	**32. Diesel engine cooling, level**
9. Hydraulic fluid, filling	**21. Rear axle, planetary gears (x2)**	**33. Commands panel**
10. Fuses box	**22. Oil filter, Diesel engine**	**34. Air conditioning filter**
11. Cartridge oil, filling,	**23. Draining, fuel tank**	**35. Air conditioning drain**
12. Drum gearbox	**24. Diesel engine standstill (x4)**	**36. Pad shell**

Scheduled maintenance and lubrication

Periodic maintenance should be carried out after the number of hours specified. Use the daily, weekly etc. periods where number of hours cannot be used.

Remove all dirt before filling, when checking oils and fuel and when lubricating using oil or grease.

The manufacturer's instructions found in the engine manual also apply. Specific maintenance and checks on diesel engines must be carried out by the engine supplier's certified personnel.

Park the compactor on a flat surface.

Always check and adjust the machine, shut off the engine and confirm that the Forward-Reverse lever is in the "Neutral" position.

When the engine is running indoors, make sure that there is sufficient air inlet to avoid carbon monoxide poisoning.

Maintenance, 10 hours

Every 10 hours of operation (Daily)

Refer the figure "Revision and Inspection Points" to find the page number of the sections referred to!

Pos. in figure	Action	Comment
	Before starting up for the first time on that day	
13	Check the scraper setting	
1	Check for free circulation of cooling air	
3,5,9,11, 12,20,32	Check fluids levels (coolant, oils, and Diesel)	Refer to the engine manual
26	Refuel	
33	Test the brakes	
35	Check the air conditioning drain	
36	Pad shell – Tightening	Only Drum with pad shell

Maintenance, after the FIRST 50 hours of operation

Refer the figure "Revision and Inspection Points" to find the page number of the sections referred to!

Pos. in figure	Action	Comment
7	Replace the hydraulic oil filter	
20	Replace oil in rear axle differential	
21	Replace oil in the rear axle planetary gears	
11	Replace the drum cartridge oil	
30	Replace the oil in the drum gearbox	
16	Steering hitch - Tightening	

Every 50 hours of operation (Weekly)

Refer the figure "Revision and Inspection Points" to find the page number of the sections referred to!

2	Drain the filter liquid	
4	Check/clean the air filter elements	Replace as required
16	Lubricate the central joint	
17	Lubricate the steering cylinders	
30	Check the forward/reverse lever adjust	
18	Check the tires pressure	
19	Check the tightness of the wheel nuts	
36	Pad shell – Tightening	Only Drum with pad shell

Maintenance, every 250/750 hours of operation

Refer the figure "Revision and Inspection Points" to find the page number of the sections referred to!

2	Replace the fuel filter and fuel pre-filter	Refer to the engine manual
34	Check the AC filter	
20,11,14	Check the oil level in rear axle and drum	
27	Check the battery	
-	Check the bolted joints	
-	Check the rubber elements	

-	Cleaning the cartridge ventilation	
28	Check and clean the radiator	

Maintenance, every 500 hours of operation

Refer the figure "Revision and Inspection Points" to find the page number of the sections referred to!

22	Replace the Diesel engine oil and oil filter	Refer to the engine manual
2	Replace the fuel filter and fuel pre-filter	Refer to the engine manual
4	Replace the primary air filter	
34	Check the air conditioning filter	
20,11,14	Check the oil level in rear axle and drum	
27	Check the battery	
-	Check the bolted joints	
-	Check the rubber elements	
-	Cleaning the cartridge ventilation	
28	Check and clean the radiator	

Maintenance, every 1.000 hours of operation

Refer the figure "Revision and Inspection Points" to find the page number of the sections referred to!

7	Replace the hydraulic fluid filter	
34	Check the air conditioning filter	
22	Replace the Diesel engine oil and oil filter	Refer to the engine manual
2	Replace the fuel filter and fuel pre-filter	Refer to the engine manual
4	Replace the primary and secondary air filter	
20	Replace oil in rear axle differential	
21	Replace oil in the rear axle planetary gears	
11	Check the drum cartridge oil	
27	Check the battery	
-	Check the bolted joints	
-	Check the rubber elements	
-	Cleaning the cartridge ventilation	
8,23	Drain the condensate from hydraulic oil reservoir and fuel tank	
-	Check the engine belt tension	Refer to the engine manual
30	Lubricate the forward/reverse lever setting	

28	Check and clean the radiator	
16	Steering hitch - Tightening	
16	Drum frame shim (Steering hitch) – Check/adjust	Contact machine dealer

Maintenance, every 2.000 hours of operation

Refer the figure "Revision and Inspection Points" to find the page number of the sections referred to!

7	Replace the hydraulic fluid filter	
34	Check the air conditioning filter	
22	Replace the Diesel engine oil and oil filter	Refer to the engine manual
2	Replace the fuel filter and fuel pre-filter	Refer to the engine manual
4	Replace the primary and secondary air filter	
20	Replace oil in rear axle differential	
21	Replace oil in the rear axle planetary gears	
9	Replace the hydraulic oil	
11	Replace the drum cartridge oil	
12	Replace the oil in the drum gearbox	
28	Replace engine coolant	
27	Check the battery	
-	Check the bolted joints	
-	Check the rubber elements	
-	Cleaning the cartridge ventilation	
8,23	Drain the condensate from hydraulic oil reservoir and fuel tank	
-	Check the engine belt tension	Refer to the engine manual
30	Lubricate the forward/reverse lever	
28	Check and clean the radiator	
16	Steering hitch - Tightening	

Maintenance Schedule

DYNAPAC FAYAT GROUP

Maintenance Schedule

O Check ● Replace

Pos.	Action	Pág.	10 hours (daily)	First 50 hours	50 hours (weekly)	250 hours (montly)	500 hours (quarterly)	750 hours	1000 hours (semiannually)	1250 hours	1500 hours	1750 hours	2000 hours (annually)	Notes
13	Scrapers check ajustment	67	O											
36	Pad shell – Tightening	68	O		O									
1	Check engine air circulation	68	O											
3,5,9,11,12,20	Check fluid levels (water/oil/diesel)	69	O											See engine manual
26	Fuel tank filling	70	O											
33	Check functioning of the brakes	70	O											
35	Check the air conditioning drain	71	O											
7	Replace the hydraulic oil filter	72		●					●				●	
20	Rear axle differential oil change	73		●					●				●	
21	Planet gear oil change	74		●					●				●	
11	Replace cartridge oil	75		●									●	
12	Replace gearbox oil	76		●									●	
16	Steering hitch tightening	76		O					O				O	
4	Air cleaner cleaning	78			O									
16,17	Articulation/steering joint lubrification	79			O									
30	Forward and reverse level adjust	79			O									
18,19	Check air pressure and tightening of wheel nuts	80			O									
2	Fuel filter and fuel prefilter replacement	81				●	●	●	●	●	●	●	●	See engine manual
34	Check air conditioning filter	82				O	O	O	●	O	O	O	●	
20,11,14	Check oil level	83				O	O	O	O	O	O	O	O	
27	Check battery	84				O	O	O	O	O	O	O	O	
-	Check tightening of bolted joints	84				O	O	O	O	O	O	O	O	
-	Check the rubber elements	85				O	O	O	O	O	O	O	O	
11	Clean of cartridge breather	85				O	O	O	O	O	O	O	O	
28	Check/cleaning radiator	85				O	O	O	O	O	O	O	O	
22	Engine oil and filter replacement	86					●		●		●		●	See engine manual
4	Replace air filter	91					●		●		●		●	
8,23	Draining fuel and hydraulic tank	97							O				O	
29	Check the engine belt tension	98							O				O	See engine manual
30	Controls – Lubrication forward-reverse control	98							O				O	
16	Drum frame shim (Steering hitch) – Check/adjust	100							O					Contact machine dealer
9	Hydraulic reservoir oil change	105											●	

! Check the machine's hour meter for the type of maintenance required.

Maintenance, 10 hours

Every 10 hours of operation (Daily)

Scrapers - Check, adjustment

It is important to consider movement of the drum when the machine turns, i.e., the scrapers can be damaged or wear of the drum may increase if adjustment is made closer than the values stated.

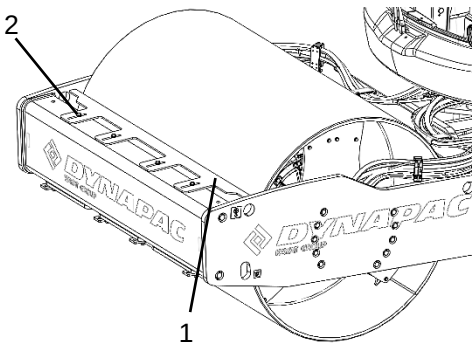

Fig. Flat drum scrapers
1. ***Scraper blade***
2. ***Screws***

Scrapers, Flat drum

If necessary, adjust distance to the drum as follows:

Loosen the screws (2) on the scraper attachment.

Then adjust the scraper blade (1) to 20 mm from the drum.

Tighten the screws (2).

2	**M16**	169 Nm	4 units

Scrapers, Pad-drum

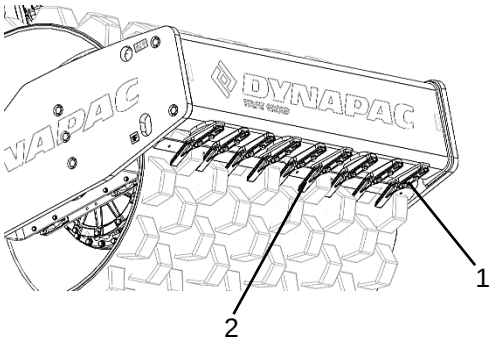

Fig. Pad-drum scrapers
1. ***Screws***
2. ***Scraper teeth (x18)***

Loose the screws (1), then adjust each scraper tooth (2) to 25 mm (1 in) between scraper tooth and drum.

Center each scraper tooth (2) between the pads.

Tighten the screws (1).

1	**M16**	169 Nm	18 units

Pad shell – Tightening

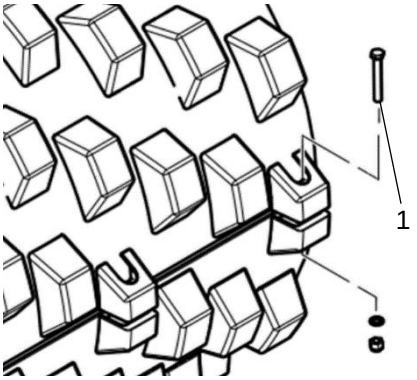

Fig. Pad shell
1. Bolts

If the pad shell kit is assembled in the field, perform a quick test of about an hour and a half and retighten all the bolts (if the machine is delivered with the pad shell kit installed, do not repeat as the test is done at the factory). Repeat the tightening again after another 4 hours of operation. This is necessary to ensure settling of the drum shell.

Tighten the bolts (1).

1	**M20**	330 Nm	8 units

Bolt tightening sequences are used on safety critical and crucial joints of systems that use multiple bolts.

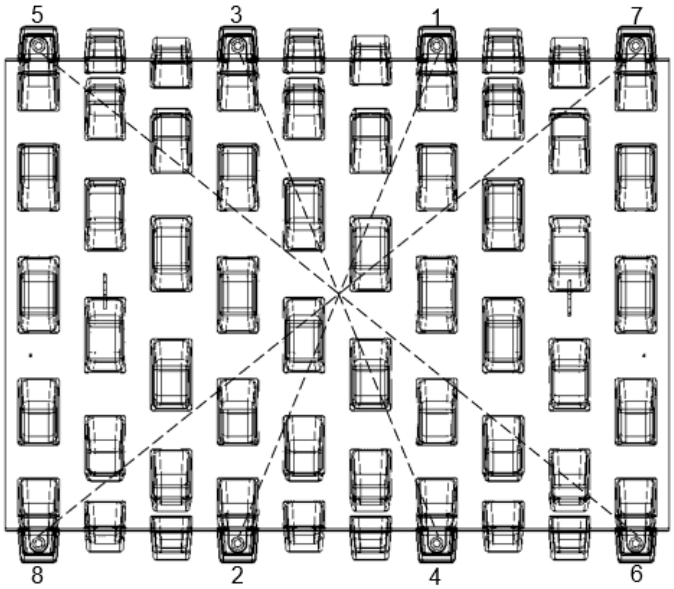

Fig. Pad shell bolts tightening sequence

Air circulation - Check

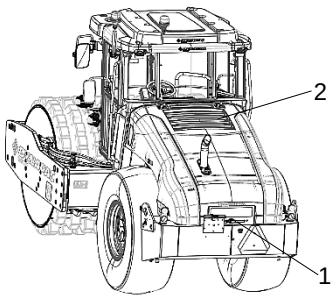

Fig. Engine hood
1. Hood lock
2. Protective grille

Ensure that the engine has free circulation of cooling air through the protective grille in the hood.
To open the engine hood, turn the lock handle (1) upward. Raise the hood to its fully open position, checking that the red safety catch on the left gas spring is latched.

If the gas-springs for the hood are loosened and the hood is raised to its upper position - block the hood so that it cannot fall.

Check fluids levels

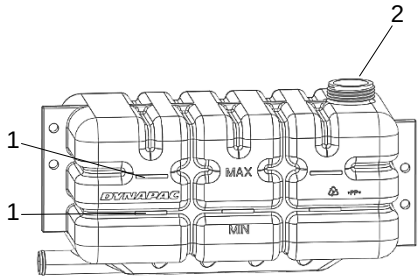

Fig. Coolant reservoir
1. *Marks min. and max.*
2. *Filler cap*

Coolant level - Check

The coolant reservoir is located beside the hydraulic oil reservoir and is easier to observe from the right side of the machine
The filler cap (2) is accessible from above the engine hood.
Check the coolant level with the engine shut off and cold. Check that the coolant level is between the max. and min. marks. (1).

Take great caution if the radiator cap must be opened while the engine is hot. Wear protective gloves and goggles.

Fill with a mixture of 50% water and 50% anti-freeze. See the lubrication specifications in these instructions and in the engine manual.

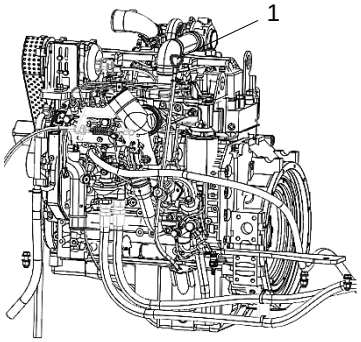

Fig.1 – Diesel engine oil level

Diesel engine - Check oil level

Take care not to touch any hot parts of the engine or the radiator when removing the dipstick. Risk for burns.

Pull up the dipstick (1) and check that the oil level is between the upper and lower marks. For further details, refer to the engine's instruction manual

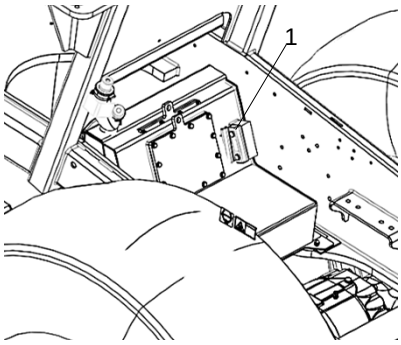

Fig. Hydraulic reservoir oil level
1. *Sight glass*

Hydraulic reservoir - Check oil level

The sight glass is located on the right side of the hood behind the operator's seat.

Place the roller on a level surface and check that the oil level in the sight glass (1) is between the max and min markings. Top up with the type of hydraulic fluid specified in the lubricant specification, if the level is too low.

Fuel tank - Filling

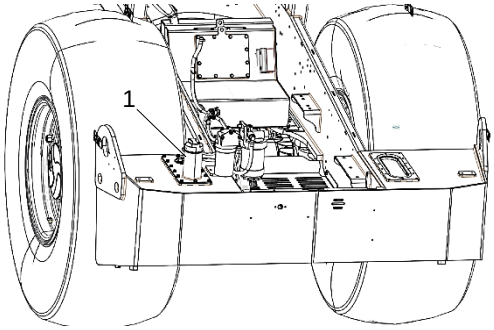

Fig. Right rear
1. Filler pipe

Top up the fuel tank every day to the lower edge of the pipe (1). Follow the engine manufacturer's specifications for Diesel fuel.

Stop the engine. Short-circuit (press) the filler gun against a non-insulated part of the roller before refueling, and against the filler pipe (1) while refueling.

Never refuel while the engine is running. Do not smoke and avoid spilling fuel.

Check the tank capacity in the section "Technical Specifications - Weights and Volumes".

Check the function of the brakes

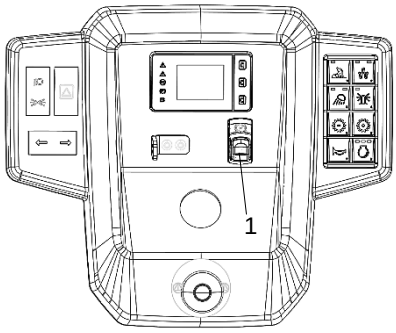

Fig. Control Panel
1. Parking brake switch

Parking brake

Move the machine forward slowly. Hold in the steering wheel and prepare for a sudden stop.
Press the parking brake button (1). The machine should stop abruptly while the engine is running.
After checking the brakes, place the forward/reverse lever in neutral.
Reactivate the parking brake switch (1).
The machine is ready to operate.

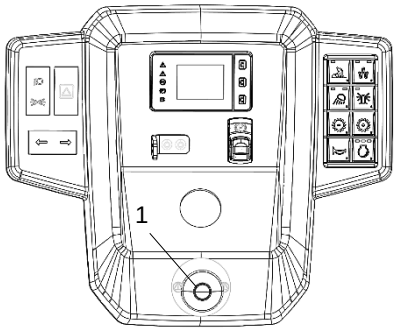

Fig. Control panel
1. Emergency stop button

Emergency stop

Move the machine forward slowly. Hold in the steering wheel and prepare for a sudden stop.
Press the emergency brake button (1). The machine should stop abruptly and the engine will be shut off.
After checking the brakes, place the forward/reverse lever in neutral.
Pull out the emergency stop button (1).
start the engine.
The machine is ready to operate.

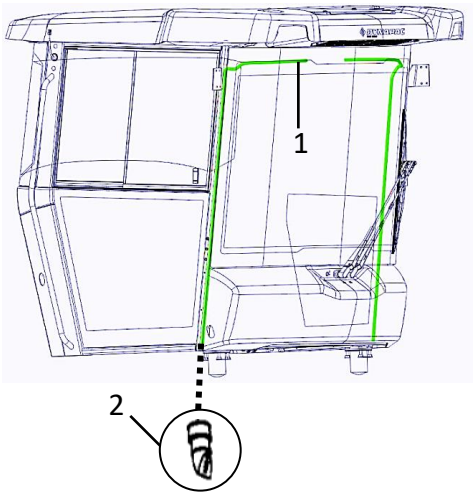

Fig. Cab
1. ***Air conditioning drain hose.***
2. ***Drain valve***

Check the air conditioning drain

Check for obstruction in the air conditioning drain hoses.

Open the topo cover of the cab to access the hoses (1)
Use compressed air to eliminate possible particles that can prevent water from flowing properly.

Check if the drain is not pressed into the frame of the machine, thus interrupting the flow of water discharge.

With a small amount of water, check if water flows through the drain valve (2)

Maintenance, first 50 hours

Park the roller on a level surface. The engine must be switched off and the parking brake activated when checking or adjusting the roller, unless otherwise specified.

Ensure that there is good ventilation (air extraction) if the engine is run indoors. Risk of carbon monoxide poisoning.

Hydraulic filter - Replacement

Wear protective goggles when working with compressed air.

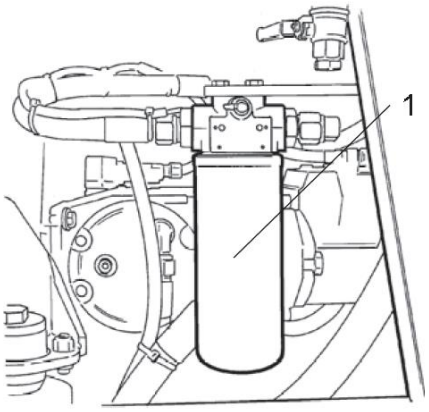

Fig. Engine compartment.
1. Hydraulic oil filter.

Clean carefully around the hydraulic oil filter.

Remove the oil filter (1) and hand in to an environment-friendly waste disposal station. This is a single-use filter and cannot be cleaned.

Make sure that the old sealing ring is not left on the filter holder, otherwise, this could cause leakage between the new seal and the old one.

Clean carefully around the filter holder's sealing surfaces.

Apply a thin coat of fresh hydraulic fluid on the new filter seal.

First tighten the filter until its seal is in contact with the filter attachment. Then turn an additional half revolution. Do not tighten the filter too hard as this could damage the gasket.

Start the engine and check that there is no leakage of hydraulic fluid from the filter. Check level of fluid in the sight glass (3) and top up as required.

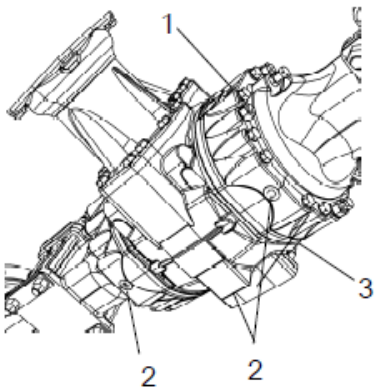

Fig. Rear axle.
1. ***Filler/level plug;***
2. ***Drain plug;***
3. ***Filler plug.***

Rear axle differential - Oil change

Never work under the roller when the engine is running. Park on a level surface. Block the wheels securely.

Clean and remove the three level/filler plugs (1) and (3) and all three drain plugs (2).

The level/filler plugs are located on the front and rear of the axle, and the drain plugs are located on the underside and rear. Drain the oil into a container. The volume is approx. 12,5 liters (13,2 qts).

Deliver the drain oil to environmentally correct handling.

Refit the drainage plugs and top up with fresh oil until the correct level is reached. Refit the level/filler plugs. Use transmission oil, see Lubricant Specification.

See lubricant specification.

Rear axle planetary gear - Oil drain

Position the roller with the plug (1) at its lowest position.

Clean, unscrew the plug (1) and drain the oil into a suitable receptacle. The volume is approximately 2 liters (2,1 qts).

Deliver the drain oil to environmentally correct handling.

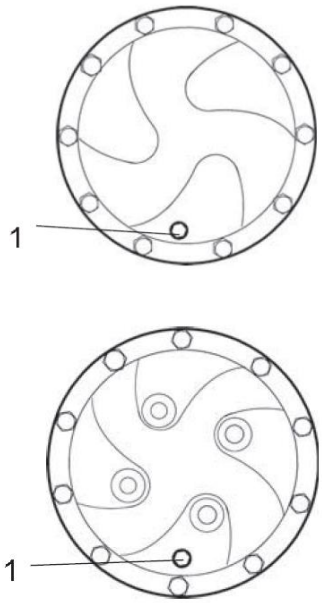

Fig. Oil drain - Planetary gear:
1. Filler /level plug.

Rear axle planetary gear - Oil change / Oil filler

Position the roller so that the plug (1) in the planetary gear is at "9 o'clock".

Clean and remove the plug.

Fill with oil to lower edge of level hole. Use transmission oil. See the lubrication specification.

Clean and refit the plug (1).

Check the fluid level in the same way on the rear axle's other planetary gear.

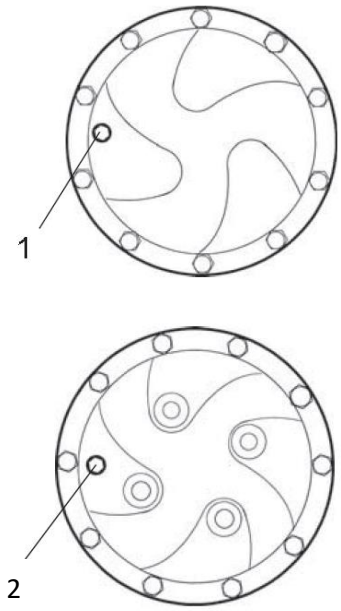

Fig. Oil filler – Planetary gear:
2. Filler /level plug.

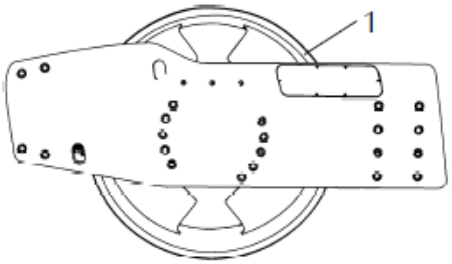

Fig. Drum, left side

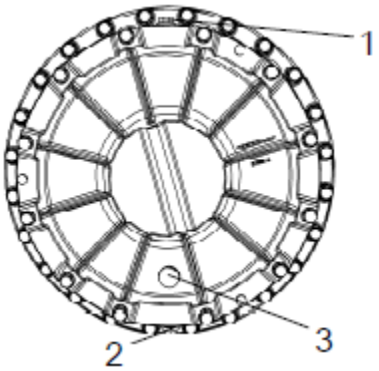

Fig. Cartridge, left side
1. *Filler plug*
2. *Drain plug*
3. *Sight glass*

Cartridge – Oil change

Park the machine on a flat surface so that the filler plug (1) is perpendicular.

Place a container of approximately 5 liters capacity under the drain plug (2).

Observe care when draining drum oil/hot drum oil. Wear protective gloves and goggles

Save the oil and hand in to an environment-friendly waste disposal station.

Clean and unscrew the filler plug (1) and the drain plug (2).

Allow all the oil to run out. Fit the drain plug and fill with new lubricant oil.

See lubricant specifications for more information about quality.

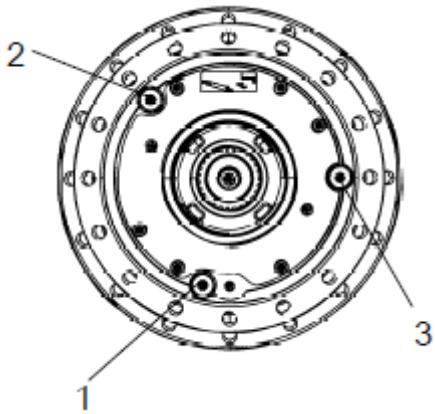

Fig. Drum gearbox
1. *Drain plug*
2. *Filler plug*
3. *Level plug*

Drum gearbox - Oil change

Place the machine on a flat surface so that the plugs (1) and (2) are in the position shown in the figure.

Clean and remove the plugs (1) (2) (3) and drain the oil into a container with a capacity of approximately 3,0 liters.

Replace the plug (1) and fill up with oil up to the level plug (3) in accordance with the instructions under "Drum gearbox - Oil level check".

Use transmission oil (see lubricant specifications).

Clean and refill the level plug (3) and filler plug (2).

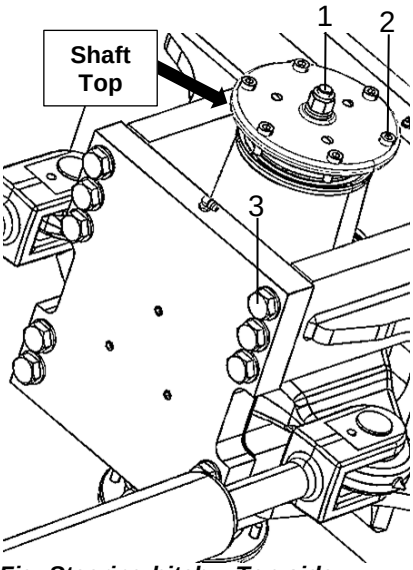

Fig. Steering hitch – Top side
1. *Nut (M16)*
2. *Shaft bolts (M10)*
3. *Cover bolts (M20)*

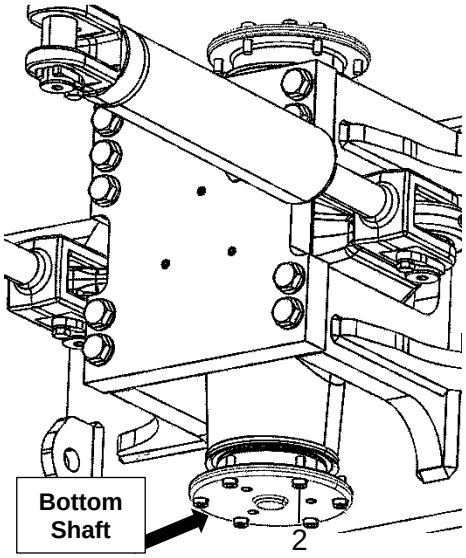

Fig. Steering hitch – Bottom side
2. *Shaft bolts (M10)*

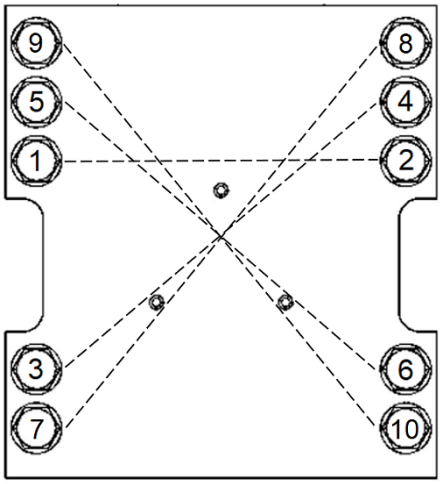

Fig. Cover bolts tightening sequence

Steering hitch – Tightening

Nobody must be allowed near the steering joint when the engine is running. Risk of being crushed when the steering is operated. Switch off the engine and activate the parking brake before lubrificating.

The easiest way to identify if you have this type of steering hitch is that has a new type of nut (1) at the top as shown. Turn all the steering hitch to one side to have easy access to the bolts.

Actual torque (Nm) should be when the machine's position is straight ahead.

Check and tighten according to the torque table below:

1	**M16**	270 Nm	1 unit
2	**M10**	40 Nm	12 units
3	**M20**	470 Nm	10 units

Bolt tightening sequences are used on safety critical and crucial joints of systems that use multiple bolts.

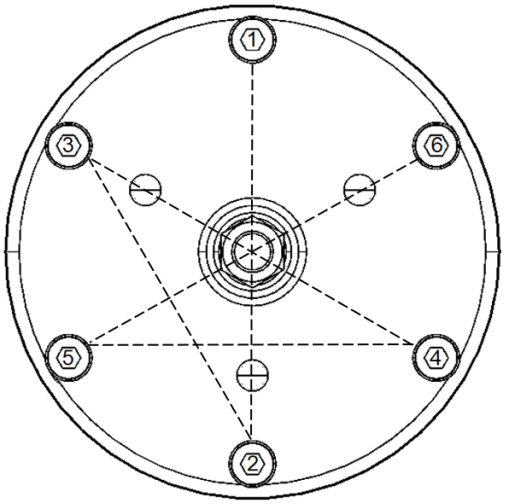

Fig. Shaft bolts tightening sequence

Pad shell – Tightening

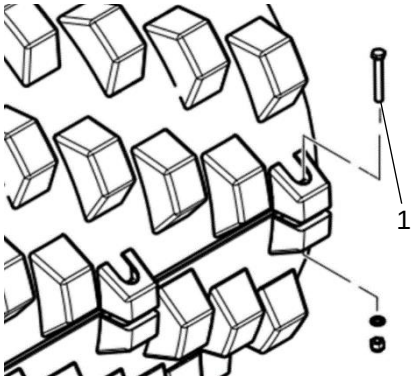

Fig. Pad shell
1. Bolts

This is necessary to ensure settling of the drum shell.

Tighten the bolts (1).

1	**M20**	330 Nm	8 units

Bolt tightening sequences are used on safety critical and crucial joints of systems that use multiple bolts.

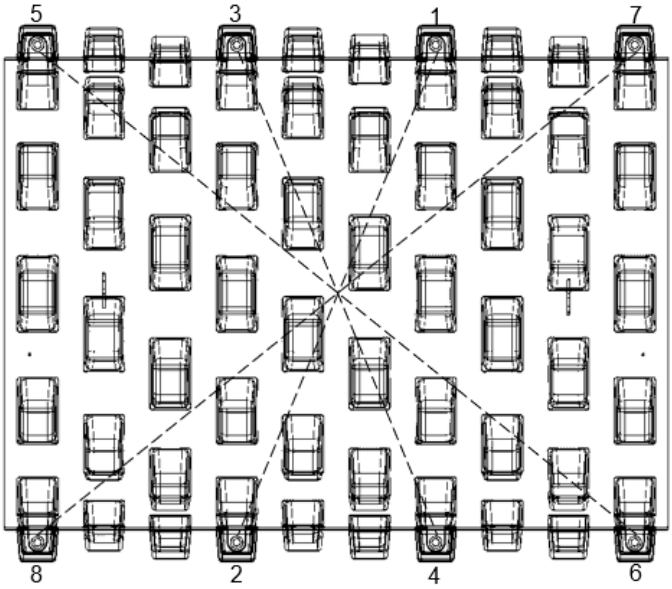

Fig. Pad shell bolts tightening sequence

Maintenance, 50 hours

Every 50 hours of operation (Weekly)

Park the roller on a level surface. The engine must be switched off and the parking brake activated when checking or adjusting the roller, unless otherwise specified.

Ensure that there is good ventilation (air extraction) if the engine is run indoors. Risk of carbon monoxide poisoning.

Air filter – Check the primary air filter

Change the air cleaner's main filter when the warning lamp on the display lights when the diesel engine is operating at full speed

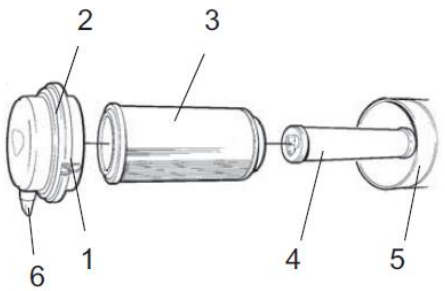

Fig. Air filter
1. ***Clips***
2. ***Cover***
3. ***Main (primary) filter***
4. ***Backup (secondary) filter***
5. ***Filter housing***
6. ***Dust valve***

Release the clips (1), pull off the cover (2), and pull out the main filter (3).

Do not remove the backup filter (4).

Clean the air filter if necessary, see section Air Filter - Clean.

When replacing the main filter (3), insert a new filter and refit the air cleaner in the reverse order.

Check the condition of the dust valve (6); replace if necessary.

When refitting the cover, make sure that the dust valve is positioned downwards.

Air filter – Clean

Clean the inside of the cover (2) and the filter housing (5).

Wipe also both surfaces for the outlet pipe.

Check that the hose clamps between the filter housing and the suction hose are tight and that the hoses are intact. Inspect the entire hose system, all the way to the engine.

Wipe clean on both sides of the outlet pipe.

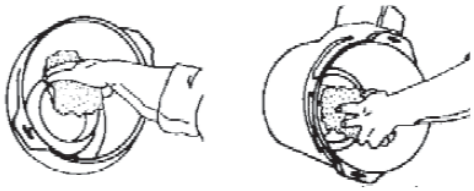

Inner edge of outlet pipe.

Outer edge of outlet pipe.

Fig. Air filter

Central Articulation / Steering - Lubrication

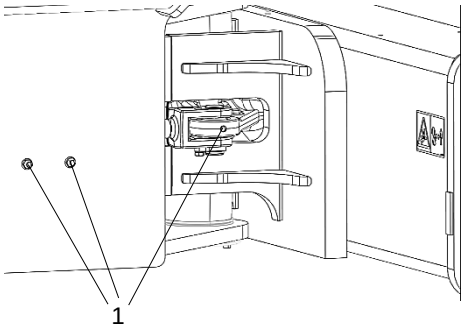

Fig. Lubrication of steering cylinders
1. Lubrication points cylinders (3 points)

Personnel are not allowed near the steering joint when the engine is running. Danger of crushing when maneuvering with the steering. Before lubricating, apply the emergency/parking brake.

Clean dirt and grease from lubrication points.

Use grease according to the lubricant specification.

Use specific grease on the central articulation.

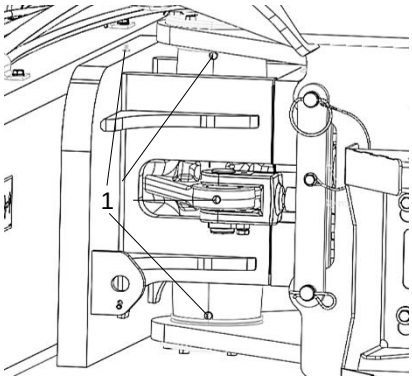

Fig. Lubrication of steering cylinders
1- Lubrication points cylinders (4 points)

Apply grease (5 pumps) to each lubrication point.
Check that the grease penetrates the bearings.

If the grease does not penetrate the bearings, it may be necessary to relieve the central articulation with a hydraulic jack and simultaneously repeat the operation.

Forward-Reverse lever - Adjusting

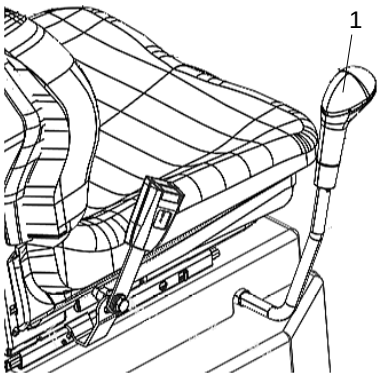

Fig. Forward-Reverse lever
1. Adjust access

Make sure the forward-reverse lever is firmly in your place.

If you want to adjust the firmness of the lever, make pressure adjustment (19mm or ¾" wrench) by the screw located to the right of the lever (1).

Tires - Air pressure check / Wheel nuts tightening

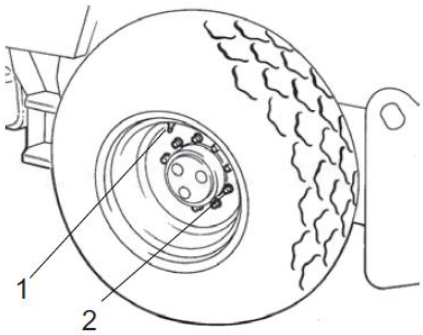

Fig. Wheels
1. Air valve
2. Wheel nuts

Check the tire pressures using a pressure gauge.
If the tires are filled with fluid, the air valve (1) must be in the "12 o'clock" position during pumping.
Recommended pressure: refer Technical Specifications.

When changing the tires, it is important that both of them have the same rolling radius. This is necessary to ensure proper functioning of the anti-slip in the rear axle

Check the tightening torque of the wheel nuts (2) at 630 Nm (465 lbf.ft).

Check both wheels and all nuts. (This only applies to a new machine or newly fitted wheels).

Check the safety manual that accompanies the roller before filling the tires with air.

Maintenance, 250 hours

Every 250/750/1250/1750 hours of operation (monthly)

Diesel engine - Fuel filter and pre-filter Replace

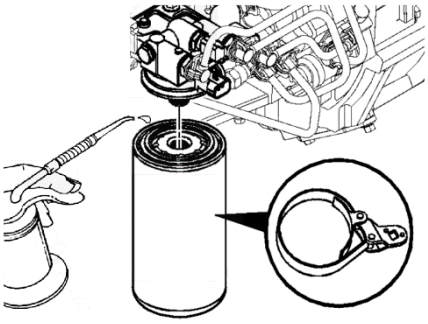

Fig. Fuel filter

Remove the threaded fuel filter using the filter wrench.

Lubricate the O-ring with clean engine oil.

Do not pre-fill the engine fuel filter.

Install the filter in the filter head. Tighten the filter until the gasket touches the surface of the filter head. Tighten the fuel filter plus ¾ turn after contact.

Bleed the fuel system after installing the fuel filter.

Refer to the bleed procedure in the engine manual.

Air conditioning (Optional) Fresh air filter – Change/Clean

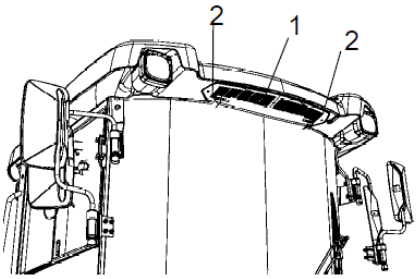

Fig. Cab
1. *Filters (2x)*
2. *Screws (3x)*

There is a fresh air filter (1), located at the front of the cab. Remove the three screws (2) and remove the protective cover.

Clean or replace them with new filters
It may be necessary to change the filters more often if the machine is working in a dusty environment.

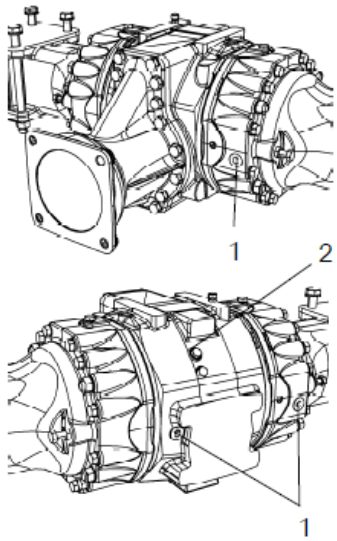

Fig. Level control - differential housing

1. ***Level plug (3x)***
2. ***Filler plug.***

Rear axle differential - Check oil level

Never work under the roller when the engine is running. Park on a level surface. Block the wheels securely.

Wipe clean and remove the level plugs (1) and check that the oil level reaches the lower edge of the plug holes. If the level is low, remove the filler plug (2) and top up with oil to the correct level. Use transmission oil, refer lubricant specifications.

Clean and refit the plug.

Rear axle planetary gears - Check oil level

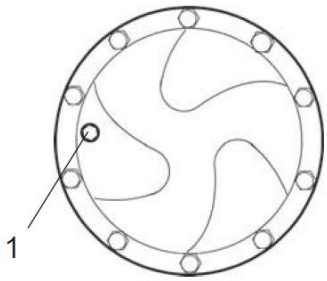

Fig. Level check - planetary gear
1. Level/Filler plug

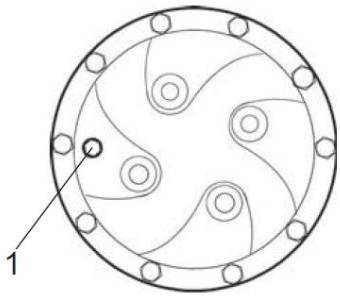

Fig. Level check - planetary gear (Anti-Slip differential)
1. Level/Filler plug

Position the roller so that the level plug (1) in the planetary gear is at "9 o'clock".

Wipe clean and remove the level plug (1) and check that the oil level reaches the lower edge of the plug hole. Top off with oil to the right level if the level is low. Use transmission oil. See lubrication specification.

Clean and refit the plug.

Check the oil level in the same way on the rear axle's other planetary gear.

Drum cartridge - Checking the oil level

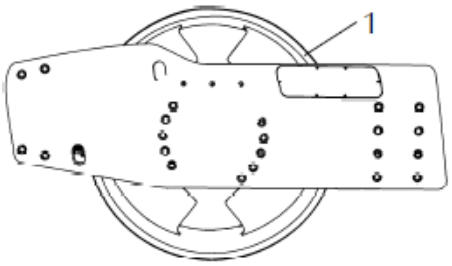

Fig. Drum, left side
1. Filler/drain plug

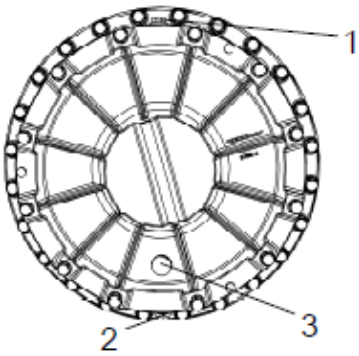

Fig. Cartridge, left side
1. Filler plug
2. Drain plug
3. Sight glass

Position the roller on a flat surface with the plug (1) and drum number plate (2) are visible on the right side.

The oil level should now reach the sight glass (3).

If necessary, remove the plug (1) and fill to the middle of the sight glass.

Clean the magnetic filler plug (1) of any metallic residue, before refitting the plug.

Refer to the correct oil grade in the lubricant specification.

Do not overfill with oil - risk for overheating.

Battery - Check condition

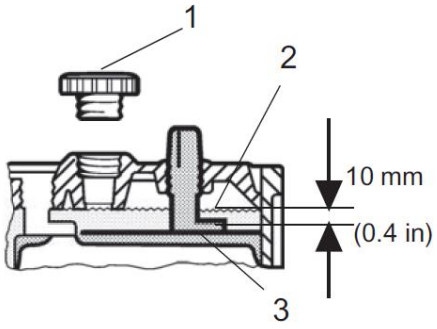

Fig. Electrolyte level in the battery:
1. *Cap;*
2. *Electrolyte level;*
3. *Plate.*

Remove the cap (1) and check that the electrolyte level (2) is about 10 mm above the plates. If the level is low, fill up with distilled water to the correct level.

If the ambient temperature is below freezing point, the engine should be running for some time after adding the distilled water. Otherwise there is a risk of the electrolyte freezing.

Check that the ventilation holes in the element caps are clogged and then place the cap.

The cable shoes should be clean and tightened. Corroded cable shoes should be cleaned and greased with acid-proof vaseline.

Be careful when washing with high pressure water and do not place the jet nozzle too close to the radiator.

When disconnecting the battery, always disconnect the negative cable first. When connecting the battery, always connect the positive cable first.

Dispose of batteries properly. The battery contains environmentally harmful lead.

When performing welding work on the machine, disconnect the battery cable and then all the cables connected to the alternator.

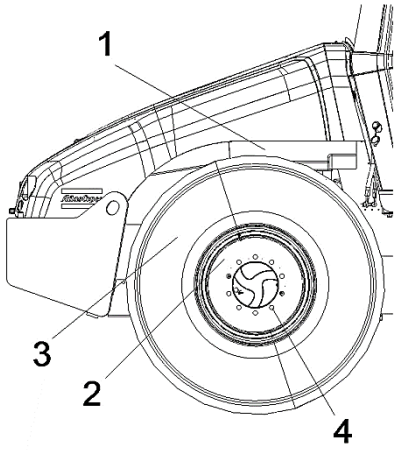

Fig. Right side of the machine
1. *Steering pump*
2. *Rear axle*
3. *Engine suspension*
4. *Wheel nuts*

Bolted joints – Check

Steering pump to Diesel engine (1), 55 N.m, lightly lubricated.

Rear axle suspension (2), 330 N.m (243 ft/lbf), oiled.

Engine suspension (3). Check if all M12 bolts (20 pieces) are tightened with 70 N.m and lightly greased.

Wheel nuts (4). Check if all nuts are tight, 630 N.mm, and oiled.

(The above information is valid only for new or replaced components).

Rubber elements and fastening screws - Check

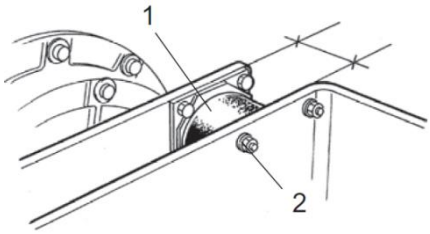

Fig. Drum, drive side
1. *Rubber element*
2. *Attachment screws*

Check all rubber elements (1), replace all of the elements if more than 25% of them on one side of the drum are cracked deeper than 10-15 mm (0.4-0.6 in).

Check using a knife blade or pointed object.

Check also that the screw fasteners (2) are tightened.

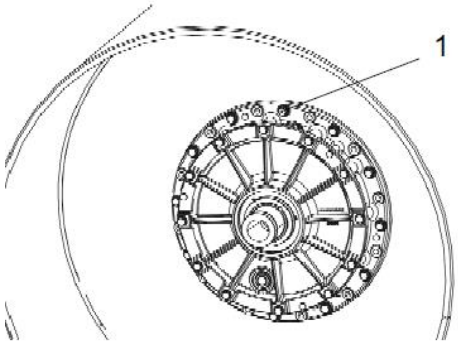

Fig. Drum
1. *Ventilation screw*

Drum cartridge - Cleaning the ventilation

Clean the drum's ventilation hole and ventilation screw (1). The hole is required to eliminate excess pressure inside the drum.

Radiator - Check/Cleaning

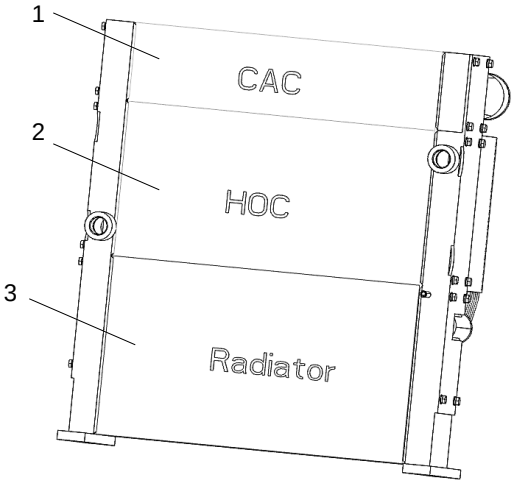

Fig. Engine compartment.
1. *Air radiator*
2. *Oil radiator*
3. *Cooling radiator*

Check that air can pass unobstructed through the radiators (1), (2) and (3).

Clean a dirty radiator using compressed air or a high-pressure water jet.

Blow air or direct water through the cooler in the opposite direction to that of the cooling air.

Be careful when using a high-pressure washer - do not place the nozzle too close to the radiator.

Wear protective goggles when working with compressed air or high-pressure water jets

Maintenance, 500 hours

Every 500 hours of operation (every three months)

Diesel engine - Oil and filter change

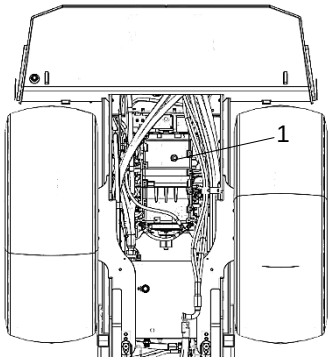

Fig. Engine left side:
1. Drain plug;

Take great care when draining warm fluid and oil. Wear protective gloves and goggles.

The oil drain plug (1) can be accessed most easily under the engine. Shut down the machine and drain the oil when the engine is warm. Place a container with a minimum capacity of 19 liters under the drain plug.

Replace the engine oil filter at the same time. Refer to the engine manual.

Value of plug tightening torque: 24 N.m

Hand in the drained oil and filter to an environment-friendly waste disposal station.

Diesel engine - Fuel filter and pre-filter Replace

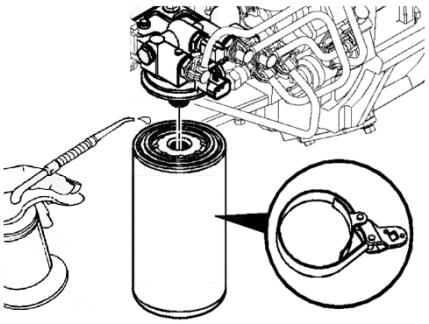

Fig. Fuel filter

Remove the threaded fuel filter using the filter wrench.

Lubricate the O-ring with clean engine oil.

Do not pre-fill the engine fuel filter.

Install the filter in the filter head. Tighten the filter until the gasket touches the surface of the filter head. Tighten the fuel filter plus ¾ turn after contact.

Bleed the fuel system after installing the fuel filter. Refer to the bleed procedure in the engine manual.

Air filter – Replace the primary air filter

Change the air cleaner's main filter when the warning lamp on the display lights when the diesel engine is operating at full speed

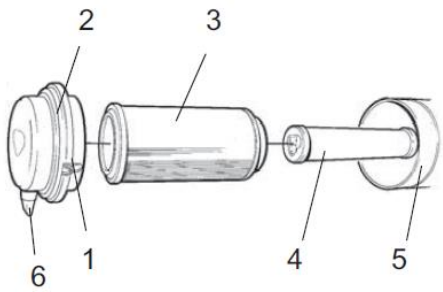

Fig. Air filter
1. ***Clips***
2. ***Cover***
3. ***Main (primary) filter***
4. ***Backup (secondary) filter***
5. ***Filter housing***
6. ***Dust valve***

Release the clips (1), pull off the cover (2), and pull out the main filter (3).

Do not remove the backup filter (4).
Clean the air filter if necessary, see section Air Filter - Clean.

When replacing the main filter (3), insert a new filter and refit the air cleaner in the reverse order.
Check the condition of the dust valve (6); replace if necessary.

When refitting the cover, make sure that the dust valve is positioned downwards.

Air conditioning (Optional) Fresh air filter – Change/Clean

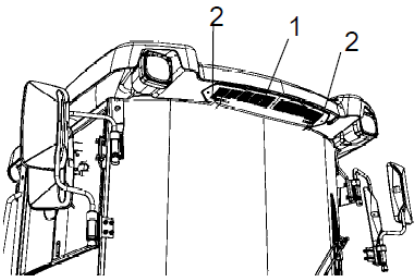

Fig. Cab
1. ***Filters (2x)***
2. ***Screws (3x)***

There is a fresh air filter (1), located at the front of the cab. Remove the three screws (2) and remove the protective cover.

Clean or replace them with new filters
It may be necessary to change the filters more often if the machine is working in a dusty environment.

Rear axle differential - Check oil level

Never work under the roller when the engine is running. Park on a level surface. Block the wheels securely.

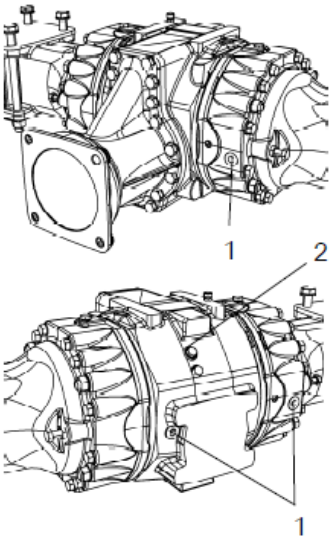

Fig. Level control - differential housing
1. ***Level plug (3x)***
2. ***Filler plug.***

Wipe clean and remove the level plugs (1) and check that the oil level reaches the lower edge of the plug holes. If the level is low, remove the filler plug (2) and top up with oil to the correct level. Use transmission oil, refer lubricant specifications.

Clean and refit the plug.

Rear axle planetary gears - Check oil level

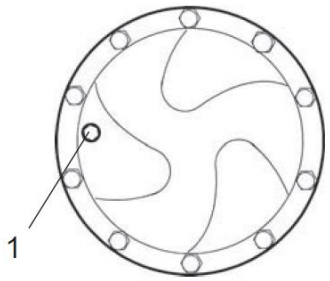

Fig. Level check - planetary gear
1. Level/Filler plug

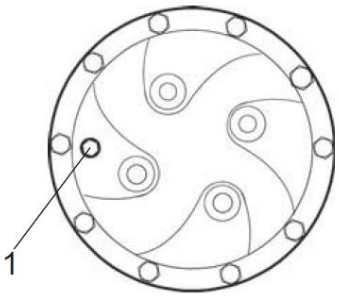

Fig. Level check - planetary gear (Anti-Slip differential)
1. Level/Filler plug

Position the roller so that the level plug (1) in the planetary gear is at "9 o'clock".

Wipe clean and remove the level plug (1) and check that the oil level reaches the lower edge of the plug hole. Top off with oil to the right level if the level is low. Use transmission oil. See lubrication specification.

Clean and refit the plug.

Check the oil level in the same way on the rear axle's other planetary gear.

Drum cartridge - Checking the oil level

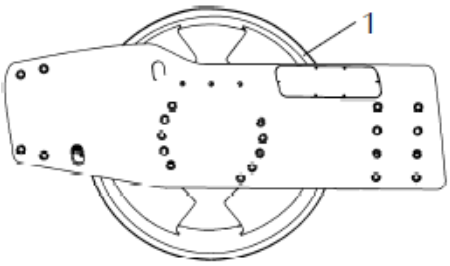

Fig. Drum, left side
1. Filler/drain plug

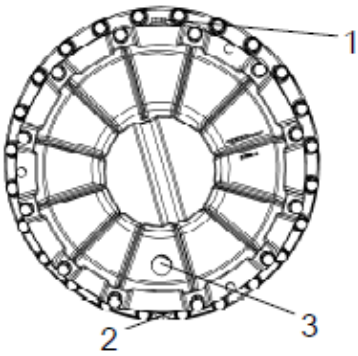

Fig. Cartridge, left side
1. Filler plug
2. Drain plug
3. Sight glass

Position the roller on a flat surface with the plug (1) and drum number plate (2) are visible on the right side.

The oil level should now reach the sight glass (3).

! If necessary, remove the plug (1) and fill to the middle of the sight glass.

Clean the magnetic filler plug (1) of any metallic residue, before refitting the plug.

Refer to the correct oil grade in the lubricant specification.

Do not overfill with oil - risk for overheating.

Battery - Check condition

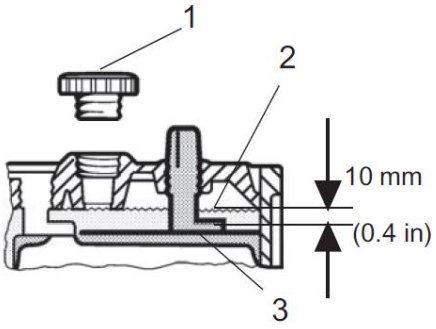

Fig. Electrolyte level in the battery:
1. ***Cap;***
2. ***Electrolyte level;***
3. ***Plate.***

Remove the cap (1) and check that the electrolyte level (2) is about 10 mm above the plates. If the level is low, fill up with distilled water to the correct level.

If the ambient temperature is below freezing point, the engine should be running for some time after adding the distilled water. Otherwise there is a risk of the electrolyte freezing.

Check that the ventilation holes in the element caps are clogged and then place the cap.

The cable shoes should be clean and tightened. Corroded cable shoes should be cleaned and greased with acid-proof vaseline.

Be careful when washing with high pressure water and do not place the jet nozzle too close to the radiator.

When disconnecting the battery, always disconnect the negative cable first. When connecting the battery, always connect the positive cable first.

Dispose of batteries properly. The battery contains environmentally harmful lead.

When performing welding work on the machine, disconnect the battery cable and then all the cables connected to the alternator.

Bolted joints – Check

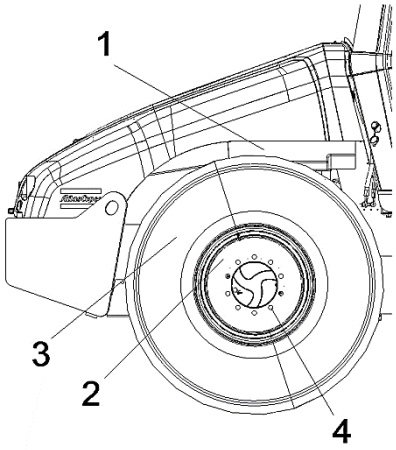

Fig. Right side of the machine
1. ***Steering pump***
2. ***Rear axle***
3. ***Engine suspension***
4. ***Wheel nuts***

Steering pump to Diesel engine (1), 55 N.m, lightly lubricated.

Rear axle suspension (2), 330 N.m (243 ft/lbf), oiled.

Engine suspension (3). Check if all M12 bolts (20 pieces) are tightened with 70 N.m and lightly greased.

Wheel nuts (4). Check if all nuts are tight, 630 N.mm, and oiled.

(The above information is valid only for new or replaced components).

Rubber elements and fastening screws - Check

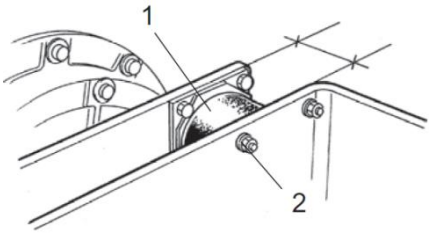

Fig. Drum, drive side
1. *Rubber element*
2. *Attachment screws*

Check all rubber elements (1), replace all of the elements if more than 25% of them on one side of the drum are cracked deeper than 10-15 mm (0.4-0.6 in).

Check using a knife blade or pointed object.

Check also that the screw fasteners (2) are tightened.

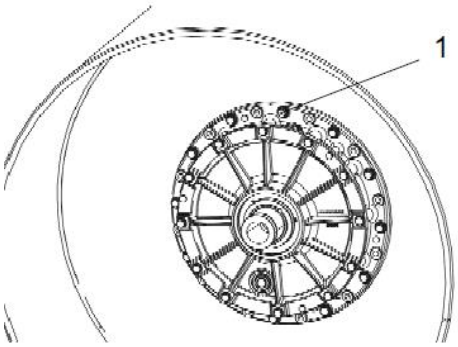

Fig. Drum
1. *Ventilation screw*

Drum cartridge - Cleaning the ventilation

Clean the drum's ventilation hole and ventilation screw (1). The hole is required to eliminate excess pressure inside the drum.

Radiator - Check/Cleaning

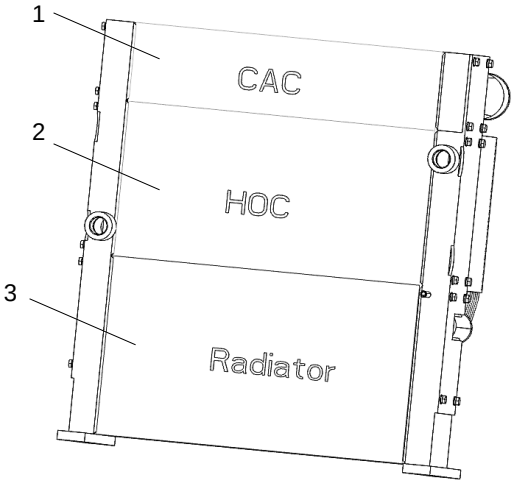

Fig. Engine compartment.
1. *Air radiator*
2. *Oil radiator*
3. *Cooling radiator*

Check that air can pass unobstructed through the radiators (1), (2) and (3).

Clean a dirty radiator using compressed air or a high-pressure water jet.

Blow air or direct water through the cooler in the opposite direction to that of the cooling air.

Be careful when using a high-pressure washer - do not place the nozzle too close to the radiator.

Wear protective goggles when working with compressed air or high-pressure water jets

Maintenance, 1.000 hours

Every 1.000 hours of operation (every six months)

Hydraulic filter - Replacement

Wear protective goggles when working with compressed air.

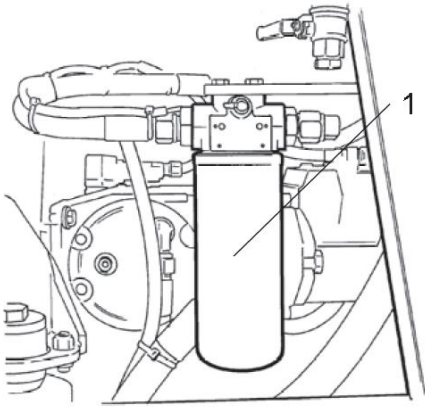

Fig. Engine compartment.
1. Hydraulic oil filter.

Clean carefully around the hydraulic oil filter.

Remove the oil filter (1) and hand in to an environment-friendly waste disposal station. This is a single-use filter and cannot be cleaned.

Make sure that the old sealing ring is not left on the filter holder, otherwise, this could cause leakage between the new seal and the old one.

Clean carefully around the filter holder's sealing surfaces.

Apply a thin coat of fresh hydraulic fluid on the new filter seal.

First tighten the filter until its seal is in contact with the filter attachment. Then turn an additional half revolution. Do not tighten the filter too hard as this could damage the gasket.

Start the engine and check that there is no leakage of hydraulic fluid from the filter. Check level of fluid in the sight glass (3) and top up as required.

Air conditioning (Optional) Fresh air filter – Change/Clean

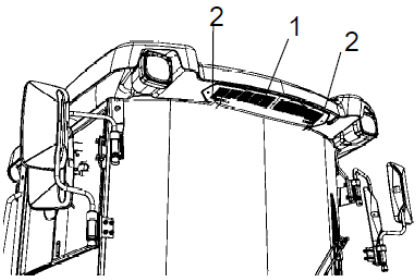

Fig. Cab
1. Filters (2x)
2. Screws (3x)

There is a fresh air filter (1), located at the front of the cab. Remove the three screws (2) and remove the protective cover.

Clean or replace them with new filters
It may be necessary to change the filters more often if the machine is working in a dusty environment.

Diesel engine - Oil and filter change

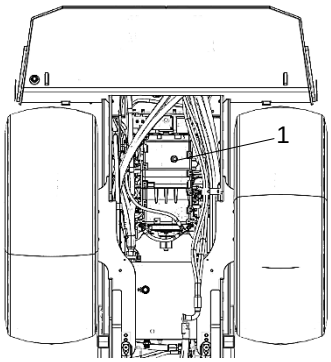

Fig. Engine left side:
1. Drain plug;

Take great care when draining warm fluid and oil. Wear protective gloves and goggles.

The oil drain plug (1) can be accessed most easily under the engine. Shut down the machine and drain the oil when the engine is warm. Place a container with a minimum capacity of 19 liters under the drain plug.

Replace the engine oil filter at the same time. Refer to the engine manual.

Value of plug tightening torque: 24 N.m

Hand in the drained oil and filter to an environment-friendly waste disposal station.

Diesel engine - Fuel filter and pre-filter Replace

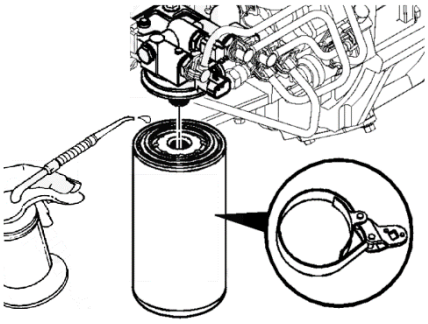

Fig. Fuel filter

Remove the threaded fuel filter using the filter wrench.

Lubricate the O-ring with clean engine oil.

Do not pre-fill the engine fuel filter.

Install the filter in the filter head. Tighten the filter until the gasket touches the surface of the filter head. Tighten the fuel filter plus ¾ turn after contact.

Bleed the fuel system after installing the fuel filter.

Refer to the bleed procedure in the engine manual.

Air filter – Replace the primary and secondary air filters

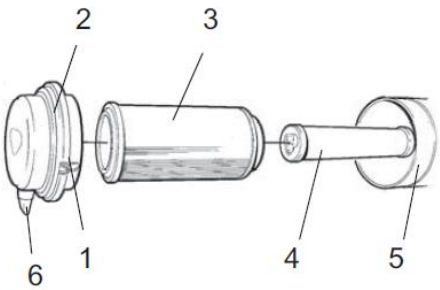

Fig. Air filter
1. *Clips*
2. *Cover*
3. *Main (primary) filter*
4. *Backup (secondary) filter*
5. *Filter housing*
6. *Dust valve*

Change the air cleaner's main filter when the warning lamp on the display lights when the diesel engine is operating at full speed

Release the clips (1), pull off the cover (2), and pull out the main filter (3).

Remove the backup filter and replace (4).
Clean the air filter if necessary, see section Air Filter - Clean.

When replacing the main filter (3), insert a new filter and refit the air cleaner in the reverse order.
Check the condition of the dust valve (6); replace if necessary.

When refitting the cover, make sure that the dust valve is positioned downwards.

Rear axle differential - Oil change

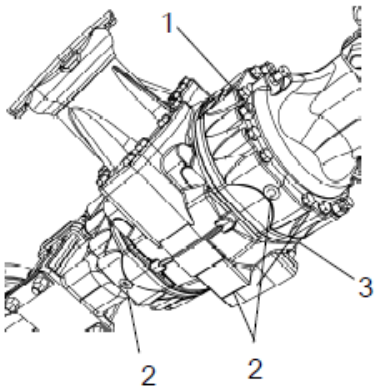

Fig. Rear axle.
1. *Filler/level plug;*
2. *Drain plug;*
3. *Filler plug.*

Never work under the roller when the engine is running. Park on a level surface. Block the wheels securely.

Clean and remove the three level/filler plugs (1) and (3) and all three drain plugs (2).

The level/filler plugs are located on the front and rear of the axle, and the drain plugs are located on the underside and rear. Drain the oil into a container. The volume is approx. 12,5 liters (13,2 qts).

Deliver the drain oil to environmentally correct handling.

Refit the drainage plugs and top up with fresh oil until the correct level is reached. Refit the level/filler plugs. Use transmission oil, see Lubricant Specification.

See lubricant specification.

Rear axle planetary gear - Oil drain

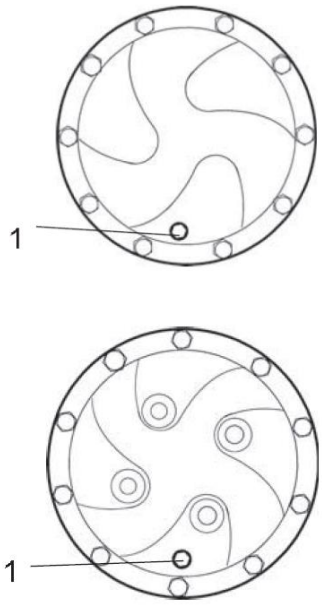

Fig. Oil drain - Planetary gear:
1. Filler /level plug.

Position the roller with the plug (1) at its lowest position.

Clean, unscrew the plug (1) and drain the oil into a suitable receptacle. The volume is approximately 2 liters (2,1 qts).

Deliver the drain oil to environmentally correct handling.

Rear axle planetary gear - Oil change / Oil filler

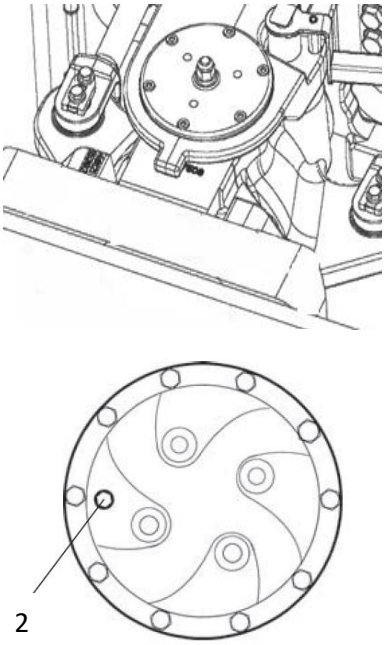

Fig. Oil filler – Planetary gear:
2. Filler /level plug.

Position the roller so that the plug (1) in the planetary gear is at "9 o'clock".

Clean and remove the plug.

Fill with oil to lower edge of level hole. Use transmission oil. See the lubrication specification.

Clean and refit the plug (1).

Check the fluid level in the same way on the rear axle's other planetary gear.

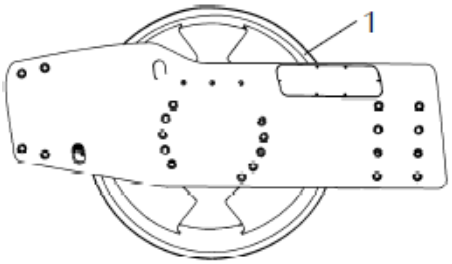

Fig. Drum, left side
1. *Filler/drain plug*

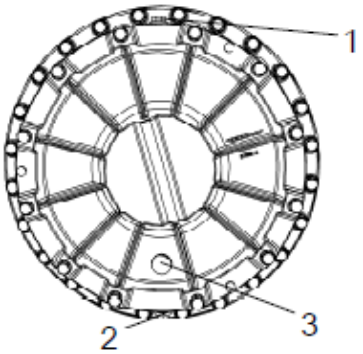

Fig. Cartridge, left side
1. *Filler plug*
2. *Drain plug*
3. *Sight glass*

Drum cartridge - Checking the oil level

Position the roller on a flat surface with the plug (1) and drum number plate (2) are visible on the right side.

The oil level should now reach the sight glass (3).

If necessary, remove the plug (1) and fill to the middle of the sight glass.

Clean the magnetic filler plug (1) of any metallic residue, before refitting the plug.

Refer to the correct oil grade in the lubricant specification.

Do not overfill with oil - risk for overheating.

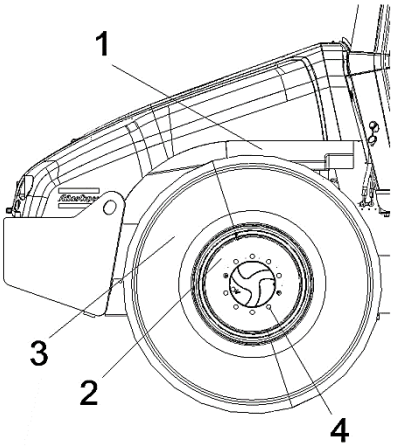

Fig. Right side of the machine
1. *Steering pump*
2. *Rear axle*
3. *Engine suspension*
4. *Wheel nuts*

Bolted joints – Check

Steering pump to Diesel engine (1), 55 N.m, lightly lubricated.

Rear axle suspension (2), 330 N.m (243 ft/lbf), oiled.

Engine suspension (3). Check if all M12 bolts (20 pieces) are tightened with 70 N.m and lightly greased.

Wheel nuts (4). Check if all nuts are tight, 630 N.mm, and oiled.

(The above information is valid only for new or replaced components).

Battery - Check condition

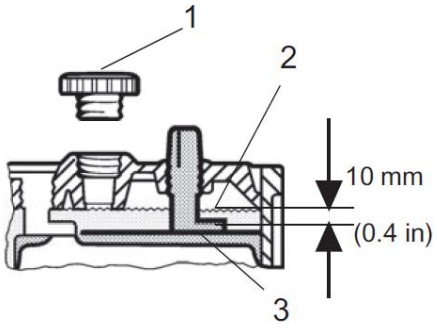

Fig. Electrolyte level in the battery:
1. ***Cap;***
2. ***Electrolyte level;***
3. ***Plate.***

Remove the cap (1) and check that the electrolyte level (2) is about 10 mm above the plates. If the level is low, fill up with distilled water to the correct level.

If the ambient temperature is below freezing point, the engine should be running for some time after adding the distilled water. Otherwise there is a risk of the electrolyte freezing.

Check that the ventilation holes in the element caps are clogged and then place the cap.

The cable shoes should be clean and tightened. Corroded cable shoes should be cleaned and greased with acid-proof vaseline.

Be careful when washing with high pressure water and do not place the jet nozzle too close to the radiator.

When disconnecting the battery, always disconnect the negative cable first. When connecting the battery, always connect the positive cable first.

Dispose of batteries properly. The battery contains environmentally harmful lead.

When performing welding work on the machine, disconnect the battery cable and then all the cables connected to the alternator.

Rubber elements and fastening screws - Check

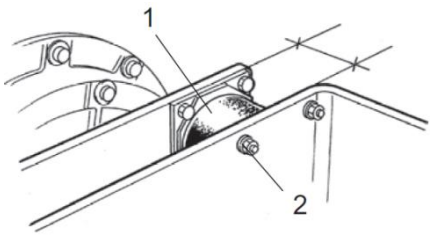

Fig. Drum, drive side
1. ***Rubber element***
2. ***Attachment screws***

Check all rubber elements (1), replace all of the elements if more than 25% of them on one side of the drum are cracked deeper than 10-15 mm (0.4-0.6 in).

Check using a knife blade or pointed object.

Check also that the screw fasteners (2) are tightened.

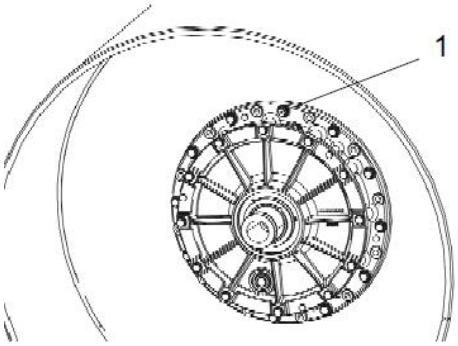

Fig. Drum
1. Ventilation screw

Drum cartridge - Cleaning the ventilation

Clean the drum's ventilation hole and ventilation screw (1). The hole is required to eliminate excess pressure inside the drum.

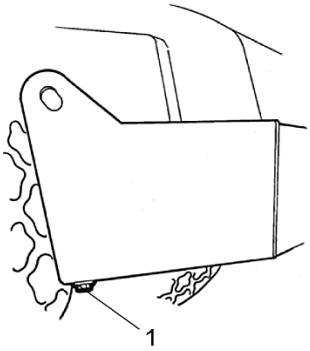

Fig. Fuel tank:
1. Drainage plug.

Fuel tank - Draining

Water and sediment in the fuel tank are removed via the drainage plug (1) in the bottom of the fuel tank.

Be very careful during draining. Do not drop the plug or else all the fuel will flow out.

Drain the roller after it has been stationary for a long time, e.g. after standing overnight. The fuel level should be as low as possible.

The roller should preferably have been standing with this side somewhat lower, so that water and sediment will gather near the drainage plug (1). Drain as follows:

- Place a container under the cock;
- Loosen the drain plug (1);
- Then open the drain plug and drain out water and sediment until only pure diesel fuel emerges at the plug.
- Screw the drainage plug again.

Store the waste and the oil and take them to a waste disposal station with environmental rules.

Hydraulic reservoir - Draining

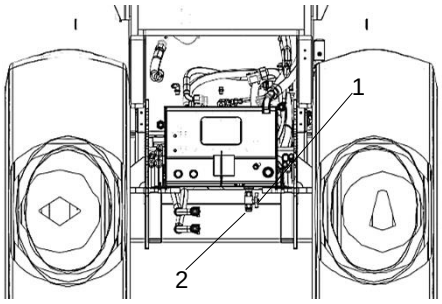

Fig. Hydraulic oil reservoir, lower part:
1. ***Drain cock;***
2. ***Plug.***

The condensate from the hydraulic reservoir is drained through the drain cock (1).
Drain the roller after it has been stationary for a long time, e.g. after standing overnight. Drain as follows:

- Remove the plug (2);
- Place a container under the cock;
- Open the cock (1);
- Let any trapped condensate run out.;
- Shut the drainage tap. Refit the plug.

Hand in the drained oil to an environment-friendly waste disposal station.

Take great care when draining warm fluid and oil. Wear protective gloves and goggles.

Diesel engine - Check the belt tension

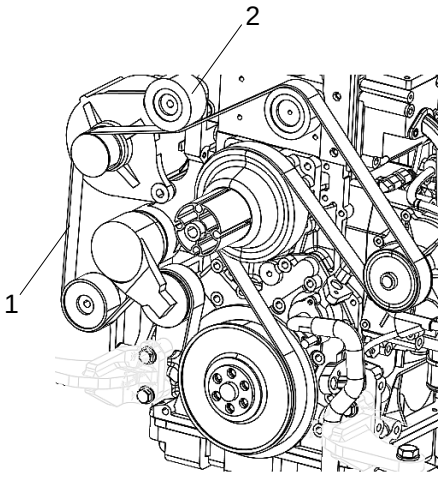

Fig. Engine:
1. ***Belt;***
2. ***Tension pulley***

Check the position of the belt in the tension pulley, it should be centered, if the belt has too much wear replace it.

Refer the engine manual for more information.

Controls – Lubrication forward-reverse control

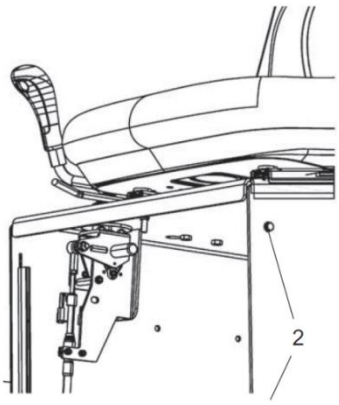

Fig. Forward-reverse control
2. ***Screws***

Lubricate the mechanical throttle forward-reverse system. Remove the outer cover at the bottom of the seat by loosening the screws (2). Lubricate the drive elements.

Refit the cover.

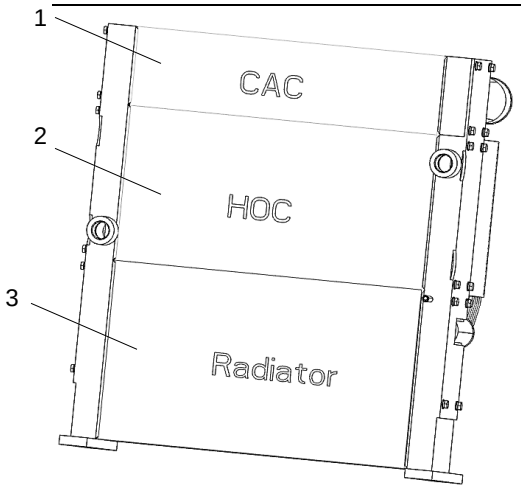

Fig. Engine compartment.
1. *Air radiator*
2. *Oil radiator*
3. *Cooling radiator*

Radiator - Check/Cleaning

Check that air can pass unobstructed through the radiators (1), (2) and (3).

Clean a dirty radiator using compressed air or a high-pressure water jet.

Blow air or direct water through the cooler in the opposite direction to that of the cooling air.

Be careful when using a high-pressure washer - do not place the nozzle too close to the radiator.

Wear protective goggles when working with compressed air or high-pressure water jets

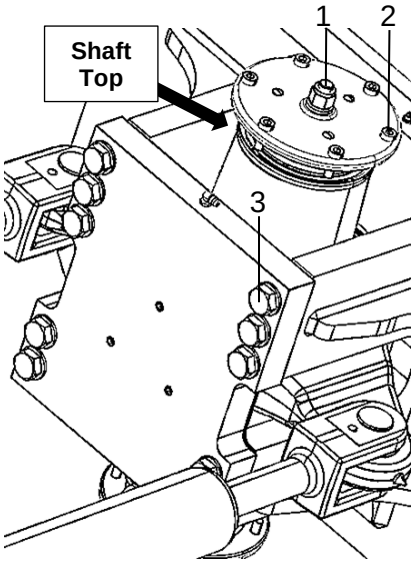

Fig. Steering hitch – Top side
1. *Nut (M16)*
2. *Shaft bolts (M10)*
3. *Cover bolts (M20)*

Steering hitch – Tightening

Nobody must be allowed near the steering joint when the engine is running. Risk of being crushed when the steering is operated. Switch off the engine and activate the parking brake before lubrificating.

The easiest way to identify if you have this type of steering hitch is that has a new type of nut (1) at the top as shown. Turn all the steering hitch to one side to have easy access to the bolts.

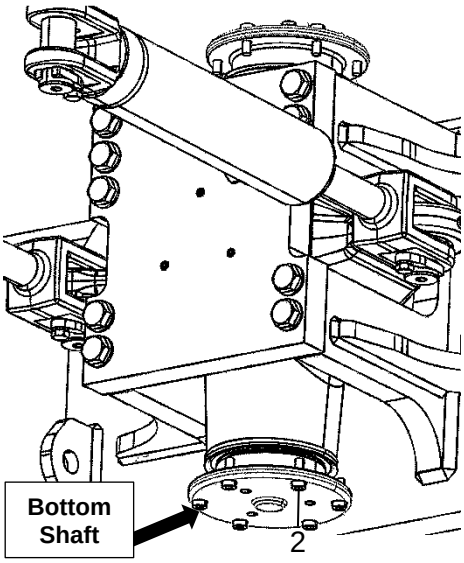

Fig. Steering hitch – Bottom side
2. *Shaft bolts (M10)*

Actual torque (Nm) should be when the machine's position is straight ahead.

Check and tighten according to the torque table below:

1	**M16**	270 Nm	1 unit
2	**M10**	40 Nm	12 units
3	**M20**	470 Nm	10 units

Bolt tightening sequences are used on safety critical and crucial joints of systems that use multiple bolts.

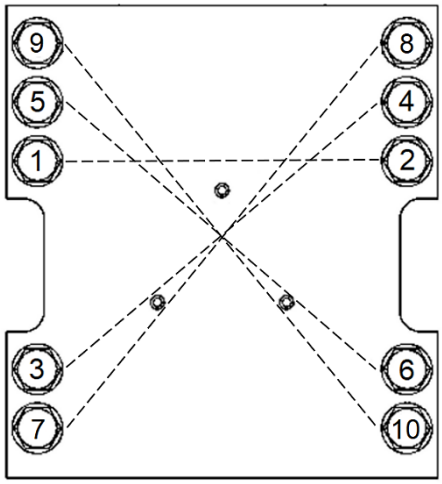

Fig. Cover bolts tightening sequence

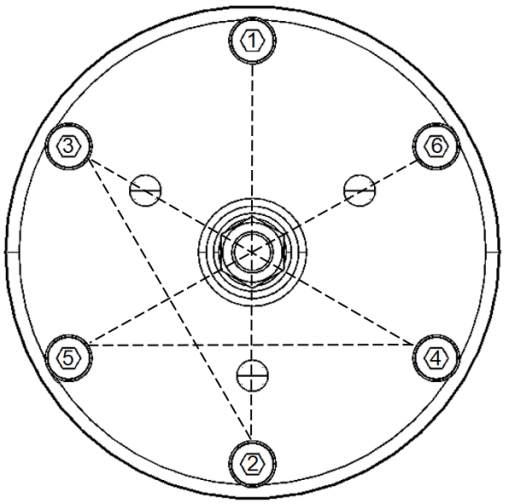

Fig. Shaft bolts tightening sequence

Drum frame shim (Steering hitch) – Check/adjust

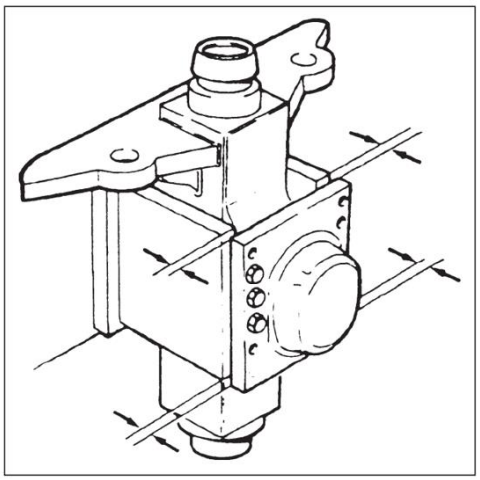

Fig. Shimming the drum frame

Check/adjust the drum frame shim **every 1.000 hours**, or if any unusual noises are noticed (an indication of excessive clearance is chattering noise at the pivot points).

1. With the engine running at low idle speed, turn the steering wheel from side to side just enough to start the frame turning in each direction.

2. Watch for excessive movement between the front frame plates and the horizontal pivots of the steering link in the bearing area. Excessive movement indicates excessive clearance. A chattering noise may also be heard.

Always contact the machine dealer to drum frame shim (steering hitch) check and adjustment.

Maintenance, 2000 hours

Every 2.000 hours of operation (annually)

Hydraulic filter - Replacement

Wear protective goggles when working with compressed air.

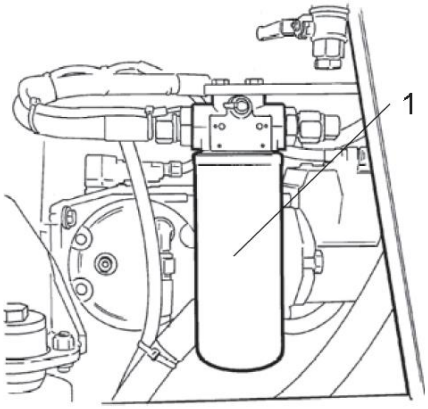

Fig. Engine compartment.
1. Hydraulic oil filter.

Clean carefully around the hydraulic oil filter.

Remove the oil filter (1) and hand in to an environment-friendly waste disposal station. This is a single-use filter and cannot be cleaned.

Make sure that the old sealing ring is not left on the filter holder, otherwise, this could cause leakage between the new seal and the old one.

Clean carefully around the filter holder's sealing surfaces.

Apply a thin coat of fresh hydraulic fluid on the new filter seal.

First tighten the filter until its seal is in contact with the filter attachment. Then turn an additional half revolution. Do not tighten the filter too hard as this could damage the gasket.

Start the engine and check that there is no leakage of hydraulic fluid from the filter. Check level of fluid in the sight glass (3) and top up as required.

Air conditioning (Optional) Fresh air filter – Change/Clean

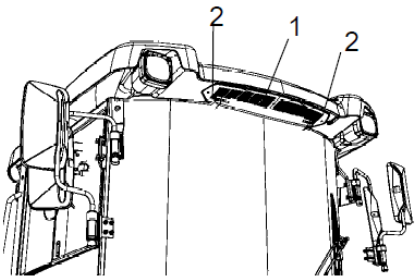

Fig. Cab
1. Filters (2x)
2. Screws (3x)

There is a fresh air filter (1), located at the front of the cab. Remove the three screws (2) and remove the protective cover.

Clean or replace them with new filters
It may be necessary to change the filters more often if the machine is working in a dusty environment.

Diesel engine - Oil and filter change

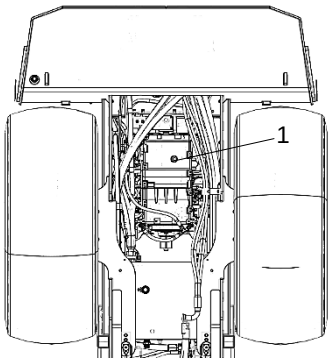

Fig. Engine left side:
2. Drain plug;

Take great care when draining warm fluid and oil. Wear protective gloves and goggles.

The oil drain plug (1) can be accessed most easily under the engine. Shut down the machine and drain the oil when the engine is warm. Place a container with a minimum capacity of 19 liters under the drain plug.

Replace the engine oil filter at the same time. Refer to the engine manual.

Value of plug tightening torque: 24 N.m

Hand in the drained oil and filter to an environment-friendly waste disposal station.

Diesel engine - Fuel filter and pre-filter Replace

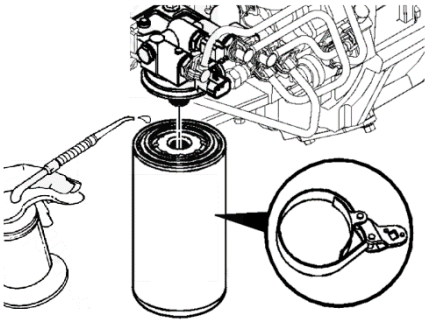

Fig. Fuel filter

Remove the threaded fuel filter using the filter wrench.

Lubricate the O-ring with clean engine oil.

Do not pre-fill the engine fuel filter.

Install the filter in the filter head. Tighten the filter until the gasket touches the surface of the filter head. Tighten the fuel filter plus ¾ turn after contact.

Bleed the fuel system after installing the fuel filter.

Refer to the bleed procedure in the engine manual.

Air filter – Replace the primary and secondary air filters

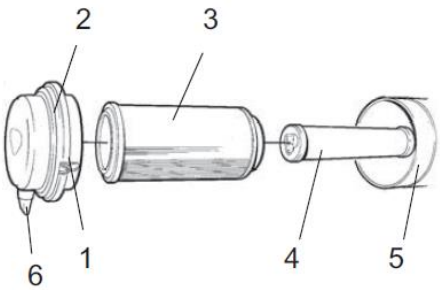

Fig. Air filter
1. *Clips*
2. *Cover*
3. *Main (primary) filter*
4. *Backup (secondary) filter*
5. *Filter housing*
6. *Dust valve*

Change the air cleaner's main filter when the warning lamp on the display lights when the diesel engine is operating at full speed

Release the clips (1), pull off the cover (2), and pull out the main filter (3).

Remove the backup filter and replace (4).
Clean the air filter if necessary, see section Air Filter - Clean.

When replacing the main filter (3), insert a new filter and refit the air cleaner in the reverse order.
Check the condition of the dust valve (6); replace if necessary.

When refitting the cover, make sure that the dust valve is positioned downwards.

Rear axle differential - Oil change

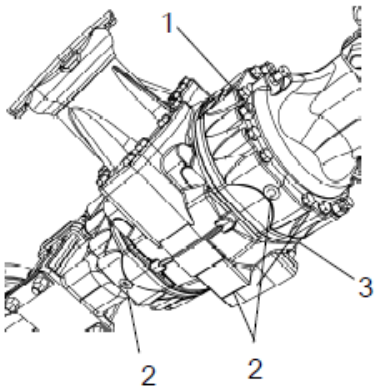

Fig. Rear axle.
1. *Filler/level plug;*
2. *Drain plug;*
3. *Filler plug.*

Never work under the roller when the engine is running. Park on a level surface. Block the wheels securely.

Clean and remove the three level/filler plugs (1) and (3) and all three drain plugs (2).

The level/filler plugs are located on the front and rear of the axle, and the drain plugs are located on the underside and rear. Drain the oil into a container. The volume is approx. 12,5 liters (13,2 qts).

Deliver the drain oil to environmentally correct handling.

Refit the drainage plugs and top up with fresh oil until the correct level is reached. Refit the level/filler plugs. Use transmission oil, see Lubricant Specification.

See lubricant specification.

.

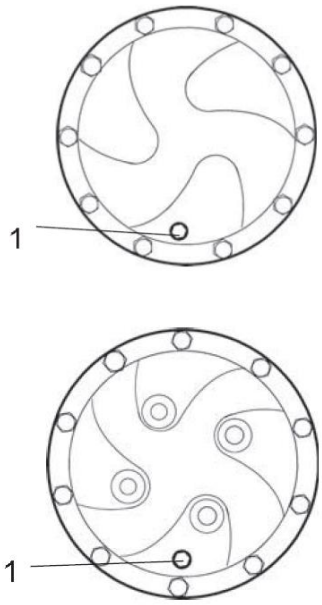

Fig. Oil drain - Planetary gear:
1. Filler /level plug.

Rear axle planetary gear - Oil drain

Position the roller with the plug (1) at its lowest position.

Clean, unscrew the plug (1) and drain the oil into a suitable receptacle. The volume is approximately 2 liters (2,1 qts).

Deliver the drain oil to environmentally correct handling.

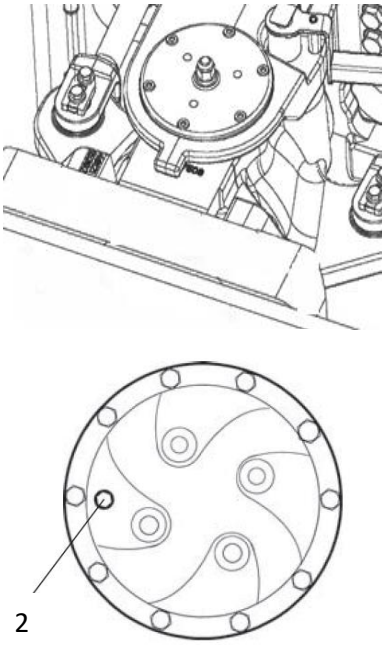

Fig. Oil filler – Planetary gear:
2. Filler /level plug.

Rear axle planetary gear - Oil change / Oil filler

Position the roller so that the plug (1) in the planetary gear is at "9 o'clock".

Clean and remove the plug.

Fill with oil to lower edge of level hole. Use transmission oil. See the lubrication specification.

Clean and refit the plug (1).

Check the fluid level in the same way on the rear axle's other planetary gear.

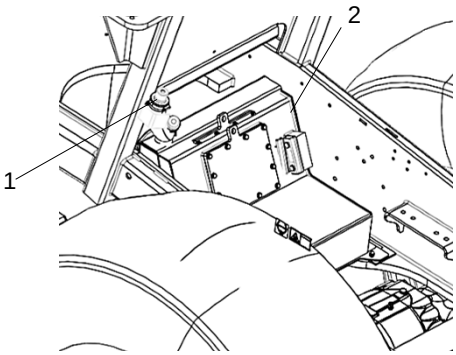

Fig. Hydraulic reservoir.
1. *Filler neck*
2. *Sight glass.*

Hydraulic reservoir - Oil change

Fill with the new hydraulic oil (1). See the lubricant specifications for more information on quality.

Start the diesel engine and test the hydraulic functions. Check the oil level in the reservoir (2) and, if necessary, complete the level.

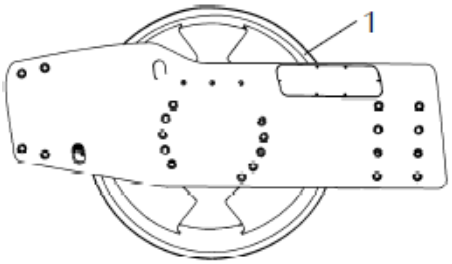

Fig. Drum, left side

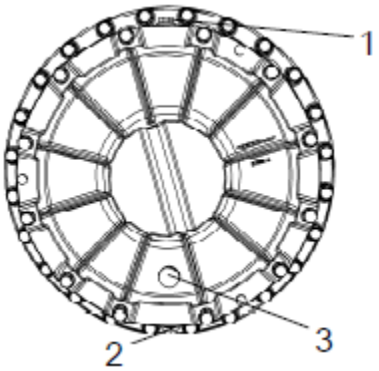

Fig. Cartridge, left side
1. *Filler plug*
2. *Drain plug*
3. *Sight glass*

Drum cartridge - Oil change

Parking the roller on a flat surface so that the filler plug (1) is perpendicular.

Place a receptacle for about 5 liters (1.32 gal) under the drain plug (2).

Observe care when draining drum oil/hot drum oil. Wear protective gloves and goggles.

Save the oil and hand in to an environment-friendly waste disposal station.

Clean and unscrew the filler plug (1) and the drain plug (2).

Allow all the oil to run out. Fit the drain plug and fill with new lubricant oil.

See the lubricant specifications for more information on quality.

Drum gearbox - Oil change

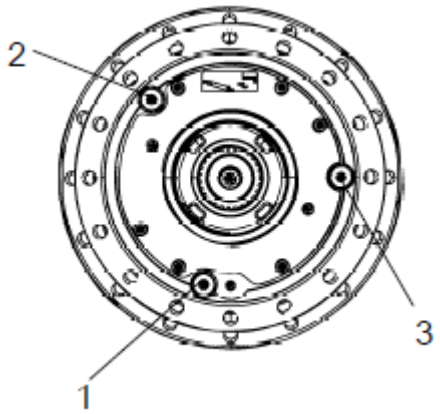

Fig. Drum gearbox
1. ***Drain plug***
2. ***Filler plug***
3. ***Level plug***

Place the machine on a flat surface so that the plugs (1) and (2) are in the position shown in the figure.

Clean and remove the plugs (1) (2) (3) and drain the oil into a container with a capacity of approximately 3,0 liters.

Replace the plug (1) and fill up with oil up to the level plug (3) in accordance with the instructions under "Drum gearbox - Oil level check".

Use transmission oil (see lubricant specifications).

Clean and refill the level plug (3) and filler plug (2).

Battery - Check condition

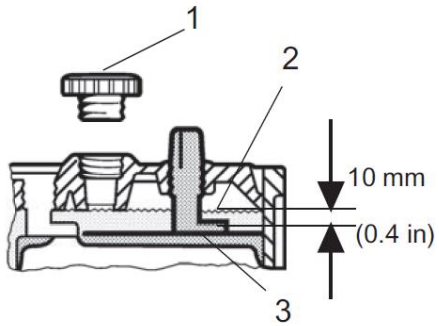

Fig. Electrolyte level in the battery:
1. ***Cap;***
2. ***Electrolyte level;***
3. ***Plate.***

Remove the cap (1) and check that the electrolyte level (2) is about 10 mm above the plates. If the level is low, fill up with distilled water to the correct level.

If the ambient temperature is below freezing point, the engine should be running for some time after adding the distilled water. Otherwise there is a risk of the electrolyte freezing.

Check that the ventilation holes in the element caps are clogged and then place the cap.

The cable shoes should be clean and tightened. Corroded cable shoes should be cleaned and greased with acid-proof vaseline.

Be careful when washing with high pressure water and do not place the jet nozzle too close to the radiator.

When disconnecting the battery, always disconnect the negative cable first. When connecting the battery, always connect the positive cable first.

Dispose of batteries properly. The battery contains environmentally harmful lead.

When performing welding work on the machine, disconnect the battery cable and then all the cables connected to the alternator.

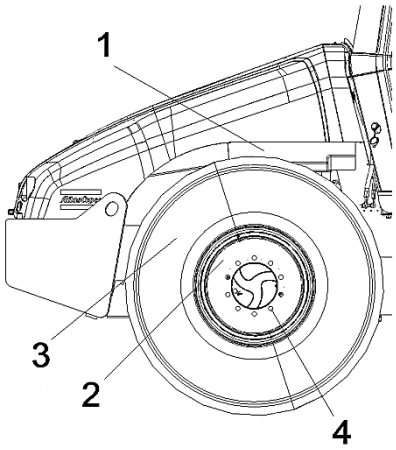

Fig. Right side of the machine
1. *Steering pump*
2. *Rear axle*
3. *Engine suspension*
4. *Wheel nuts*

Bolted joints – Check

Steering pump to Diesel engine (1), 55 N.m, lightly lubricated.

Rear axle suspension (2), 330 N.m (243 ft/lbf), oiled.

Engine suspension (3). Check if all M12 bolts (20 pieces) are tightened with 70 N.m and lightly greased.

Wheel nuts (4). Check if all nuts are tight, 630 N.mm, and oiled.

(The above information is valid only for new or replaced components).

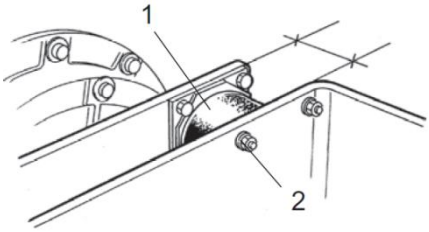

Fig. Drum, drive side
1. *Rubber element*
2. *Attachment screws*

Rubber elements and fastening screws - Check

Check all rubber elements (1), replace all of the elements if more than 25% of them on one side of the drum are cracked deeper than 10-15 mm (0.4-0.6 in).

Check using a knife blade or pointed object.

Check also that the screw fasteners (2) are tightened.

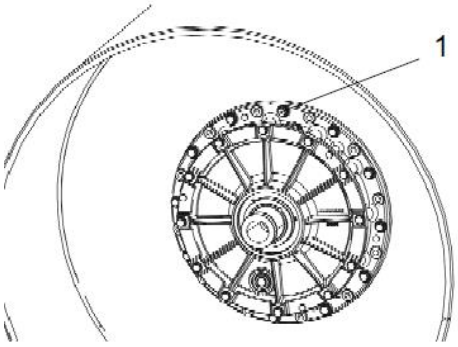

Fig. Drum
1. *Ventilation screw*

Drum cartridge - Cleaning the ventilation

Clean the drum's ventilation hole and ventilation screw (1). The hole is required to eliminate excess pressure inside the drum.

Fuel tank - Draining

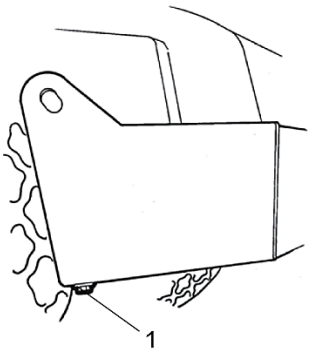

Fig. Fuel tank:
1. Drainage plug.

Water and sediment in the fuel tank are removed via the drainage plug (1) in the bottom of the fuel tank.

Be very careful during draining. Do not drop the plug or else all the fuel will flow out.

Drain the roller after it has been stationary for a long time, e.g. after standing overnight. The fuel level should be as low as possible.

The roller should preferably have been standing with this side somewhat lower, so that water and sediment will gather near the drainage plug (1). Drain as follows:

- Place a container under the cock;
- Loosen the drain plug (1);
- Then open the drain plug and drain out water and sediment until only pure diesel fuel emerges at the plug.
- Screw the drainage plug again.

Store the waste and the oil and take them to a waste disposal station with environmental rules.

Hydraulic reservoir - Draining

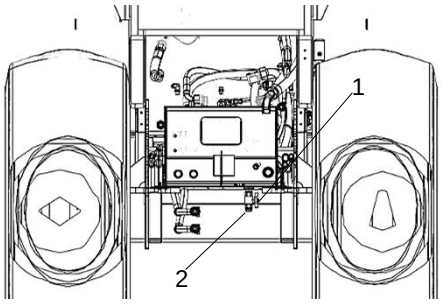

Fig. Hydraulic oil reservoir, lower part:
1. Drain cock;
2. Plug.

The condensate from the hydraulic reservoir is drained through the drain cock (1).
Drain the roller after it has been stationary for a long time, e.g. after standing overnight. Drain as follows:

- Remove the plug (2);
- Place a container under the cock;
- Open the cock (1);
- Let any trapped condensate run out.;
- Shut the drainage tap. Refit the plug.

Hand in the drained oil to an environment-friendly waste disposal station.

Take great care when draining warm fluid and oil. Wear protective gloves and goggles.

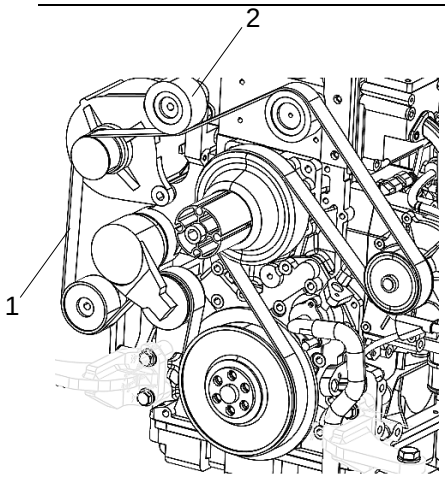

Fig. Engine:
1. *Belt;*
2. *Tension pulley*

Diesel engine - Check the belt tension

Check the position of the belt in the tension pulley, it should be centered, if the belt has too much wear replace it.

Refer the engine manual for more information.

Controls – Lubrication

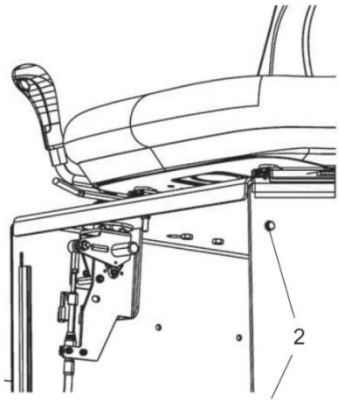

Fig. Forward-reverse control
2. *Screws*

Lubricate the mechanical throttle forward-reverse system. Remove the outer cover at the bottom of the seat by loosening the screws (2). Lubricate the drive elements.

Refit the cover.

Radiator - Check/Cleaning

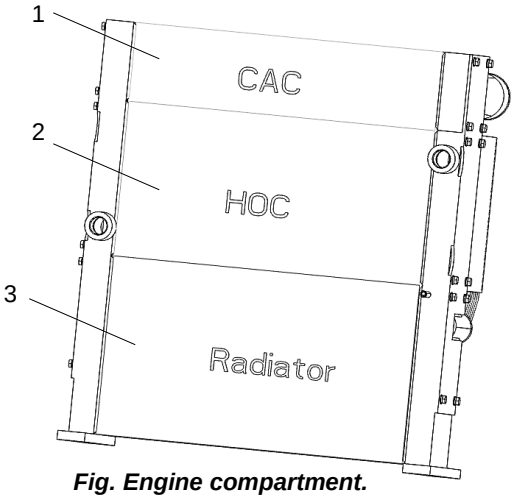

Fig. Engine compartment.
1. *Air radiator*
2. *Oil radiator*
3. *Cooling radiator*

Check that air can pass unobstructed through the radiators (1), (2) and (3).

Clean a dirty radiator using compressed air or a high-pressure water jet.

Blow air or direct water through the cooler in the opposite direction to that of the cooling air.

Be careful when using a high-pressure washer - do not place the nozzle too close to the radiator.

Wear protective goggles when working with compressed air or high-pressure water jets

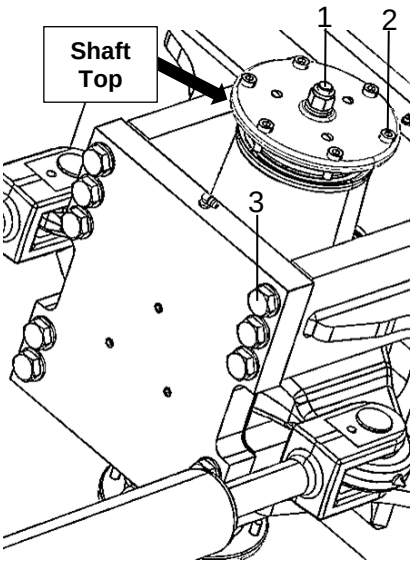

Fig. Steering hitch – Top side
1. *Nut (M16)*
2. *Shaft bolts (M10)*
3. *Cover bolts (M20)*

Steering hitch – Tightening

Nobody must be allowed near the steering joint when the engine is running. Risk of being crushed when the steering is operated. Switch off the engine and activate the parking brake before lubrificating.

The easiest way to identify if you have this type of steering hitch is that has a new type of nut (1) at the top as shown. Turn all the steering hitch to one side to have easy access to the bolts.

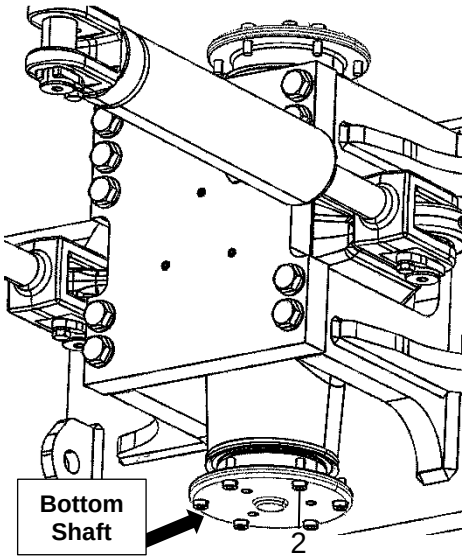

Fig. Steering hitch – Bottom side
2. *Shaft bolts (M10)*

Actual torque (Nm) should be when the machine's position is straight ahead.

Check and tighten according to the torque table below:

1	**M16**	270 Nm	1 unit
2	**M10**	40 Nm	12 units
3	**M20**	470 Nm	10 units

Bolt tightening sequences are used on safety critical and crucial joints of systems that use multiple bolts.

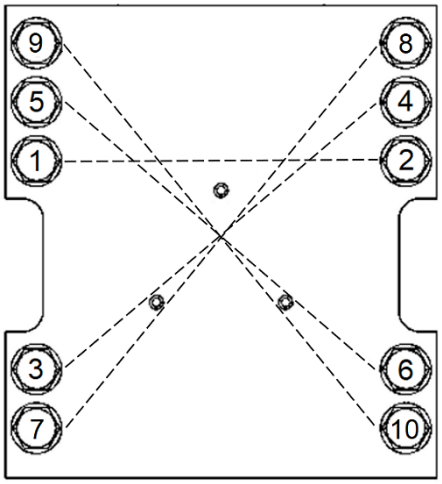

Fig. Cover bolts tightening sequence

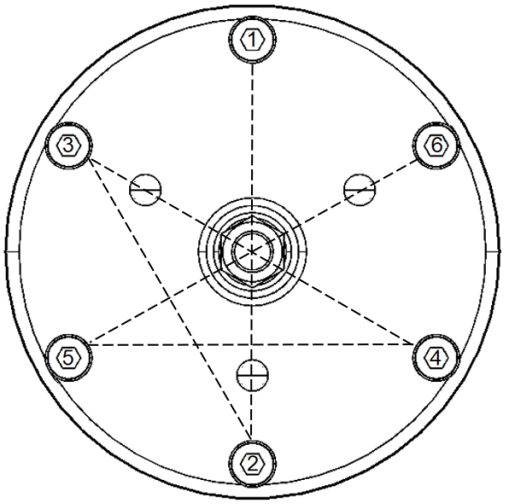

Fig. Shaft bolts tightening sequence

Assembly instructions – Converting drum D to PD

Before conversion

Mounting must be done in a workshop environment, on a clean, level base and with lifting capabilities for atleast 1000 kg (2.200 lbs) – for model CA25/30 weight per shell of 766 kg (1.690 lbs). Ensure at least 3 meters (120") of free space in front of the machine (see following sections).

Make sure the drum is well cleaned cleaned outside.

Estimated time for this retrofitting is about 6 hours. The following tools are required: Lift, at least 1000 kg (2.200 lbs); Screw clamps; Drilling machine; Drill, 22 mm (7/8 in); Tool P/N 4700382571; Torque wrench; Socket wrenches.

Mounting of pad shell

Before lifting the pad shell ensure that the lifting eyes are not damaged.

The lifting eyes on the pad shell is only for lifting the shell, should not be used to lift the entire drum.

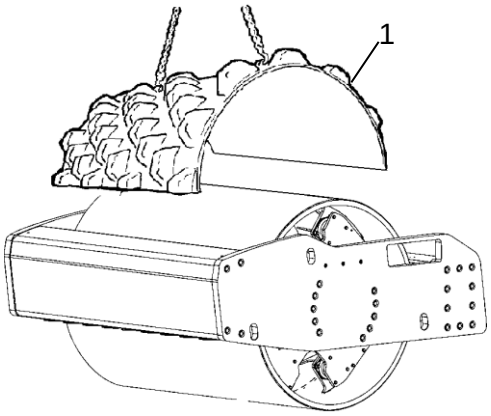

Fig. Insert shell
1. Halves shell

1. Lift the first pad half (1) and place it on the top of the drum.

Keep well clear of the hoisted object. Ensure that hoisting hooks are securely anchored.

Warning of the risk of crushing between pad shell and drum.

2. Align the pad half after the drum outer edges and secure it to the drum shell with screw clamps.

3. Drill two holes through the pad shell and the drum shell.

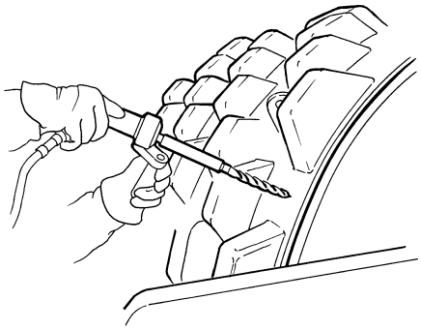

Fig. Drilling through holes

(22 mm (7/8 in) - CA25-30)

Use the two 8 mm pre-drilled holes as position guides.

4. Fit the two M20 bolts with its washer and lock nut.

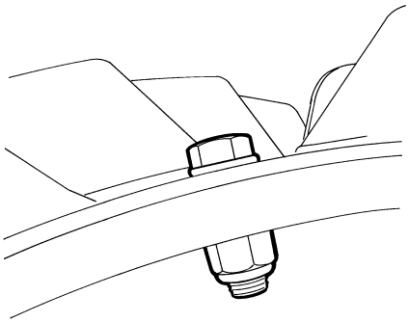

Fig. Fitted M20 bolts.

CA25-30

- Hexagon bolt M20x80
- Washer 21x36x3
- Lock nut M20

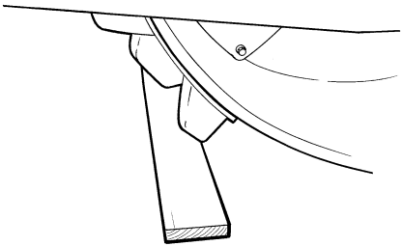

Fig. Drum movement

5. Run the roller slowly forward until the drum is located with the first fitted drum shell at the bottom.

It may help if you put a 25 mm (1 in) wooden joist where the edge of the first pad is.

The space required for this operation is 3 meters (120 in).

Make sure that no one is inside the working area of the machine while you drive it forward.

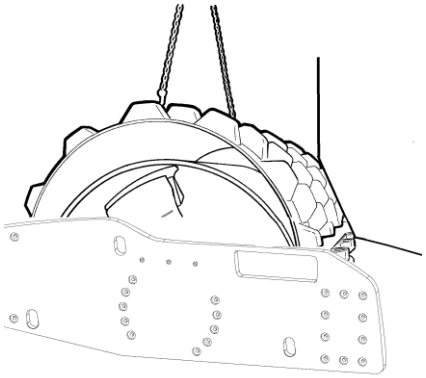

Fig. Fitting the second pad half

6. Lift the second pad half in place and align it against the outer edges of the drum and the markings on the pad halves.

Markings

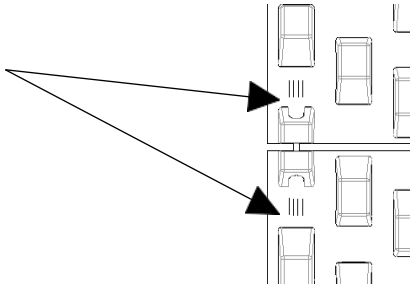

Keep well clear of the hoisted object. Ensure that hoisting hooks are securely anchored.

Warning of the risk of crushing between pad shell and drum.

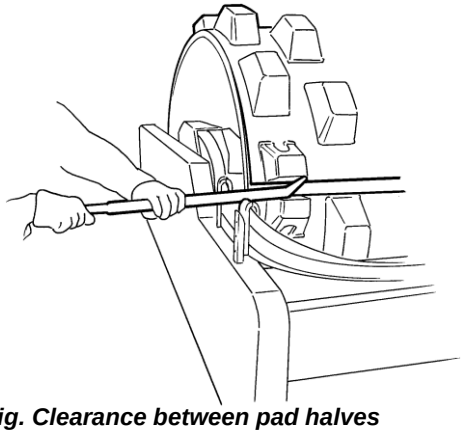

Fig. Clearance between pad halves

7. Distribute the clearance between the pad shells. This is to ensure that the bolts fit properly.

8. Lubricate the four fitting bolts (2) and fit them with the head upward in the outer positioned pads on both sides.

9. Tighten the two pad halves together. Ensure that the clearance is evenly distributed, about 25 mm (1 in), between the halves when you tighten the bolts (use tool P/N 4700382571 (CA25-30) as a counter-support).

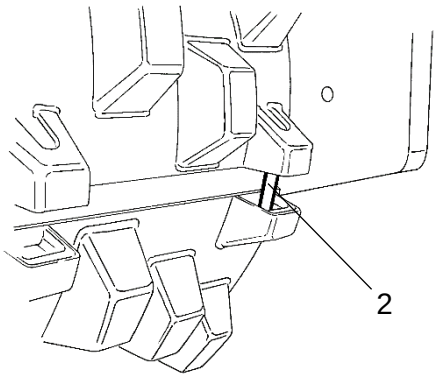

Fig. Pad halves
2. Fitting bolts x4

10. Drill two holes through the pad shell and the drum shell.
(22 mm (7/8 in) - CA25-30)

11. Fit the two M20 (CA25-30) bolts with its washer and lock nut. (Similar to the first pad half)

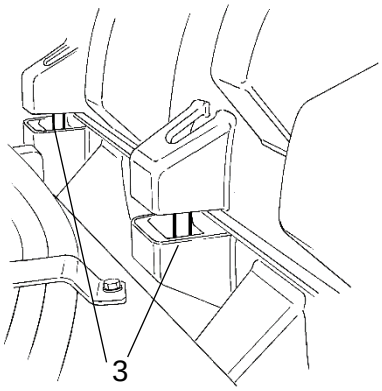

Fig. Fitting the pad half
3. Bolts

12. Fit the two middle bolts (3) with the head upwards and torque-tighten them.

13. Then unscrew the outer fitting bolts and replace them with the bolts supplied.
(M20x140 - CA25-30)

14. When all four bolts are torqued according to the accompanying drawings, reverse the machine half a turn of the drum to gain access to the second joint.

Repeat according to the above.

Ensure that clearance is equal between the pad shells. Use tool P/N **4700382571**.

Assembly instructions – Mounting of scrapers

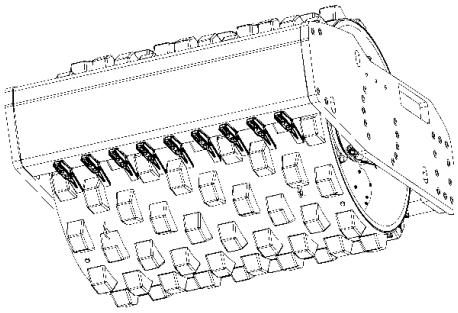

Fig. Mounted scrapers for pad shell

Scrapers for the pad shell is to be mounted where the smooth drum scrapers earlier where mounted.

Adjust the scrapers so that the distance between the scraper and drum sweep is about 25 mm (1 in).

It is important to note that the roller moves when the machine turns, if one adjusts closer than the above value, you can damage the scrapers or have an increased wear of the roller.

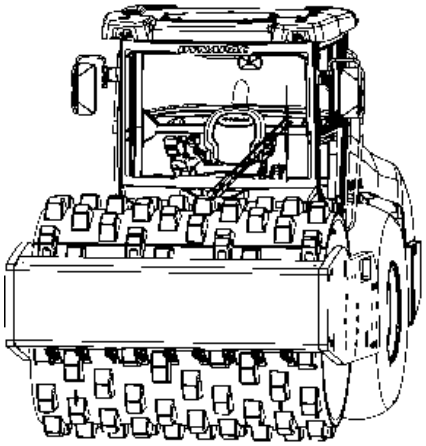

Fig. Machine with pad shell

After final assembly

The pad shell is now fitted and the roller is ready for operation.

Check the **Maintenance schedule** section for maintenance.

Revision

DATE	VERSION	MODIFICATION
08/07/2020	0	General
10/07/2020	1	Dynapac oils part number added in symbols and lubrificants.
02/17/2021	2	Steering hitch torque adjustment added.
07/06/2021	3	Checking of air conditioning drain added and maintenance schedule updated.
04/07/2022	4	Rear axle and planetary oil change added in the FIRST 50 hours of operation.
03/03/2023	5	Adjustment in Steering hitch – Tightening section, addition of Assembly Instruction drum D to PD and Drum frame shim (Steering hitch) – Check/adjust sections and section Safety – When operating updated.
03/03/2023	6	Steering hitch torque from 330Nm to 470Nm (M20).
03/03/2023	7	Steering hitch torque from 174Nm to 270Nm (M16).
05/04/2023	8	Decal 1. Warning, crush zone removed, location changed of decal 4. Warning, ballasted tire, new decal 18. Warning, apply locking device added.
05/09/2023	9	Machine description – Decals section updated, correction of Tire dimensions from 16psi to 26psi and engine oil maintenance and filter replacement from 250h to 500h.

Dynapac do Brasil Industria e Comercio de Máquinas Ltda.
Rua Georg Schaeffler, 430, Sorocaba/SP, Brasil
Tel.: +55 (15) 3412-7500 Fax.: +55 (15) 3412-7522
www.dynapac.com