JIG SAW

MODEL 4340FCT

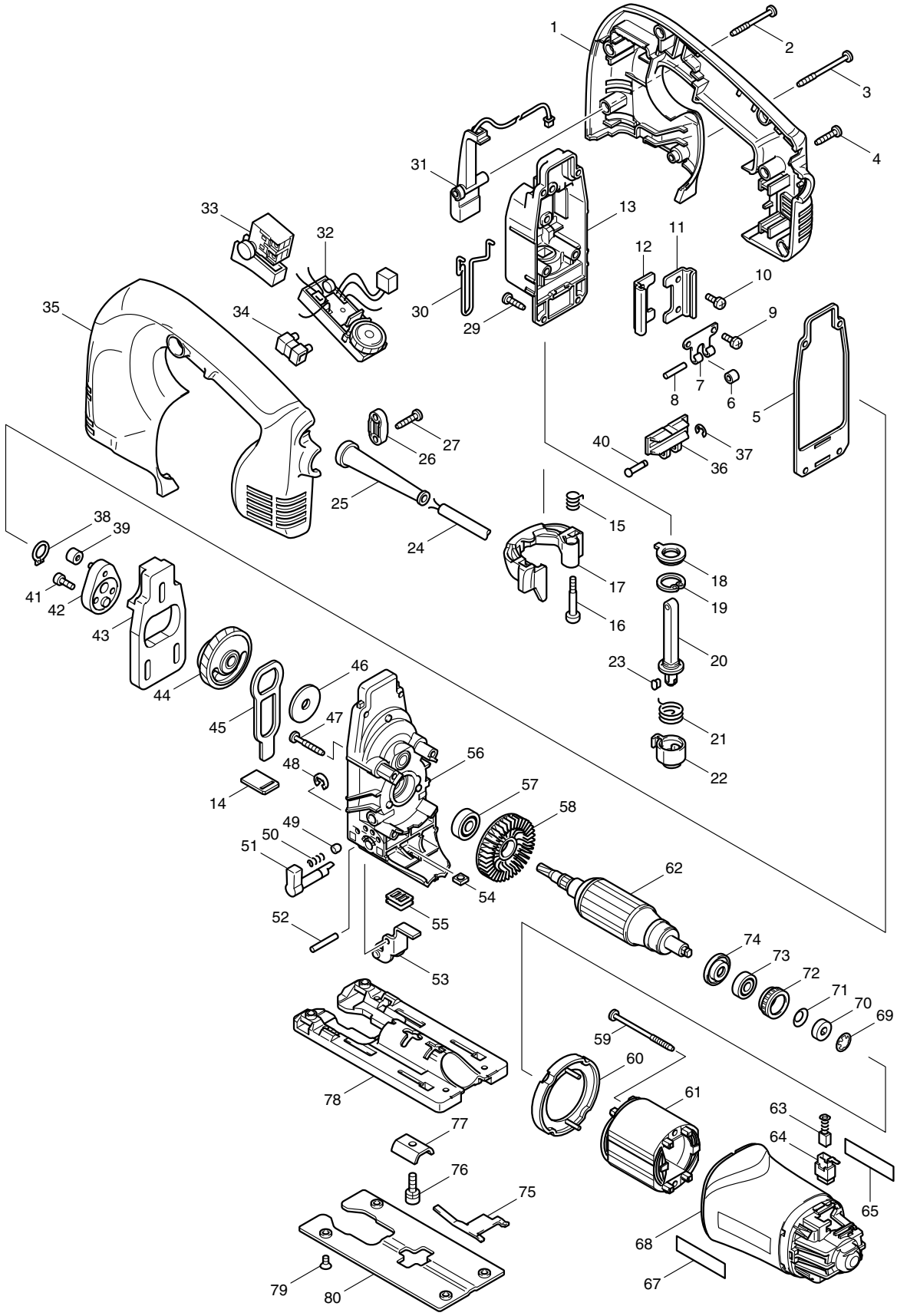

Item No.	Part No.	Qty. Used	Description
1	183424-6	1	HANDLE SET (INCL. FIG. 35)
2	266048-4	1	TAPPING SCREW 4X40
3	266091-3	1	TAPPING SCREW 4X50
4	265995-6	5	TAPPING SCREW 4X18
5	442138-9	1	PACKING
6	214031-5	1	PLANE BEARING 4
7	232207-2	1	LEAF SPRING
8	256117-9	1	PIN 4
9	911111-5	2	PAN HEAD SCREW M4X10
10	911111-5	2	PAN HEAD SCREW M4X10
11	345240-6	1	LINEAR GUIDE
12	345240-6	1	LINEAR GUIDE
13	153338-3	1	GEAR HOUSING COVER CPL.
14	417839-8	1	SEAL PLATE
15	231659-4	1	TORSION SPRING 6
16	265026-1	1	+ PAN HEAD SCREW M4
17	417842-9	1	TOOL OPENER
18	421817-2	1	DUST COVER
19	962068-3	1	RETAINING RING R-18
20	165326-8	1	ROD
21	231660-9	1	TORSION SPRING 15
22	310136-0	1	BLADE HOLDER
23	310135-2	1	PUSH PIN
24	664064-4	1	POWER SUPPLY CORD (2X18X8 SJ)
25	682559-5	1	CORD GUARD 8
26	687063-9	1	STRAIN RELIEF
27	265995-6	2	TAPPING SCREW 4X18
29	266034-5	4	TAPPING SCREW CT 4X16
30	324233-6	1	SAFETY WIRE
31	631470-8	1	LED CIRCUIT
32	631458-8	1	CONTROLLER
33	650202-4	1	SWITCH SGEL115CDY-8 (SINGLE W/LOCK)
34	654532-5	1	TERMINAL BLOCK 1P
35	183424-6	1	HANDLE SET (INCL. FIG. 1)
36	310134-4	1	SLIDER
37	961017-7	1	STOP RING E-3
38	961004-6	1	RETAINING RING S-8
39	212014-9	1	NEEDLE BEARING 407
40	268090-1	1	PIN 4
41	265353-6	2	HEX. SOCKET HEAD BOLT M4X12
42	153336-7	1	CRANK COMPLETE
43	313108-4	1	BALANCE PLATE
44	153335-9	1	GEAR COMPLETE
45	345235-9	1	PUSH PLATE
46	253877-4	1	FLAT WASHER 8
47	266050-7	4	TAPPING SCREW 4X30
48	961018-5	1	STOP RING E-5
49	286032-3	1	CAP 5
50	233139-6	1	COMPRESSION SPRING 3
51	272244-4	1	LEVER 17
52	268063-4	1	PIN 4
53	153334-1	1	RETAINER COMPLETE
54	252171-1	1	SQUARE NUT M5-8
55	421816-4	1	DUST SEAL
56	153337-5	1	GEAR HOUSING COMPLETE
57	210005-4	1	BALL BEARING 608DDW
58	241881-5	1	FAN 52
59	266052-3	2	TAPPING SCREW 4X60
60	417838-0	1	BAFFLE PLATE
61	593506-0	1	FIELD ASS'Y 115V (INCL. 2 EA. 654069-2 RECEPTACLE)
62	517396-7	1	ARMATURE ASS'Y 115V (INCL. FIG. 57,58,73,& 74)
63	191927-6	1	CARBON BRUSH CB-407 2PC./SET
64	643936-6	2	BRUSH HOLDER
65	819063-3	1	MAKITA LABEL
67	819063-3	1	MAKITA LABEL
68	183435-1	1	MOTOR HOUSING (INCL. FIG. 65 & 67)
69	259039-2	1	SELF LOCK 6
70	688117-5	1	MAGNET SLEEVE
71	267756-0	1	WAVE WASHER 6
72	421494-0	1	RUBBER RING 19
73	211021-9	1	BALL BEARING 607LLB
74	681636-0	1	INSULATION WASHER
75	232208-0	1	LEAF SPRING
76	922226-3	1	HEX. SOCKET HEAD BOLT M5X18
77	345237-5	1	CRANK PLATE
78	317565-8	1	BASE
79	912107-9	4	COUNTERSUNK HEAD SCREW M4X8
80	345238-3	1	BASE PLATE
D02	654069-2	2	RECEPTACLE
D03	654077-3	1	INSULATED TERMINAL FV2-M3
D04	654509-0	2	CONNECTOR 2-SD
D06	652008-6	2	PAN HEAD SCREW M3.5X7
ACCESSORIES			
A01	415524-7	1	ANTI-SPLINTERING DEVICE
A02	417852-6	1	COVER PLATE
A03	792473-8	1	JIG SAW BLADE B-22
A04	792529-7	1	JIG SAW BLADE B-10
A05	792729-9	1	JIG SAW BLADE BR-13
A06	783202-0	1	HEX. WRENCH 4
A07	183475-9	1	PLASTIC CARRYING CASE (INCL. 183091-7 SLIDE LATCH RL SET, & 819033-2 MAKITA LABEL)