makita PORTABLE BAND SAW MODEL 2106

IMPORTANT — To assure product SAFETY and RELIABILITY, repairs, maintenance or adjustments should be performed by MAKITA Service Centers or other qualified service organizations. Always use MAKITA replacement parts.

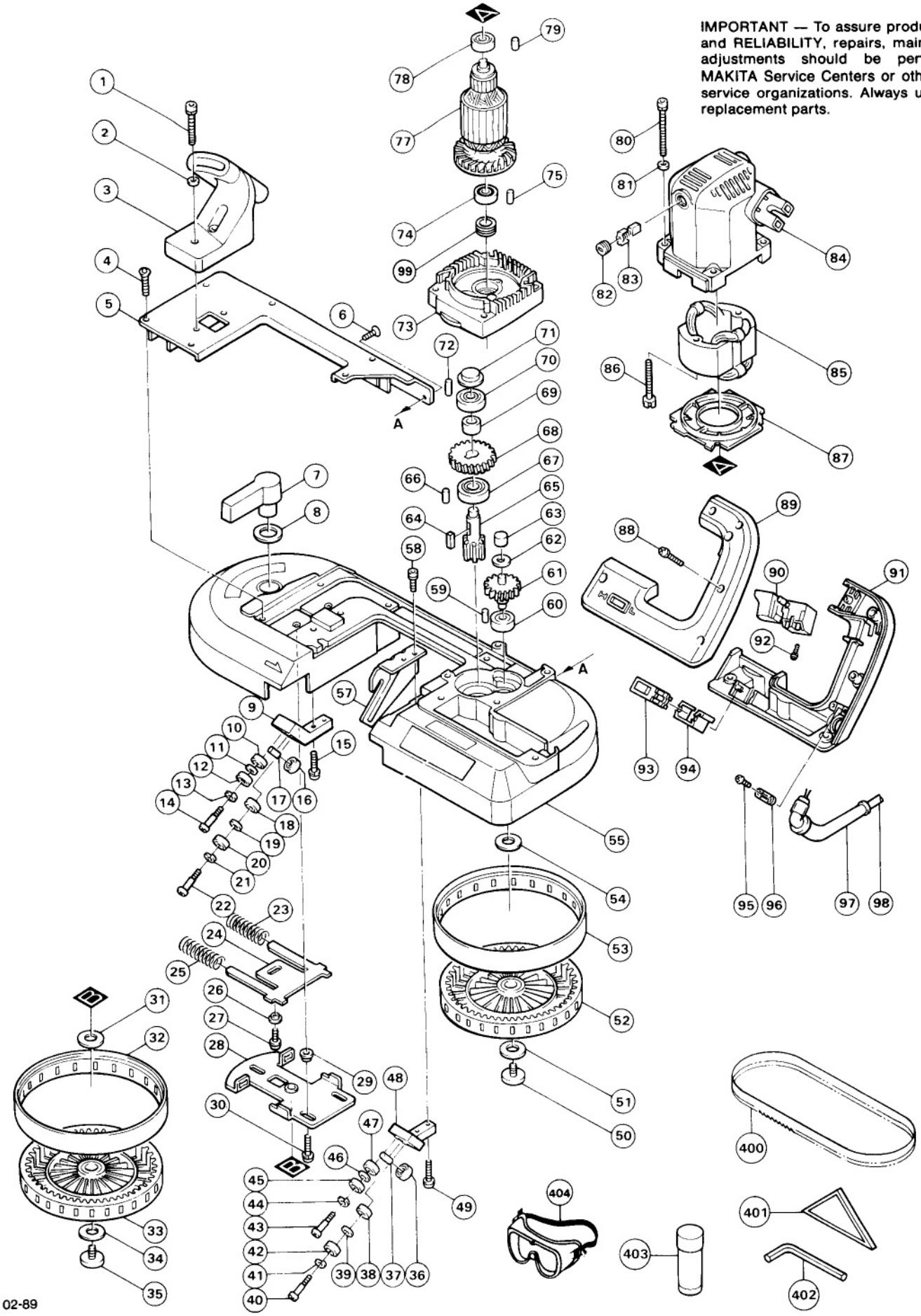

02-89

Fig.	Part No.	Qty. Used	Description
1	922361-7	2	HEX. SOCKET HEAD BOLT M6×40
2	941152-7	2	FLAT WASHER 6
3	273624-7	1	GRIP 80
4	265899-2	6	HEX. SOCKET HEAD BOLT M5×22
5	164869-7	1	FRAME COVER
6	251951-2	4	HEX. SOCKET HEAD BOLT M5×10
7	272223-2	1	LEVER 60
8	267041-1	1	FLAT WASHER 20
9	316025-7	1	UPPER HOLDER
10	210006-2	1	BALL BEARING 696ZZ
11	941152-7	1	FLAT WASHER 6
12	210006-2	1	BALL BEARING 696ZZ
13	942151-2	1	SPRING WASHER 6
14	251337-0	1	PAN HEAD SCREW M5
15	911248-8	2	PAN HEAD SCREW M5×28
16	210006-2	1	BALL BEARING 696ZZ
17	256033-5	1	PIN 6
18	210006-2	1	BALL BEARING 696ZZ
19	941152-7	1	FLAT WASHER 6
20	210006-2	1	BALL BEARING 696ZZ
21	942151-2	1	SPRING WASHER 6
22	251337-0	1	PAN HEAD SCREW M5
23	231449-5	1	COMPRESSION SPRING 11
24	343489-2	1	TENSION PLATE
25	231449-5	1	COMPRESSION SPRING 11
26	343494-9	1	SLEEVE 5
27	911221-8	1	PAN HEAD SCREW M5×16
28	163276-1	1	SLIDE PLATE
29	343494-9	3	SLEEVE 5
30	911244-6	3	PAN HEAD SCREW M5×25
31	253749-3	1	FLAT WASHER 16
32	421333-4	1	RUBBER TIRE
33	152325-9	1	WHEEL COMPLETE (Incl. Plane Bearing 16 214209-0)
34	253749-3	1	FLAT WASHER 16
35	265900-3	1	HEX. SOCKET HEAD BOLT M6×12
36	210006-2	1	BALL BEARING 696ZZ
37	256033-5	1	PIN 6
38	210006-2	1	BALL BEARING 696ZZ
39	941152-7	1	FLAT WASHER 6
40	251337-0	1	PAN HEAD SCREW M5
41	942151-2	1	SPRING WASHER 6
42	210006-2	1	BALL BEARING 696ZZ
43	251337-0	1	PAN HEAD SCREW M5
44	942151-2	1	SPRING WASHER 6
45	210006-2	1	BALL BEARING 696ZZ
46	941152-7	1	FLAT WASHER 6
47	210006-2	1	BALL BEARING 696ZZ
48	316026-2	1	LOWER HOLDER
49	911248-8	1	PAN HEAD SCREW M5×28
50	265900-3	1	HEX. SOCKET HEAD BOLT M6×12
51	253749-3	1	FLAT WASHER 16
52	152325-9	1	WHEEL COMPLETE (Incl. Plane Bearing 16 214209-0)
53	421333-4	1	RUBBER TIRE
54	253749-3	1	FLAT WASHER 16
55	151303-6	1	FRAME COMPLETE (Incl. Plane Bearing 20 214304-6; Fig. 59, 66)
57	343490-7	1	STOPPER PLATE
58	922241-7	2	HEX. SOCKET HEAD BOLT M5×25
59	263002-9	1	RUBBER PIN 4
60	211034-0	1	BALL BEARING 608
61	226080-0	1	GEAR COMPLETE 11-45
62	253139-0	1	FLAT WASHER 8
63	212004-2	1	NEEDLE BEARING 810
64	254202-2	1	KEY 4
65	221980-9	1	SPUR GEAR 9
66	263005-3	1	RUBBER PIN 6
67	211108-7	1	BALL BEARING 6201LB
68	221765-3	1	HELICAL GEAR 42
69	257619-8	1	SLEEVE 12
70	211064-1	1	BALL BEARING 6000
71	286028-4	1	CAP 26
72	263002-9	1	RUBBER PIN 4
73	157916-1	1	GEAR HOUSING
74	211058-6	1	BALL BEARING 629LB
75	263002-9	1	RUBBER PIN 4
77	612946-4	1	ARMATURE (Incl. Fig. 74, 78)
78	211033-2	1	BALL BEARING 608LB
79	263002-9	1	RUBBER PIN 4
80	922381-1	4	HEX. SOCKET HEAD BOLT M6×60
81	941152-7	4	FLAT WASHER 6
82	643600-9	2	BRUSH HOLDER CAP
83	643101-7	2	CARBON BRUSH (CB-101)
84	157915-3	1	MOTOR HOSING (Incl. 2 ea. Brush Holder 643603-3; Fig. 79)
85	622711-3	1	FIELD (Incl. 2 ea. Garter Spring 654019-7)
86	925273-3	2	HEX. BOLT M5×50
87	414067-6	1	BAFFLE PLATE
88	911248-8	5	PAN HEAD SCREW M5×28
89	182034-6	1	HANDLE SET (Incl. Fig. 91)
90	651216-6	1	SWITCH
91	182034-6	1	HANDLE SET (Incl. Fig. 89)
92	652008-6	4	PAN HEAD SCREW M3.5×7
93	651562-7	1	SWITCH
94	421338-4	1	SWITCH PROTECTOR
95	911133-5	2	PAN HEAD SCREW M4×18
96	687002-9	1	STRAIN RELIEF
97	682502-4	1	CORD GUARD
98	664064-4	1	POWER SUPPLY CORD
99	331328-8	1	SEAL

ACCESSORIES

400	792559-A	1	BAND SAW BLADE 18 (C.Steel)
401	762001-3	1	TRIANGULAR RULE
402	783209-6	1	HEX. WRENCH 4
403	191897-9	1	CUTTING WAX
404	191686-2	1	SAFETY GOGGLES