TB66J PARTS MANUAL

TB66J PARTS MANUAL

Courtesy of Crane.Market

Contents

GENERAL INFORMATION

GENERAL INFORMATION 1-1

REPAIR PARTS

CHASSISS/TURNTABLE MOUNTING 4X2 – BEFORE FEBRUARY 2001 2-1
DRIVE INSTALLATION 4X2 2-2
STEERING 4X2 2-3
STEERING INSTALLATION 4X2 2-4
STEERING YOKE AND WHEEL 4X2 2-5
CHASSIS/TURNTABLE MOUNTING 4X2 2-6
CHASSIS COVER INSTALLATION 4X4 2-7
CHASSISS/TURNTABLE MOUNTING 4X4 2-8
COUNTERWEIGHT SUBASSEMBLY 4X4 2-9
DRIVE 4X4 – BEFORE APRIL 2006 2-10
DRIVE 4X4 – AFTER MARCH 2006 2-11
DRIVE 4X4, AFTER JULY 2006 2-12
DRIVE 4X4, AFTER MAY 2008 2-13
STEERING YOKE AND WHEEL 4X4 2-14
FRONT WHEEL DRIVE 4X4 2-15
TURNTABLE ELECTRICAL – KU 2-16
LIFT/SWING/COUNTERWEIGHT 2-17
FUEL TANK – BEFORE JUNE 2007 2-18
FUEL TANK - AFTER MAY 2007 2-19
HYDRAULIC OIL RESERVIOR MOUNTING 2-20
BOOMS – BASE END 2-21
BOOM AND HOSE CARRIER – S/N TB66J-04-000099 AND BEFORE 2-22
BOOM/HOSE CARRIER/JIB ASSEMBLY ANSI – S/N TB66J-04-000100 AND AFTER 2-23
BOOM/HOSE CARRIER/JIB ASSEMBLY ANSI – AFTER APRIL 2015 2-24
BOOM/HOSE CARRIER/JIB ASSEMBLY CE – AFTER MARCH 2015 2-25
HOSE CARRIER ASSEMBLY – AFTER APRIL 2015 2-26
HOSE CARRIER ASSEMBLY--S/N TB66J-04-000099 AND BEFORE 2-27
HOSE CARRIER ASSEMBLY – SN TB66J-04-000100 AND AFTER 2-28
BOOMS – BEFORE MARCH 2001 2-29
BOOMS – AFTER JULY 2006 2-30
BOOMS ASSEMBLY – S/N TB66J-04-000100 AND AFTER 2-31
BOOMS ASSEMBLY – AFTER APRIL 2015 2-32
BOOMS – AFTER APRIL 2009 2-33
EXTENSION CYLINDER ASSEMBLY 2-34
JIB BOOM ASSEMBLY 2-35
6 FT JIB ASSEMBLY ANSI – S/N TB66J-04-000100 AND AFTER 2-36
6 FT JIB ASSEMBLY CE – AFTER MARCH 2015 2-37
ENGINE MOUNTING CUMMINS – BEFORE AUGUST 2008 2-38
ENGINE TRAY CUMMINS 3.3 TIER 3 – AFTER MARCH 2007 2-39
ENGINE TRAY CUMMINS 3.3 – BEFORE MARCH 2008 2-40

Courtesy of Crane.Market

ENGINE TRAY CUMMINS 3.3 TIER 3 – AFTER JANUARY 2013 2-41
ENGINE/RADIATOR ASSEMBLY – CUMMINS 3.3 TIER 3 2-42
ENGINE MOUNTING – DEUTZ F4L-1011F 2-43
ENGINE DEUTZ F4L-1011F – BEFORE OCTOBER 2006 2-44
ENGINE DEUTZ F4L-1011F – AFTER SEPTEMBER 2006 2-45
ENGINE DEUTZ F4L-1011F – AFTER FEBRUARY 2009 2-46
ENGINE MOUNTING FORD LRG 425 WITH ECM 2-47
ENGINE MOUNTING FORD LRG 425 WITH EPM 2-48
ENGINE FORD LRG 425 2-49
EXHAUST/AIR CLEANER INSTALLATION FORD – BEFORE APRIL 2005 2-50
EXHAUST/AIR CLEANER INSTALLATION FORD – AFTER MARCH 2005 2-51
ENGINE INSTALLATION – GM TIER 3 2-52
ENGINE SUBASSEMBLY – GM TIER 3 2-53
RADIATOR ASSEMBLY GM 2-54
AIR CLEANER INSTALLATION GM 2-55
ENGINE SUBASSEMBLY – KU V2403 2-56
AIR CLEANER – DEUTZ 2-57
EXHAUST AND AIR CLEANER – DEUTZ 2-58
AIR CLEANER – CU/FORD/GM 2-59
PLASTIC COWLING DEUTZ – BEFORE MARCH 2006 2-60
PLASTIC COWLING DEUTZ – AFTER OCTOBER 2006 2-61
PLASTIC COWLING DEUTZ – AFTER SEPTEMBER 2014 2-62
STEEL COWLING FORD/CU – AFTER S/N TB66J-04-000149 2-63
STEEL COWLING FORD/CU – AFTER MAY 2011 2-64
STEEL COWLING FORD/CU/GM/KU – AFTER APRIL 2015 2-65
PLATFORM INSTALLATION – PARKER ROTATOR 2-66
PLATFORM INSTALLATION – HELAC ROTATOR 2-67
PLATFORM INSTALLATION STEEL GRAVITY GATE – PARKER ROTATOR 2-68
PLATFORM INSTALLATION ALUMINUM GRAVITY GATE – PARKER ROTATOR 2-69
PLATFORM INSTALLATION ALUMINUM GRAVITY GATE CE – PARKER ROTATOR 2-70
PLATFORM ASSEMBLY ALUMINUM SWING GATE – PARKER ROTATOR 2-71
PLATFORM ASSEMBLY STEEL TRI-ENTRY, HELAC ROTATOR (1 OF 2) 2-72
PLATFORM ASSEMBLY STEEL TRI-ENTRY – HELAC ROTATOR (2 OF 2) 2-73
PLATFORM ROTATOR HELAC – BEFORE JUNE 22, 2013 2-74
PLATFORM ROTATOR PARKER – AFTER JUNE 21, 2013 2-75
LEGACY SNORKEL GUARD WIRING 2-76
SNORKEL GUARD ASSEMBLY 2-77

HYDRAULICS

HYDRAULIC OIL RESERVOIR – AFTER JULY 2006 3-1
DRIVE MOTOR 3-2
DRIVE MOTOR WITH INTEGRAL BRAKE 3-3
GEAR HUB HIGH TORQUE – AUBURN GEAR 3-4
DRIVE VALVE SUB-ASSEMBLY 3-5
DRIVE SEQUENCE VALVE – LEFT HAND 3-6

Courtesy of Crane.Market

DRIVE SEQUENCE VALVE – RIGHT HAND 3-7
SWING DRIVE ASSEMBLY 3-8
DRIVE/LIFT/SWING VALVE 3-9
DRIVE/LIFT/SWING CONTROL VALVE 3-10
MOTION CONTROL VALVE – DRIVE 3-11
MOTION CONTROL VALVE ROSS/CHAR-LYNN – TURNTABLE SWING 3-12
MOTION CONTROL VALVE FLUIDTECH – TURNTABLE SWING 3-13
PACKAGE VALVE NON-PROPORTIONAL 3-14
CONTROL VALVE ASSEMBLY NON-PROPORTIONAL – VICKERS 3-15
CONTROL VALVE ASSEMBLY NON-PROPORTIONAL – FLUIDTECH 3-16
NON-PROPORTIONAL CONTROL VALVE FLUIDTECH – AFTER JANUARY 2008 3-17
ACCUMULATOR 3-18
ANTI-CAVITATION VALVE – BEFORE AUGUST 2005 3-19
ANTI-CAVITATION VALVE – AFTER JULY 2005 3-20
ANTI-CAVITATION VALVE 3-21
SERIES/PARALLEL PACKAGE 4X4 – RIGHT HAND 3-22
SERIES/PARALLEL PACKAGE 4X4 – LEFT HAND 3-23
AC GENERATOR VALVE 3-24
CHECK VALVE 3-25
DUAL CROSSOVER RELIEF VALVE – SUN 3-26
DUMP VALVE 3-27
FLOW DIVIDER VALVE 3-28
FLOW DIVIDER VALVE SUB-ASSEMBLY 3-29
HYDRAULIC WARM-UP VALVE 3-30
SELECTOR VALVE 4X2 3-31
SELECTOR VALVE 4X4 3-32
SELECTOR VALVE – LEFT HAND 3-33
SELECTOR VALVE – RIGHT HAND 3-34
JIB/PLATFORM SELECTOR VALVE ASSEMBLY 3-35
PLATFORM/JIB SELECTOR VALVE 3-36
CENTERPOST AND FITTINGS – BEFORE MAY 1986 3-37
CENTERPOST AND FITTINGS – AFTER MAY 1986 3-38
LEVEL/STEERING CYLINDER – ROSENBOOM 3-39
LIFT CYLINDER ASSEMBLY 3-40
LIFT CYLINDER – GBI 3-41
LIFT CYLINDER – ROSENBOOM 3-42
EXTENSION CYLINDER – GBI 3-43
EXTENSION CYLINDER – ROSENBOOM 3-44
EXTENSION CYLINDER – SEABEE 3-45
JIB BOOM LIFT CYLINDER ASSEMBLY 3-46
JIB BOOM LIFT CYLINDER – ROSENBOOM 3-47
MASTER LEVEL CYLINDER – ROSENBOOM 3-48
MASTER LEVEL CYLINDER ROSENBOOM – S/N TB66J-04-000100 AND AFTER 3-49
MASTER LEVEL CYLINDER – ROSENBOOM (2) 3-50
SLAVE LEVEL CYLINDER ROSENBOOM – AFTER AUGUST 2000 3-51

Courtesy of Crane.Market

SLAVE LEVEL CYLINDER ASSEMBLY – S/N TB66J-04-000100 AND AFTER 3-52
SLAVE LEVEL CYLINDER ROSENBOOM – S/N TB66J-04-000100 AND AFTER 3-53
PLATFORM ROTATOR PARKER – BEFORE NOVEMBER 2014 3-54
HYDRAULIC PUMP 3-55
EMERGENCY POWER UNIT 3-56
CHASSIS HYDRAULIC EQUIPMENT 4X2 3-57
CHASSIS HYDRAULIC EQUIPMENT 4X4 3-58
TURNTABLE HYDRAULIC EQUIPMENT – BEFORE FEBRUARY 2007 3-59
TURNTABLE HYDRAULIC HOSES – BEFORE FEBRUARY 2007 3-60
TURNTABLE HYDRAULIC EQUIPMENT – AFTER JANUARY 2007 3-61

ELECTRICAL

BOOM SWITCH 4-1
TURNTABLE ELECTRICAL CUMMINS 3.3 – AFTER FEBRUARY 2008 4-2
TURNTABLE ELECTRICAL DEUTZ F4L-1011F – BEFORE JANUARY 2006 4-3
TURNTABLE ELECTRICAL DEUTZ F4L-1011F – AFTER NOVEMBER 2007, TURNTABLE ELECTRICAL CUMMINS 3.3 – BEFORE MARCH 2008 4-4
TURNTABLE ELECTRICAL DEUTZ F4L-1011F – AFTER FEBRUARY 2008 4-5
TURNTABLE ELECTRICAL – FORD LRG-425 4-6
TURNTABLE ELECTRICAL – KU 4-7
LOWER CONTROL PANEL – GM TIER 3 4-8
LOWER CONTROL PANEL 4-9
LOWER CONTROL PANEL KU – S/N TB66J-04-000100 AND AFTER 4-10
LOWER CONTROL PANEL KU -- CE 4-11
LOWER CONTROL PANEL CUMMINS 3.3 – BEFORE APRIL 2006 4-12
LOWER CONTROL PANEL CUMMINS 3.3 – AFTER NOVEMBER 2007 4-13
LOWER CONTROL PANEL DEUTZ F4L-1011F – BEFORE APRIL 2006 4-14
GROUND CONTROL PANEL – DEUTZ F4L-1011F 4-15
LOWER CONTROL PANEL – FORD LRG-425 4-16
WIRING BOX GM TIER 3 – BEFORE OCTOBER 2007 4-17
WIRING BOX PANEL – GM TIER 3 4-18
WIRING BOX KU – AFTER AUGUST 2014 4-19
WIRING BOX CE – KU 4-20
WIRING BOX PANEL – KU 4-21
WIRING BOX CUMMINS/DEUTZ ADDCO 3 SPEED – BEFORE AUGUST 2008 4-22
WIRING BOX CUMMINS/DEUTZ ADDCO 3 SPEED – AFTER JULY 2008 4-23
PANEL SUBASSEMBLY – AFTER JULY 2008 4-24
BOOM INSTALLATION – AFTER JUNE 2008 4-25
BOOM INSTALLATION CE – AFTER JUNE 2014 4-26
PANEL SUBASSEMBLY – BEFORE AUGUST 2008 4-27
WIRING BOX – FORD LRG-425 4-28
WIRING BOX PANEL – FORD LRG-425 4-29
BOOM INSTALLATION CE – KU 4-30
BOOM INSTALLATION – BEFORE JULY 2008 4-31
BOOM INSTALLATION – AFTER JUNE 2008 4-32

Courtesy of Crane.Market

PLATFORM FOOT SWITCH 4-33
UPPER CONTROL BOX – BEFORE OCTOBER 2007 4-34
UPPER CONTROL BOX – AFTER FEBRUARY 2008 4-35
UPPER CONTROL BOX – AFTER OCTOBER 2008 4-36
UPPER CONTROL BOX HYDRAFORCE – AFTER MARCH 2008 4-37
UPPER CONTROL BOX KU – S/N TB66J-04-000100 AND AFTER 4-38
UPPER CONTROL BOX CE – KU 4-39
CONTROLLER – DRIVE/STEER 4-40
CONTROLLER – LIFT/SWING 4-41
110V POWER OUTLET INSTALLATION 4-42

OPTIONS

DUAL FUEL GM TIER 2 – BEFORE SEPTEMBER 2007 5-1
DUAL FUEL GM TIER 3 – AFTER AUGUST 2007 5-2
GAS ONLY GM TIER 3 – AFTER AUGUST 2007 5-3
LP ONLY GM TIER 3 – AFTER AUGUST 2007 5-4
DUAL FUEL – FORD LRG-425 5-5
LP FUEL ONLY – FORD LRG-425 5-6
DUAL FUEL ENGINE SUB-ASSEMBLY – FORD LRG 425 5-7
SPARK ARRESTOR MUFFLER – DEUTZ 5-8
AIR INLET HEATER – DEUTZ 5-9
COLD WEATHER PACKAGE – GM 5-10
EXTREME COLD WEATHER PACKAGE – GM 5-11
EXTREME COLD WEATHER PACKAGE – KUBOTA 5-12
HYDRAULIC WARM-UP 5-13
HYDRAULIC WARM-UP VALVE 5-14
MOTION ALARM – ALL MOTION 5-15
MOTION ALARM – DRIVE 5-16
DRIVING AND TAIL LIGHTS – BEFORE JULY 2010 5-17
DRIVING AND TAIL LIGHTS – AFTER JUNE 2010 5-18
WARNING LIGHTS 5-19
PLATFORM WORK LIGHTS 5-20
TILT ALARM LIGHT 5-21
UPPER CONTROL COURTESY LIGHT 5-22
SANDBLAST KIT 5-23
TOW PACKAGE 5-24
HORN 5-25
UPPER CONTROL BOX COVER 5-26
AIRLINE TO PLATFORM 5-27
PLATFORM BUMPGUARD – BEFORE JUNE 2013 5-28
PLATFORM BUMPGUARD – AFTER MAY 2013 5-29
LANYARD MOUNT – 1430080 PLATFORM ONLY 5-30
PERSONAL FALL ARREST SYSTEM 5-31
CSA PACKAGE 5-32
PLATFORM GLAZIER PACKAGE 5-33

Courtesy of Crane.Market

GLAZIER TRAY ASSEMBLY 5-34
110V AC GENERATOR MOUNTING – BEFORE OCTOBER 2006 5-35
110V AC GENERATOR MOUNTING – AFTER SEPTEMBER 2006 5-36
110V AC GENERATOR MOUNTING – AFTER APRIL 2014 5-37
110V AC GENERATOR – BEFORE OCTOBER 2006 5-38
110V AC GENERATOR MOUNTING – AFTER SEPTEMBER 2006 5-39
PLATFORM WELDER – STEEL PLATFORM 5-40
PLATFORM WELDER – ALUMINUM PLATFORM 5-41
WELDER ASSEMBLY 5-42
ISOLATION VALVE 5-43
12 KW GENERATOR INSTALLATION 5-44
12 KW GENERATOR ASSEMBLY – FABCO 5-45
12 KW GENERATOR ASSEMBLY – TENDAIRE 5-46
12 KW GENERATOR VALVE ASSEMBLY 5-47
12 KW GENERATOR WIRING BOX ASSEMBLY 5-48
12 KW GENERATOR CIRCUIT BREAKER WIRING 5-49
12 KW GENERATOR BOOM ELECTRICAL INSTALLATION 5-50
12 KW GENERATOR PLATFORM CONTROL BOX 5-51
12 KW GENERATOR HOSE CARRIER ASSEMBLY 5-52
12 kW GENERATOR HOSE/CABLE CLAMP INSTALLATION 5-53

MAINTENANCE

TB66 MAINTENANCE 6-1

SCHEMATICS

TB66 ELECTRICAL SCHEMATICS 7-1
TB66J HYDRAULIC SCHEMATICS 7-2
Appendix A:Pages Index ..... A
Appendix B:Parts Index ..... B

Courtesy of Crane.Market

snorkel

TB66J



CE

REPAIR PARTS MANUAL

Manufactured 02-01 and after

Models TB66J/TB66JRT
Replaces 0083734 March 2014

Part Number 0083734
September 2015

Courtesy of Crane.Market

DANGER

The aerial platform is not electrically insulated. Death or serious injury will result from contact with, or inadequate clearance from, an energized conductor.

Do not go closer than the Minimum Safe Approach Distance as defined by ANSI standards.

Regard all conductors as energized.

Allow for electrical wire sag and aerial platform sway.

If the platform, boom structure, or any part of the aerial platform contacts a high-voltage electrical conductor, the entire machine can become electrically charged.

If that happens, remain on the machine and do not contact any other structure or object. This includes the ground, adjacent buildings, poles, and any other objects that are not part of the aerial platform.

Such contact could make your body a conductor to the other object, creating an electrical shock hazard resulting in death or serious injury.

If an aerial platform is in contact with an energized conductor the platform operator must warn ground personnel in the vicinity to stay away. Their bodies can conduct electricity creating an electrical shock hazard resulting in death or serious injury.

Do not approach or leave the aerial platform until the electricity has been turned off.

Do not attempt to operate the lower controls when the platform, boom structure, or any part of the aerial platform is in contact with a high-voltage electrical conductor or if there is an immediate danger of such contact.

Personnel on or near an aerial platform must be continuously aware of electrical hazards, recognizing that death or serious injury can result from contact with an energized conductor.

California

Proposition 65 Warning

Battery posts, terminals and related accessories contain lead and lead components, chemicals known to the State of California to cause cancer and birth defects or other reproductive harm. Wash hands after handling.

California

Proposition 65 Warning

Diesel and gasoline engine exhaust and some of its constituents are known by the State of California to cause cancer, birth defects or other reproductive harm.

© Snorkel International, Inc. – all rights reserved

Printed in the U.S.A.

Courtesy of Crane.Market

General Information

About This Manual

This manual covers TB66J and TB66JRT aerial platform. Information is included for machines that have been manufactured to conform to all applicable requirements of the following organizations:

- American National Standards Institute (ANSI)
- Canadian Standards Association (CSA)
- European Committee for Standardization (CE)
- Australian Standards (AS) certification

Part pages include a drawing and a bill of material. The bill of material lists the item number that is on the drawing, the Snorkel part number, quantity used and a description of the item.

Some callouts in the drawings may have a balloon with two numbers. The top number is the item number and the bottom number is the quantity of the item at that location.

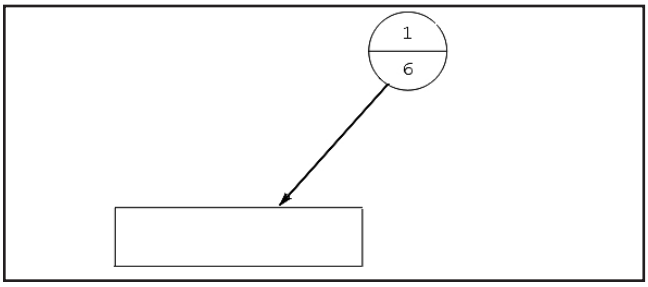

While Snorkel has attempted in every way to confirm that all information in this manual is correct, improvements are being constantly made to the machine that may not be reflected in this manual.

If you find information in this manual that is not correct or is confusing, you are urged to report your findings to Snorkel for our evaluation. Your input is important to us and will be used in future printings of this manual.

This machine is covered by a limited warranty that specifically identifies items warrantied by Snorkel and those items covered by original manufacturer's warranty. A copy of the Snorkel Limited Warranty is located on the inside of the back cover of this manual.

Repairs and Maintenance

Every person who maintains, inspects, tests or repairs the machine must be qualified and authorized to do so.

⚠Caution

Do not modify this aerial platform without prior written consent of Snorkel Engineering Department. Modification may void the warranty, adversely affect stability or affect the operational characteristics of the aerial platform.

Abbreviations

The following abbreviations may be used in this manual.

AC	alternating current
ANSI	American National Standards Institute
AR	as required
CCA	cold cranking amps
cm	centimeter
DC	direct current
ft	feet
GFCI	ground fault circuit interruptor
in	inch
lbs	pounds
mm	millimeter
no	number
NPT	national pipe thread
psi	pounds per square inch
qty	quantity
rpm	revolutions per minute
UL	Underwriters Laboratories Inc.

Additional Information

All correspondence relative to this machine, such as field reports, discrepancy reports, requests for information, etc., should be directed to:

Snorkel North America
P.O. Box 1160
St. Joseph, MO 64502-1160 USA
Phone: 1-800-255-0317

Snorkel Europe
Vigo Centre
Birtley Road
Washington
Tyne & Wear
NE38 9DA
Phone: +44 (0) 845 1550 058

http://www.snorkellifts.com

Courtesy of Crane.Market

Component Identification

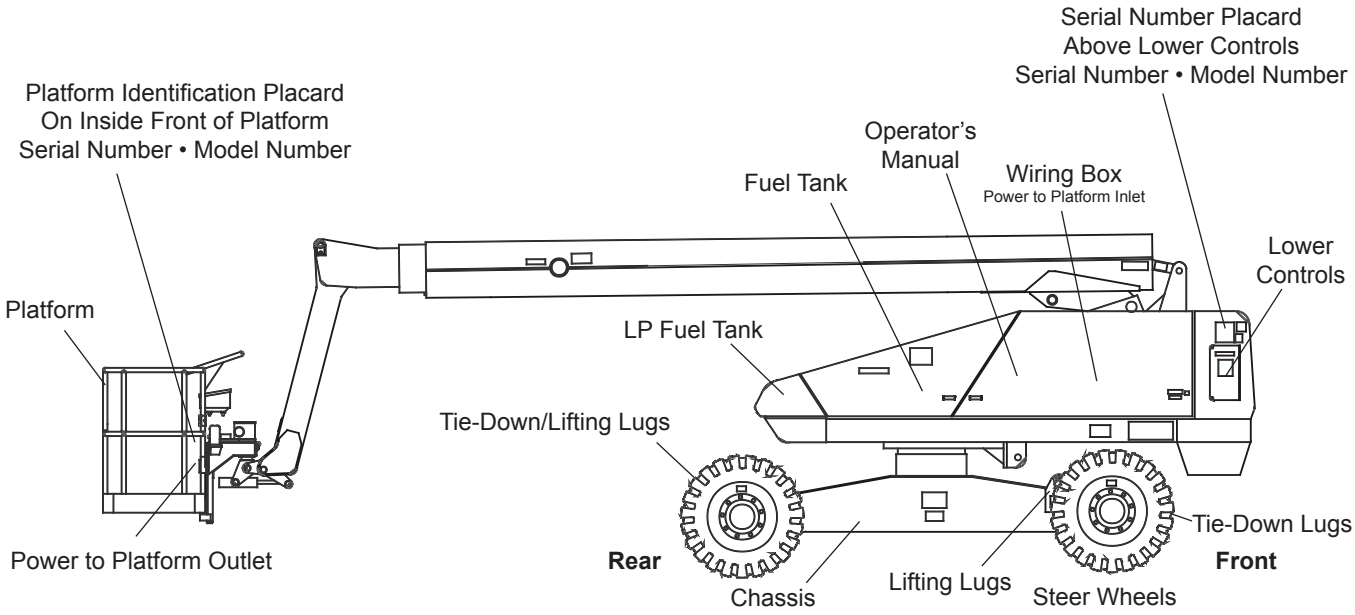

Right Side

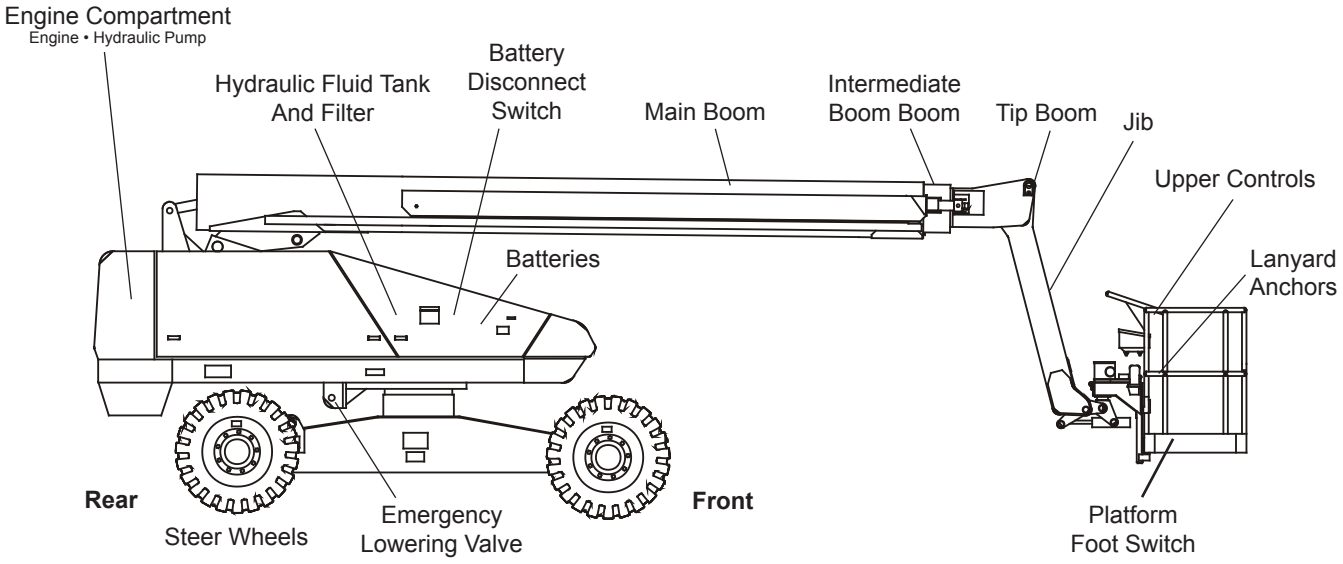

Left Side

Courtesy of Crane.Market

Service and Parts Information

Ordering Parts

When placing an order for service or repair parts, please have the following machine information readily available.

- Model number
- Serial number
- Snorkel part number
- Description of part
- Quantity of parts required
- Your purchase order number
- Address for order to ship to
- The desired shipment method

The parts order form on the following page may be mailed or faxed to the attention of the Parts Department at the following location:

Snorkel North America
P.O. Box 1160
St. Joseph, MO 64502-1160 USA
Phone: 1-800-255-0317
Parts Fax: 1-785-989-3077

Snorkel Europe
Vigo Centre
Birtley Road
Washington
Tyne & Wear
NE38 9DA
Phone: +44 (0) 845 1550 058
Parts Fax: +44 (0) 1952 607 678

Attention: Parts Department

For your convenience, our electronic on-line ordering system is available at the following Internet location:

http://www.snorkellifts.com

ANSI and OSHA Compliance

All owners and users of the aerial platform must read, understand and comply with all applicable regulations. Ultimate compliance to OSHA regulations is the responsibility of the user and their employer.

ANSI publications clearly identify the responsibilities of all personnel who may be involved with the aerial platform. A reprint of the “Manual of Responsibilities for Dealers, Owners, Users, Operators, Lessors and Lessees of ANSI/SIA A92.5-2006 Boom-Supported Elevating Work Platforms” is available from Snorkel dealers or from the factory upon request.

Copies are also available from:

Scaffold Industry Association, Inc.
P.O. Box 20574
Phoenix, AZ 85036-0574 USA

Manuals

Manuals are available from Snorkel to support any of the machines that we produce.

The specific manuals for TB66J aerial platforms are as follows:

TB66J Operator’s Manual – ANSI
Snorkel part number – 0083740

TB66J Operator’s Manual – CE
Snorkel part number – 0084221

TB66J/TB66JRT Repair Parts Manual
Snorkel part number – 0083734

ANSI Manual of Respobsibilities
ANSI/SIA A92.5-2006
Snorkel part number – 0084053

Machine Information

Model Number: _____

Serial Number: _____

Date of Purchase: _____

Purchased From: _____

Snorkel Dealer or Distributor: _____

Courtesy of Crane.Market

Courtesy of Crane.Market

REPAIR PARTS

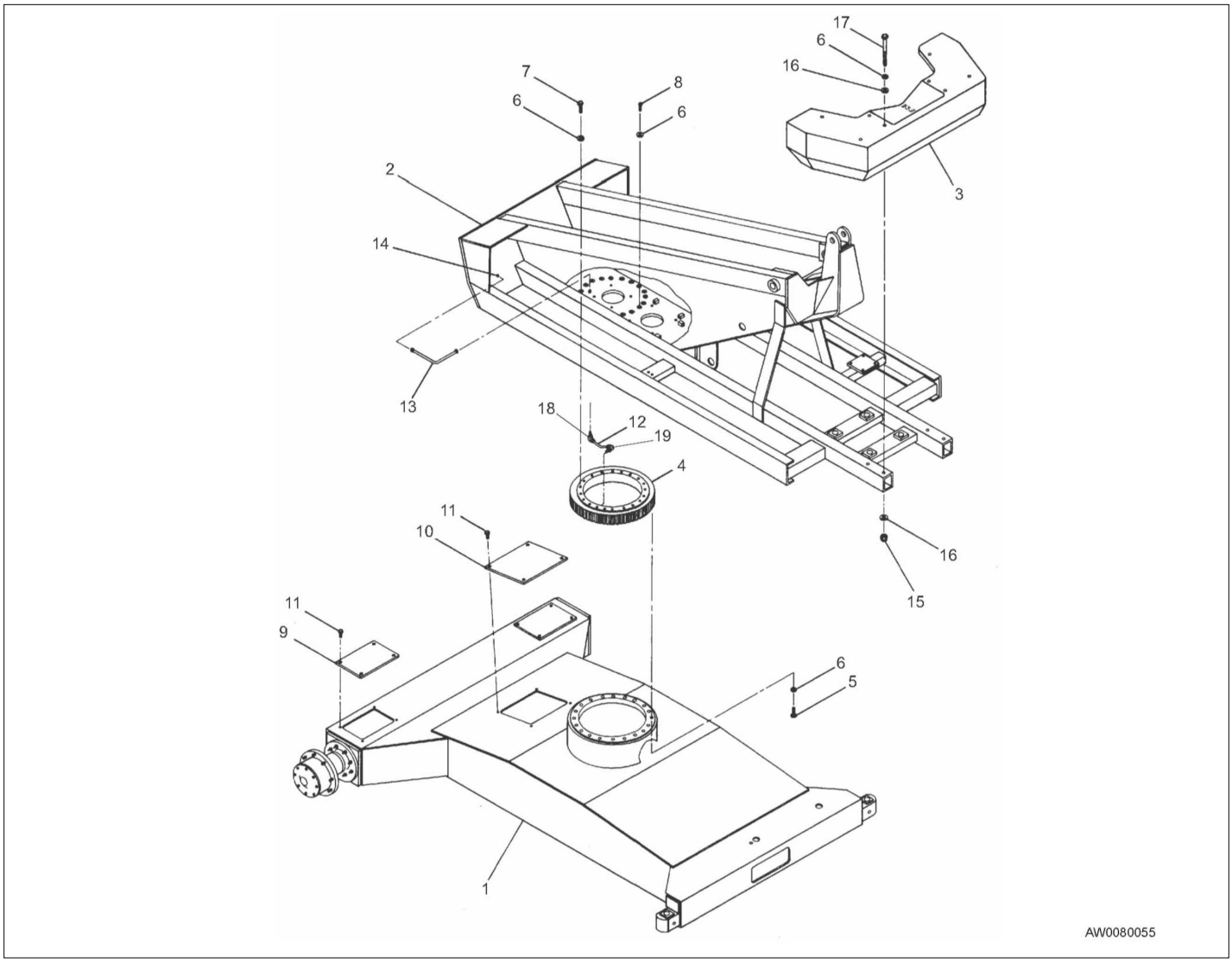

Courtesy of Crane.Market

Item	Part No.	Name	Qty	Uom
1	PNNA	CHASSIS - (CONSULT FACTORY)	1	EA
2	PNNA	TURNTABLE - (CONSULT FACTORY)	1	EA
3	PNNA	COUNTERWEIGHT - (CONSULT FACTORY)	1	EA
4	0070021	SLEWING RING	1	EA
5	5560149	CAPSCREW SPECIAL 5/8-11 SELF LOCKING	20	EA
6	5560169	WSHR HARD FLAT .625 SP	44	EA
7	5560052	CAPSCREW SPECIAL 5/8-11 SELF LOCKING	18	EA
8	5560063	BLT SKTHD .625-11 1.25 HEX SP	2	EA
9	0070024	ACCESS COVER, DRIVE	2	EA
10	0070328	ACCESS COVER, CHASSIS	1	EA
11	970449	CAPSCREW 3/8-16 X 3/4 INCH LONG HEX HEAD GRADE 5	2	EA
12	0070553	LUBRICATION TUBE, 1/4 INCH COPPER TUBE	1	EA
13	0020655	HOSE -4-4S-4S 29.5 100R1	1	EA
14	5570001	GREASE FITTING .125-24NPR STR	1	EA
15	5560036	NUT 5/8-11 SELF LOCKING	4	EA
16	987159	WASHER 5/8 MEDIUM LOCK	8	EA
17	971379	BLT HEXHD .625-11 X 3.75 SP GR8 ZP	4	EA
18	5033704	ADAPTER 90 DEG ELBOW 1/4 NPTF TO -4 JIC	1	EA
19	5033703	ADAPTER 90 DEG ELBOW 1/2 NPTF TO -4 JIC	1	EA

Courtesy of Crane.Market

REPAIR PARTS

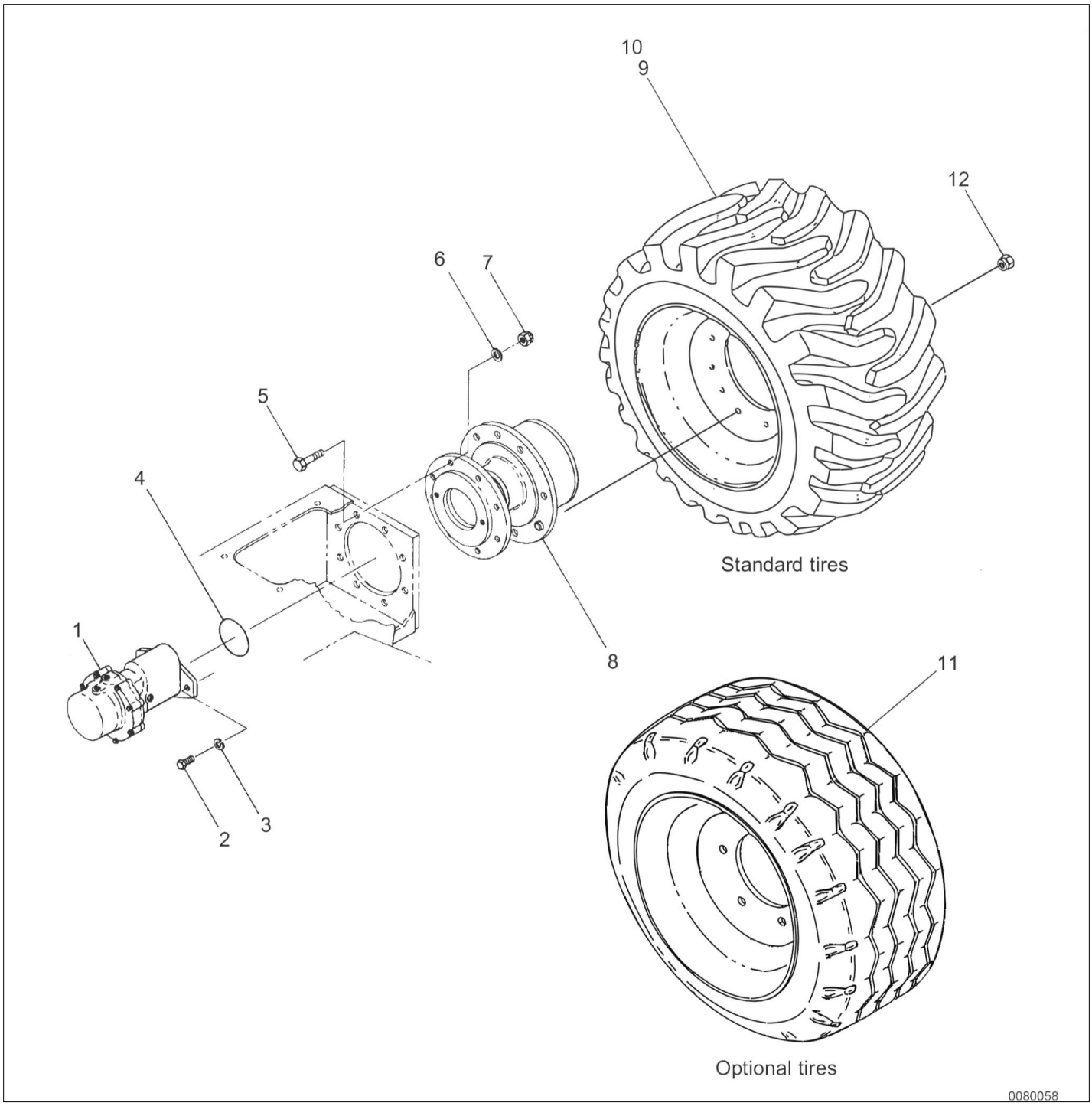

Courtesy of Crane.Market

Item	Part No.	Name	Qty	Uom
1	6030040	MTR W/BRAKE	2	EA
2	5560078	BLT .50-13 X 2.50 HHCS GR8	4	EA
3	987139	WASHER LOCK .500	4	EA
4	7110242	O-RING 4.00ID 4.25OD .125 70D AS568 -242-70	2	EA
5	5560642	CAPSCREW 5/8-11 X 3-1/4 INCH LONG HEX HEAD GRADE 5	16	EA
6	5560169	WSHR HARD FLAT .625 SP	16	EA
7	5560131	NUT .625-11 ESNA HIGH STRENGTH	16	EA
8	0081674	GEAR HUB, HIGH TORQUE	2	EA
9	0080965	TIRE AND WHEEL, FOAM FILLED RIGHT HAND 15-19.5 12 PLY LUG	1	EA
10	0080966	TIRE AND WHEEL, FOAM FILLED LEFT HAND 15-19.5 12 PLY LUG	1	EA
11	0081462	TIRE AND WHEEL, FOAM FILLED 15-19.5 14 PLY HIGHWAY	2	EA
12	7280001	LUG NUT	16	EA

Courtesy of Crane.Market

REPAIR PARTS

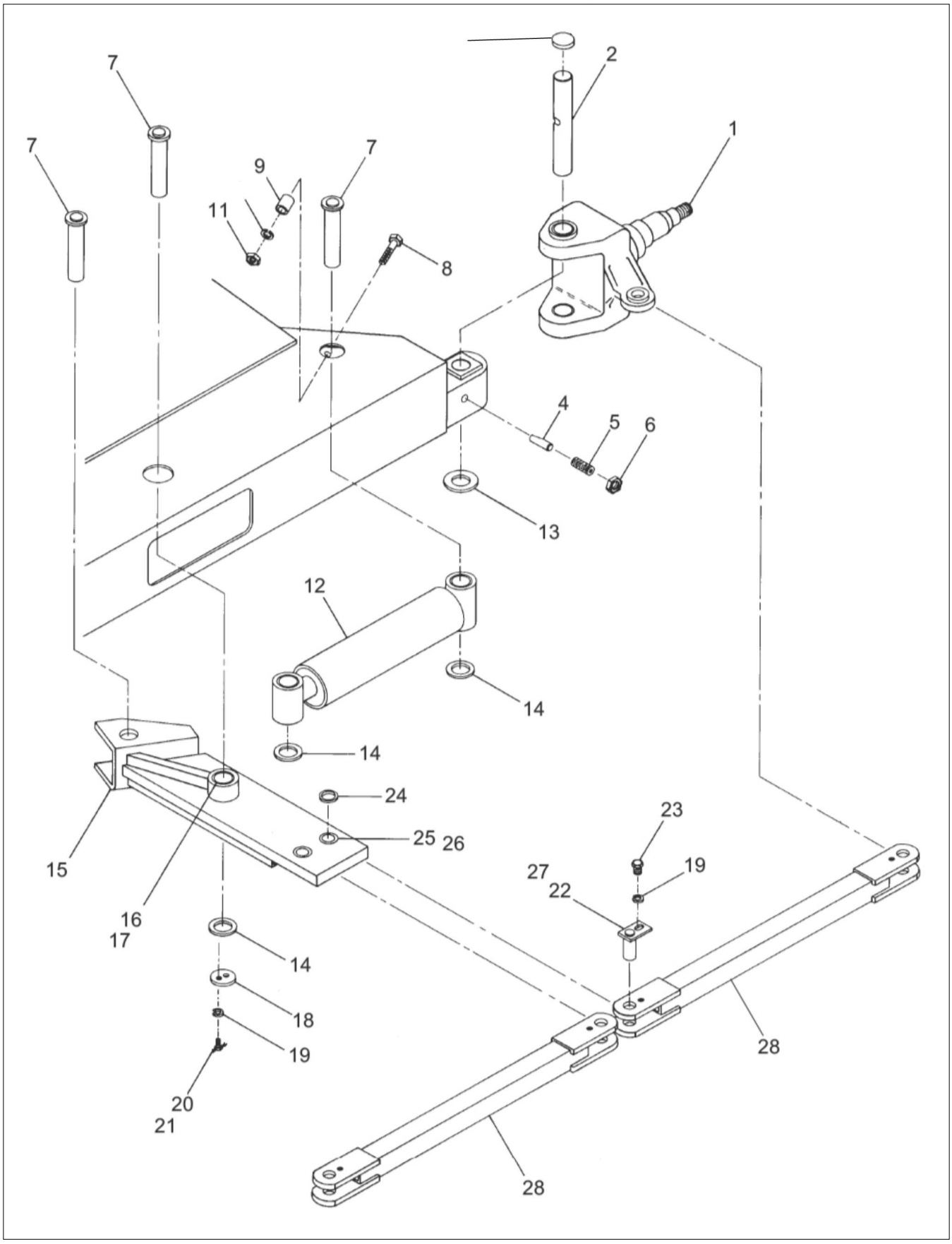

Courtesy of Crane.Market

Item	Part No.	Name	Qty	Uom
1	0080063	STEER YOKE AND WHEEL	1	EA
2	0080182	KING PIN	2	EA
3	0080184	KING PIN CAP	2	EA
4	0080183	LOCKING PIN	2	EA
5	5569836	SET SCREW 3/4-10 X 1-3/4 INCH LONG HEX SOCKET HEAD	2	EA
6	984469	NUT, 3/4-10 HEX JAM	2	EA
7	0070442	WLDMT PIN 1.50 5.875 GRIP	3	EA
8	970949	CAPSCREW 1/2-13 X 2-1/2 INCH LONG HEX HEAD GRADE 5	1	EA
9	0080098	SPACER	1	EA
10	987139	WASHER LOCK .500	1	EA
11	984149	NUT 1/2-13 HEX	1	EA
12	0074799	CYL 3.50 9.50 1.75 LEVEL/STEER	1	EA
13	2580001	THRUST BEARING	2	EA
14	5560252	MACHINE BUSHING 2-1/4 INCH OD X 1-1/4 INCH ID X 14 GAUGE THICK	3	EA
15	0083562	STEERING ARM	1	EA
16	0080187	SPACER, STEERING ARM	1	EA
17	2502416	BEARING	2	EA
18	0070033	PIN LOCK	2	EA
19	987109	WASHER LOCK .313	8	EA
20	0070473	CAPSCREW 5/16-18 DRILLED HEAD	4	EA
21	9980012	.040 INCH DIAMETER STAINLESS STEEL SAFETY LOCKWIRE -(SOLD IN ONE POUND CAN)	1	EA
22	0071494	PIN, STEERING ARM	4	EA
23	970239	BOLT HEXHD .313-18 .75 GR. 5	4	EA
24	0080348	SPACER TIE ROD MOUNTING	4	EA

Courtesy of Crane.Market

Item	Part No.	Name	Qty	Uom
25	2690001	BEARING, SELF ALIGNING	2	EA
26	5570002	GREASE FITTING 1/8 NPT 45°	2	EA
27	5570003	GREASE FITTING 1/8 NPT 90°	2	EA
28	0083416	TIE ROD	2	EA

Courtesy of Crane.Market

REPAIR PARTS

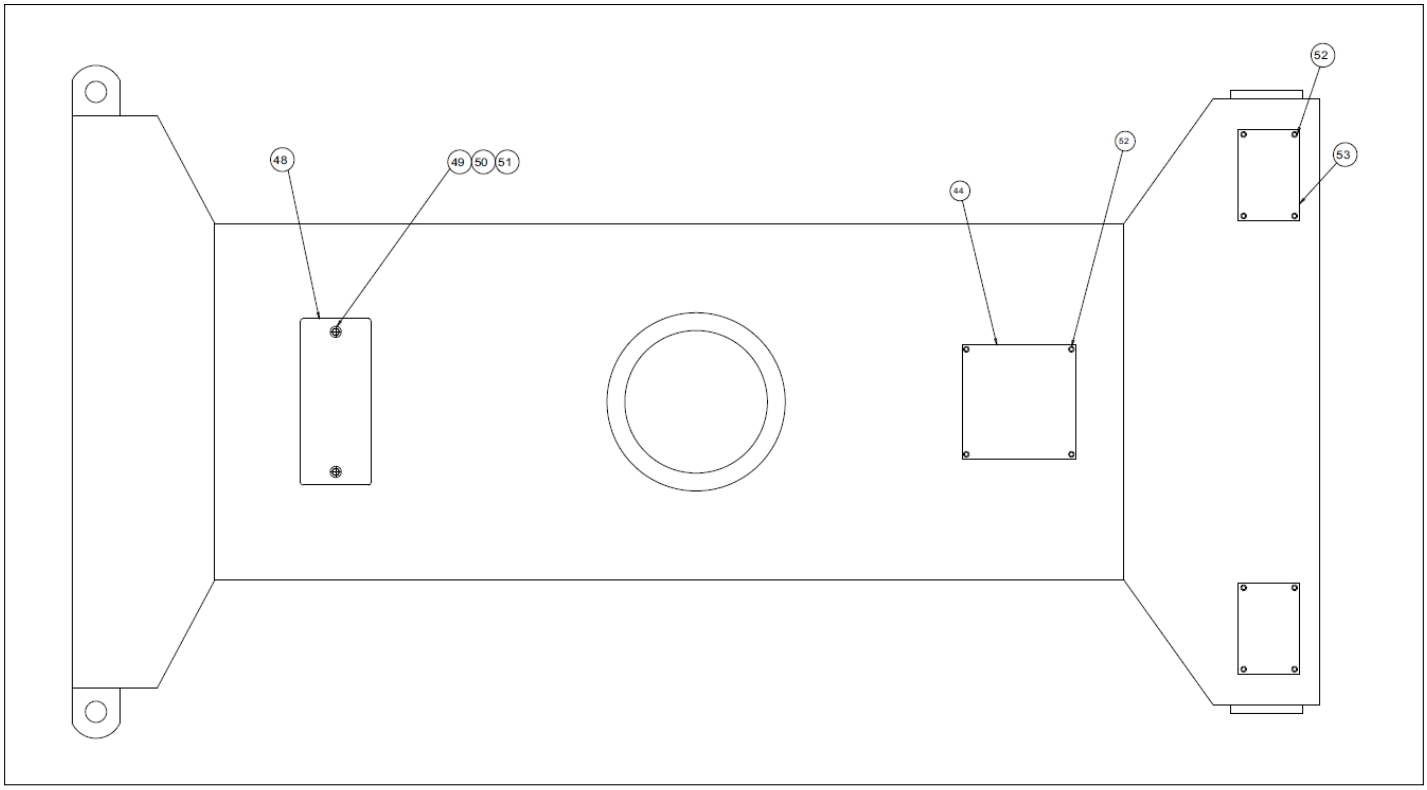

Courtesy of Crane.Market

Item	Part No.	Name	Qty	Uom
1	0083416	TIE ROD	2	EA
2	0083562	STEERING ARM	1	EA
3	2690001	BEARING, SELF ALIGNING	4	EA
4	0110320	PIN WELDMENT	4	EA
5	970239	BOLT HEXHD .313-18 .75 GR. 5	4	EA
6	9877109	WASHER LOCK .312 MDM	8	EA
7	0080348	SPACER TIE ROD MOUNTING	4	EA
8	0070442	WLDMT PIN 1.50 5.875 GRIP	3	EA
9	0070033	PIN LOCK	25	EA
10	0070473	CAPSCREW 5/16-18 DRILLED HEAD	4	EA
11	9980012	.040 INCH DIAMETER STAINLESS STEEL SAFETY LOCKWIRE -(SOLD IN ONE POUND CAN)	1	EA
12	5560688	BSHG MCHRY 1.50ID 2.25OD 14GA	1	EA
13	2502432	BEARING, 1-1/2 BORE X 2 LG	2	EA
14	0074799	CYL 3.50 9.50 1.75 LEVEL/STEER	1	EA
15	5065707	STRAIGHT THREAD ADAPTER - (CENTERPOST PORTS NO 5 AND NO 6) (FITTINGS NOT SHOWN, PORTS MARKED ON PARTS)	2	EA
16	0080098	SPACER	1	EA
17	970979	HD BOLT .500-13 X 2.5 GR5	1	EA
18	987139	WASHER LOCK .500	1	EA
19	984149	NUT 1/2-13 HEX	1	EA
20	0081023	HUB SUB-ASSY	2	EA
21	0080182	KING PIN	2	EA
22	5569836	SET SCREW 3/4-10 X 1-3/4 INCH LONG HEX SOCKET HEAD	2	EA
23	984469	NUT, 3/4-10 HEX JAM	2	EA

Courtesy of Crane.Market

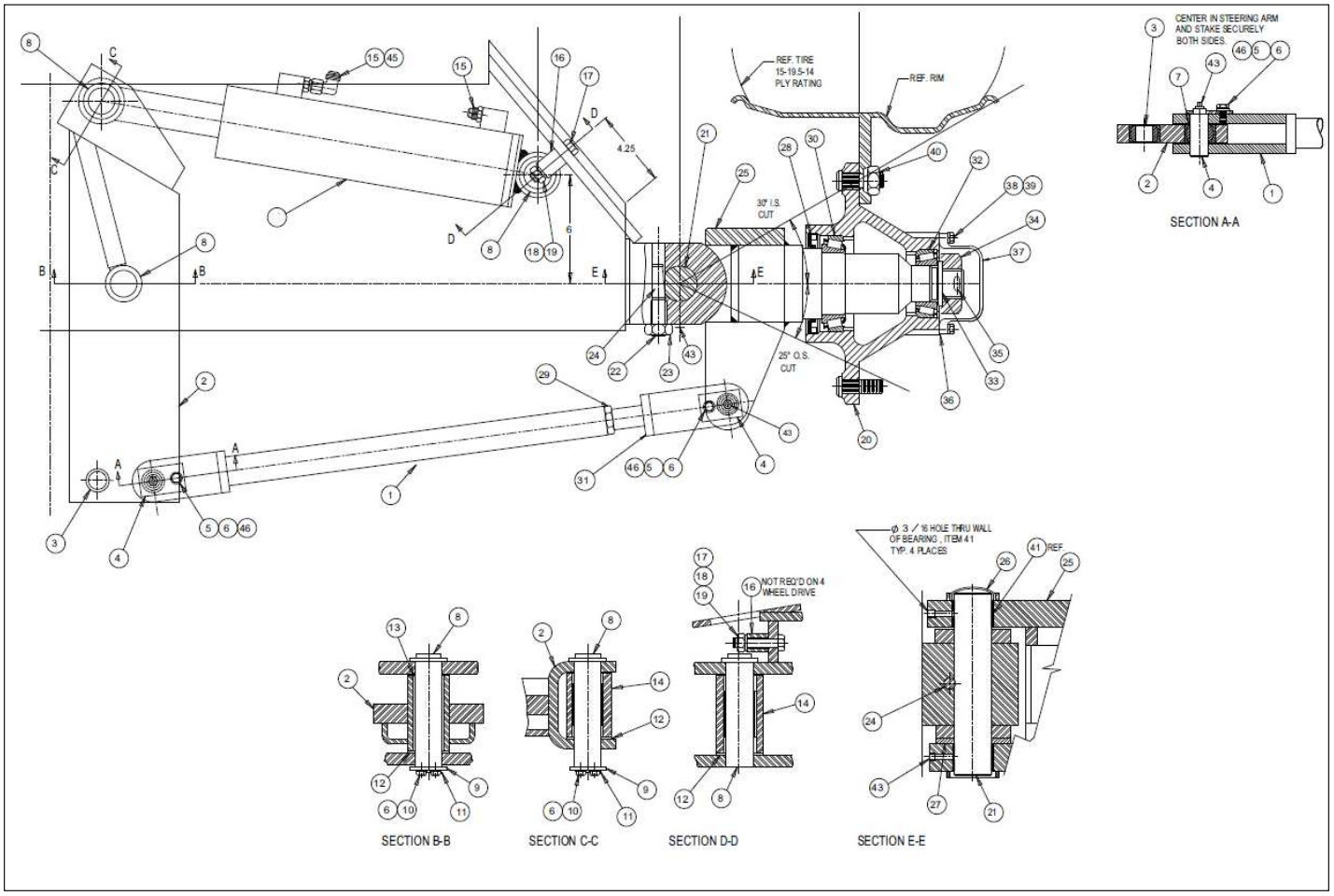

Courtesy of Crane.Market

Item	Part No.	Name	Qty	Uom
24	0080183	LOCKING PIN	2	EA
25	0083571	WELDMENT STEERING YOKE	2	EA
26	5070026	CAP WHEEL SERVICE-	2	EA
27	2580001	THRUST BEARING	2	EA
28	7150003	GREASE SEAL	2	EA
29	5560202	NUT JAM GR 8	1	EA
30	2560006	INNER BEARING CONE	2	EA
31	0083418	WELDMENT, TIE ROD END	2	EA
32	2560005	BEARING CONE	2	EA
33	5560025	SCR TRHD 10-24 .75 GR5	2	EA
34	5560026	SPINDLE NUT	2	EA
35	556061	COTTER PIN, 3/8 DIA X 2-1/2 LG	2	EA
36	0080185	GASKET, HUB CAP	2	EA
37	0080186	HUB CAP	2	EA
38	970059	CAPSCREW 1/4-20 X 1-1/2 INCH LONG HEX HEAD GRADE 5	8	EA
39	9870099	WASHER LOCK .250 MDM	8	EA
40	7280010	WHEEL NUT (STANDARD ON 4X4, FOAM FILLED LUGGED TIRES)	REF	EA
41	2503224	BRG 2.00ID 2.19OD 1.50	REF	EA
43	5570001	GREASE FITTING .125-24NPR STR	8	EA
44	0070328	ACCESS COVER, CHASSIS	1	EA
45	5037005	FTG ELB90SWVL-6S-6S STL	1	EA
46	986269	WASHER 5/16 MEDIUM FLAT	4	EA
48	0082282	COVER, CHASSIS - 4 WHEEL DRIVE	1	EA
49	970889	CAPSCREW 1/2-13 X 1 INCH LONG HEX HEAD GRADE 5	2	EA
50	986359	WASHER 1/2 MEDIUM FLAT	2	EA
51	5560039	NUT LKG .500-13	2	EA

Courtesy of Crane.Market

Item	Part No.	Name	Qty	Uom
52	5560215	CAPSCREW 3/8-16 X 3/4 INCH LONG DRILLED HEAD	12	EA
53	0070224	ACCESS COVER, DRIVE	2	EA

Courtesy of Crane.Market

REPAIR PARTS

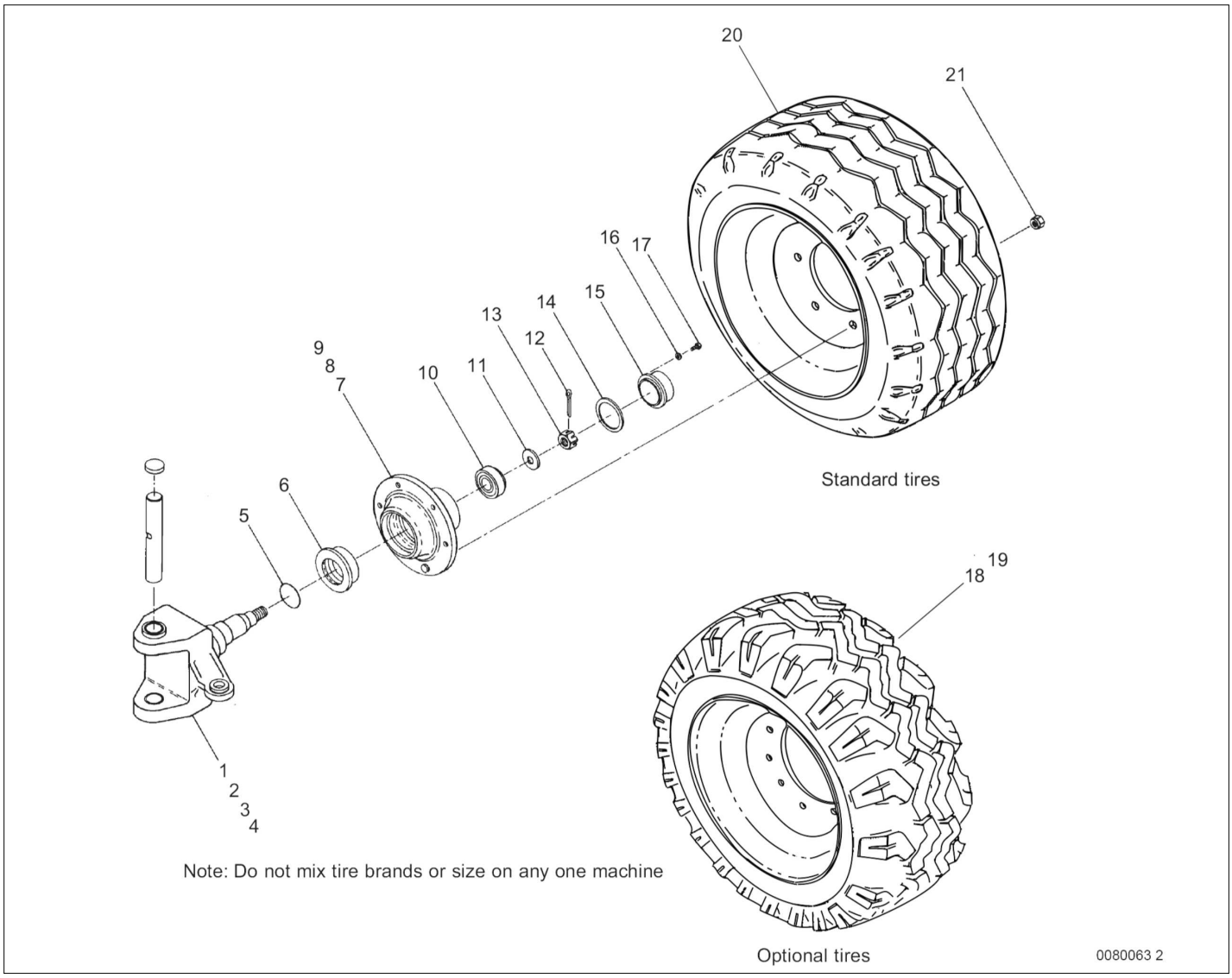

Courtesy of Crane.Market

Item	Part No.	Name	Qty	Uom
1	0080349	STEERING YOKE, 2 WHEEL DRIVE	1	EA
2	2690001	BEARING, SELF ALIGNING	2	EA
3	2503224	BRG 2.00ID 2.19OD 1.50	4	EA
4	5570001	GREASE FITTING .125-24NPR STR	4	EA
5	7150001	GREASE SEAL	2	EA
6	2560006	INNER BEARING CONE	2	EA
7	0080181	HUB	2	EA
7	280024	REPLACEMENT WHEEL BOLT	20	EA
8	2540005	BEARING CUP	2	EA
9	2540006	OUTER BEARING CUP	2	EA
10	2560005	BEARING CONE	2	EA
11	5560025	SCR TRHD 10-24 .75 GR5	2	EA
12	5560661	COTTER PIN 3/8 INCH DIAMETER X 2-1/2 INCH LONG	2	EA
13	5560026	SPINDLE NUT	2	EA
14	0080185	GASKET, HUB CAP	2	EA
15	0080186	HUB CAP	2	EA
16	987099	WASHER LOCK .250	8	EA
17	970009	BLT HEXHD .250-20 .500 GR5-	8	EA
18	0080365	TIRE AND WHEEL, FOAM FILLED RIGHT HAND 15-19.5 14 PLY STEER (STANDARD ON 4X2, FOAM FILLED LUGGED TIRES)	1	EA
19	0082185	TIRE AND WHEEL, FOAM FILLED LEFT HAND 15-19.5 14 PLY STEER (STANDARD ON 4X2, FOAM FILLED LUGGED TIRES)	1	EA
20	0082205	TIRE AND WHEEL, FOAM FILLED 15-19.5 14 PLY HIGHWAY TREAD (OPTIONAL ON 4X2, FOAM FILLED NON-LUGGED TIRES)	2	EA

Courtesy of Crane.Market

Item	Part No.	Name	Qty	Uom
21	7280010	WHEEL NUT (STANDARD ON 4X4, FOAM FILLED LUGGED TIRES)	20	EA

Courtesy of Crane.Market

REPAIR PARTS

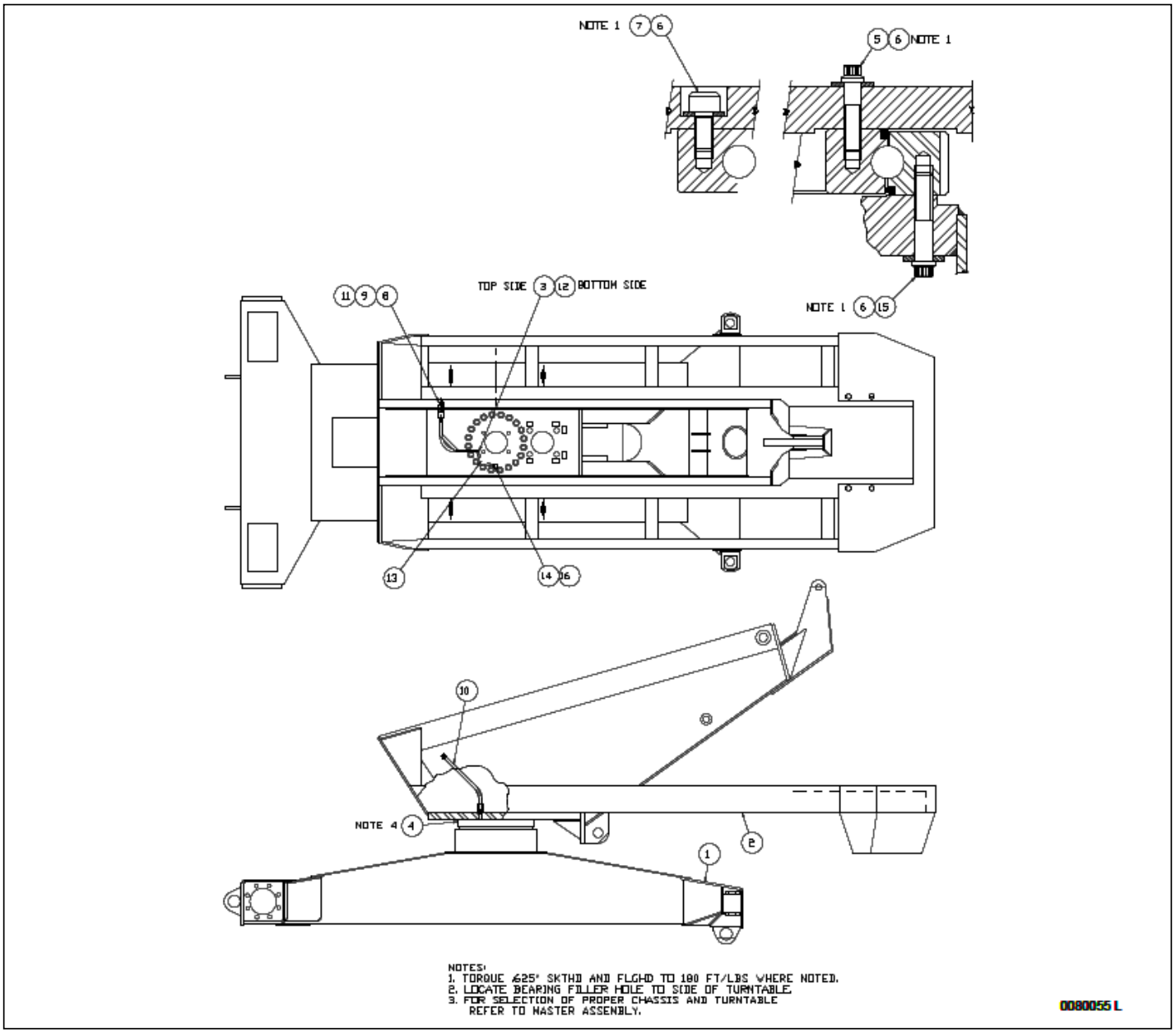

Courtesy of Crane.Market

Item	Part No.	Name	Qty	Uom
1	0080303	CHASSIS WELDMENT	1	EA
2	PNNA	TURNTABLE WELDMENT	REF	EA
3	5033604	ADAPTER STRAIGHT 1/4 NPTF TO -4 JIC	REF	EA
4	0070021	SLEWING RING	1	EA
5	5560204	HHCS, .625-11 UNC, STL, GR 8, 2.25 LG.	18	EA
6	5560169	WSHR HARD FLAT .625 SP	40	EA
7	5560063	BLT SKTHD .625-11 1.25 HEX SP	2	EA
8	5037102	BULKHEAD CONNECTOR	1	EA
9	5074401	FTG LKNT BDH-4 STL	1	EA
10	0020655	HOSE -4-4S-4S 29.5 100R1	1	EA
11	5570001	GREASE FITTING .125-24NPR STR	1	EA
12	5033704	ADAPTER 90 DEG ELBOW 1/4 NPTF TO -4 JIC	1	EA
13	0070768	HOSE-4-4S-4S 18.5 100R1	1	EA
14	5033703	ADAPTER 90 DEG ELBOW 1/2 NPTF TO -4 JIC	1	EA
15	5563062	BLT FLGH .625-11 2.75 12PT SP	20	EA
16	5036903	SWIVEL NUT 45° ELBOW	1	EA

Courtesy of Crane.Market

REPAIR PARTS

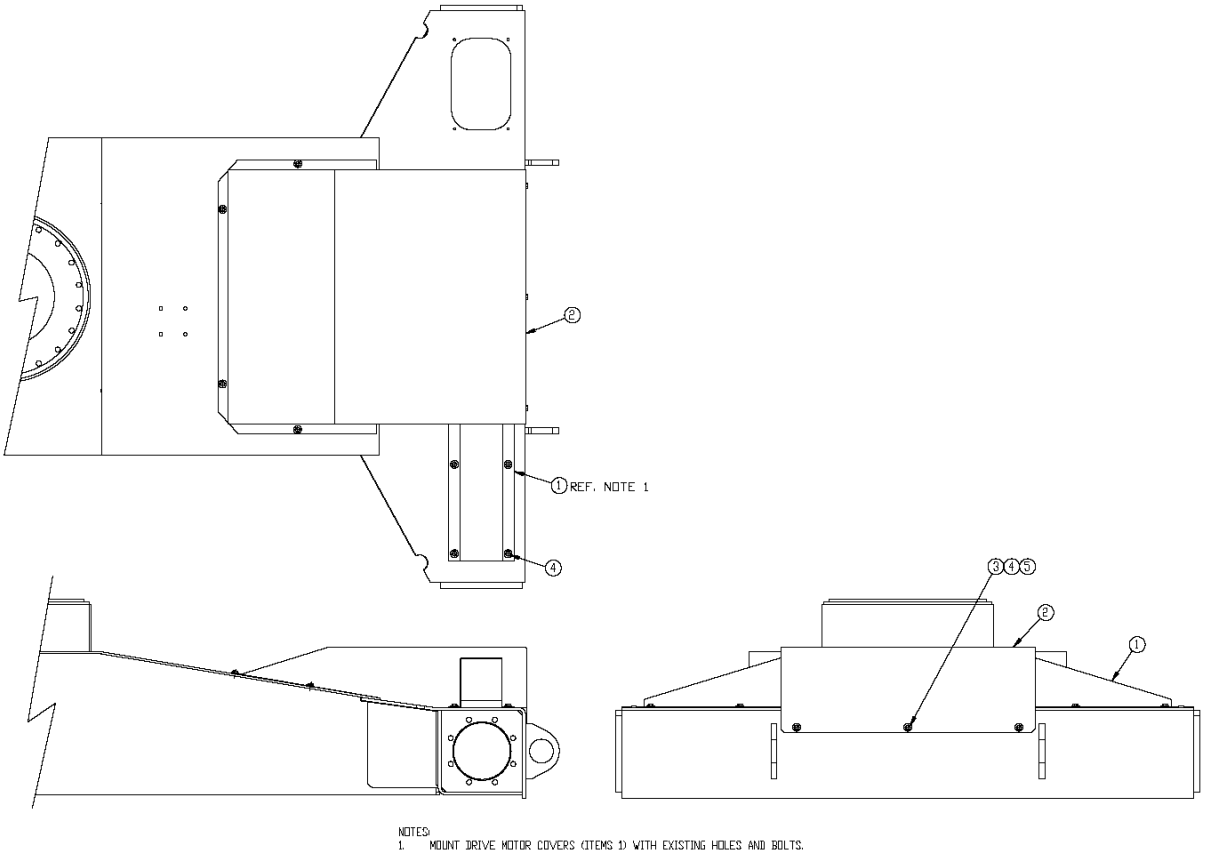

NOTES:
1. MOUNT DRIVE MOTOR COVERS (ITEMS 1) WITH EXISTING HOLES AND BOLTS.

Courtesy of Crane.Market

Item	Part No.	Name	Qty	Uom
1	0080919	COVER, DRIVE MOTOR	2	EA
2	0080920	COVER, HOSES	1	EA
3	5560215	CAPSCREW 3/8-16 X 3/4 INCH LONG DRILLED HEAD	15	EA
4	986299	BOLT HEXHD .313-18 2.50 GR. 5	15	EA
5	987119	BOLT HEXHD .375-16 1.75 GR. 5	15	EA

Courtesy of Crane.Market

REPAIR PARTS

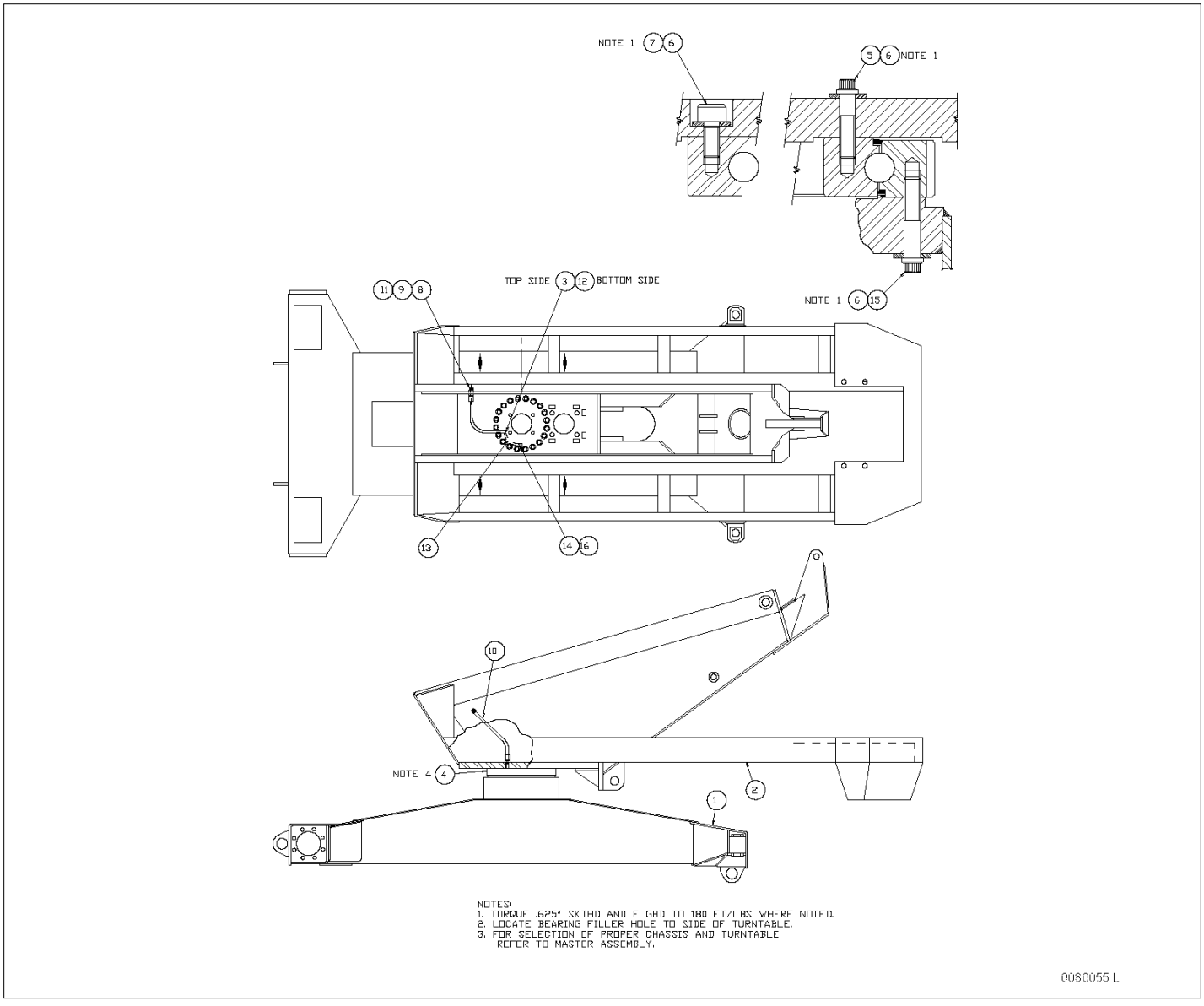

Courtesy of Crane.Market

Item	Part No.	Name	Qty	Uom
1	NOTE 3	SLAVE LEVEL CYLINDER ASSEMBLY	1	EA
2	NOTE 3	SLAVE LEVEL CYLINDER ASSEMBLY	REF	EA
3	5033604	ADAPTER STRAIGHT 1/4 NPTF TO -4 JIC	REF	EA
4	0070021	SLEWING RING	1	EA
5	5560204	HHCS, .625-11 UNC, STL, GR 8, 2.25 LG.	18	EA
6	5560169	WSHR HARD FLAT .625 SP	40	EA
7	5560063	BLT SKTHD .625-11 1.25 HEX SP	2	EA
8	5037102	BULKHEAD CONNECTOR	1	EA
9	5074401	FTG LKNT BDH-4 STL	1	EA
10	0020655	HOSE -4-4S-4S 29.5 100R1	1	EA
11	5570001	GREASE FITTING .125-24NPR STR	1	EA
12	5033704	ADAPTER 90 DEG ELBOW 1/4 NPTF TO -4 JIC	1	EA
13	0070768	HOSE-4-4S-4S 18.5 100R1	1	EA
14	5033703	ADAPTER 90 DEG ELBOW 1/2 NPTF TO -4 JIC	1	EA
15	5563062	BLT FLGH .625-11 2.75 12PT SP	20	EA
16	5036903	SWIVEL NUT 45° ELBOW		EA

Courtesy of Crane.Market

REPAIR PARTS

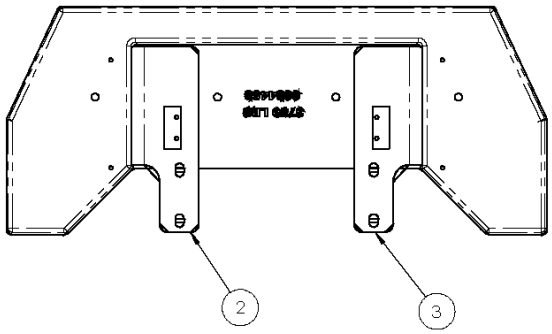

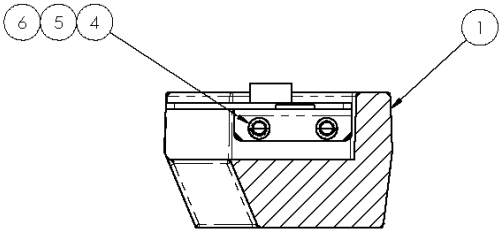

SECTION A-A

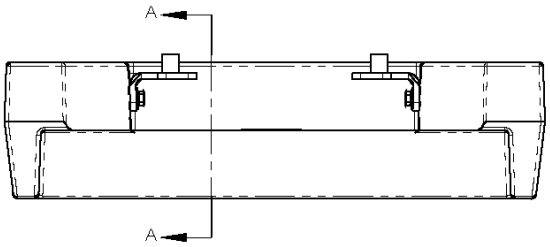

Courtesy of Crane.Market

Item	Part No.	Name	Qty	Uom
1	0084458	CASTING CTW 3750 LBS	1	EA
2	0084485	WLDMT MOUNT LH	1	EA
3	0084486	WLDMT MOUNT RH	1	EA
4	986119	WASHER, FLAT, 1.0 STANDARD, PLATED	4	EA
5	987249	WSHR LOCK 1.0 SPLIT TYPE	4	EA
6	5563143	HHCS 1-8 X 3 GR8 FULL THRD	4	EA

Courtesy of Crane.Market

REPAIR PARTS

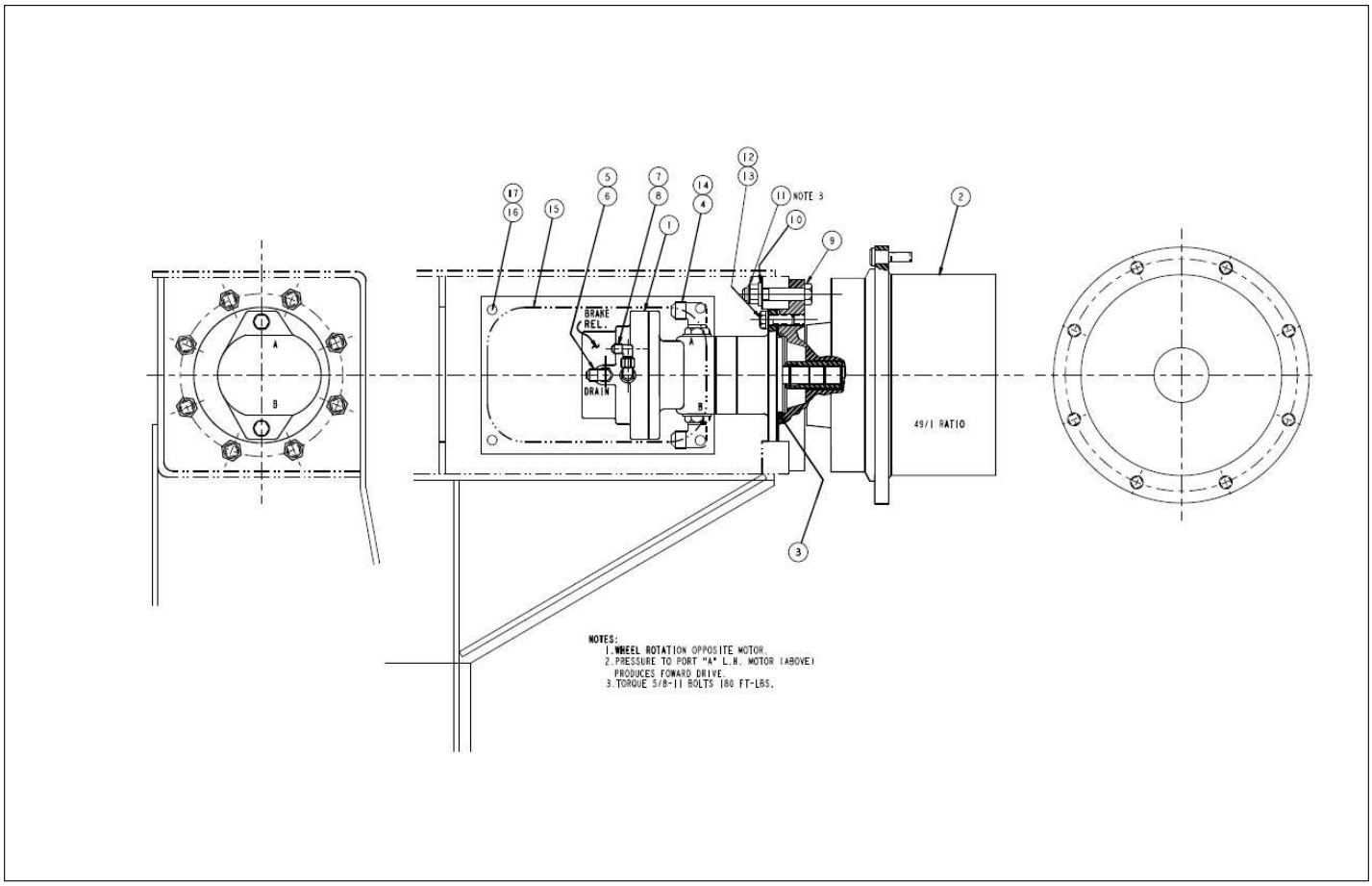

Courtesy of Crane.Market

Item	Part No.	Name	Qty	Uom
1	6030040	MTR W/BRAKE	2	EA
2	0081674	GEAR HUB, HIGH TORQUE	2	EA
3	7110242	O-RING 4.00ID 4.25OD .125 70D AS568 -242-70	2	EA
4	5035308	FTG ELB90STRTHD-12B-12S STL	4	EA
5	5065707	STRAIGHT THREAD ADAPTER - (CENTERPOST PORTS NO 5 AND NO 6) (FITTINGS NOT SHOWN, PORTS MARKED ON PARTS)	2	EA
6	5037005	FTG ELB90SWVL-6S-6S STL	2	EA
7	5035303	FTG ELB90STRTHD-4B-4S STL	2	EA
8	5037003	SWIVEL NUT 90° ELBOW	2	EA
9	PNNA	CSCR 5/8-11 UNC HHD GR5 3-1/4 LONG	16	EA
10	PNNA	WASHER, 5/8", ASTM F436	16	EA
11	5560131	NUT .625-11 ESNA HIGH STRENGTH	16	EA
12	5560078	BLT .50-13 X 2.50 HHCS GR8	4	EA
13	PNNA	LOCKWASHER, 1/2", MED	4	EA
14	5080015	3/4 ID HOSE ASSY (-12)	4	EA
15	0070224	ACCESS COVER, DRIVE	2	EA
16	PNNA	BLT HEX HD .375-16 .750 GR5	8	EA
17	PNNA	WSHR LOCK .375 MDM	8	EA

Courtesy of Crane.Market

REPAIR PARTS

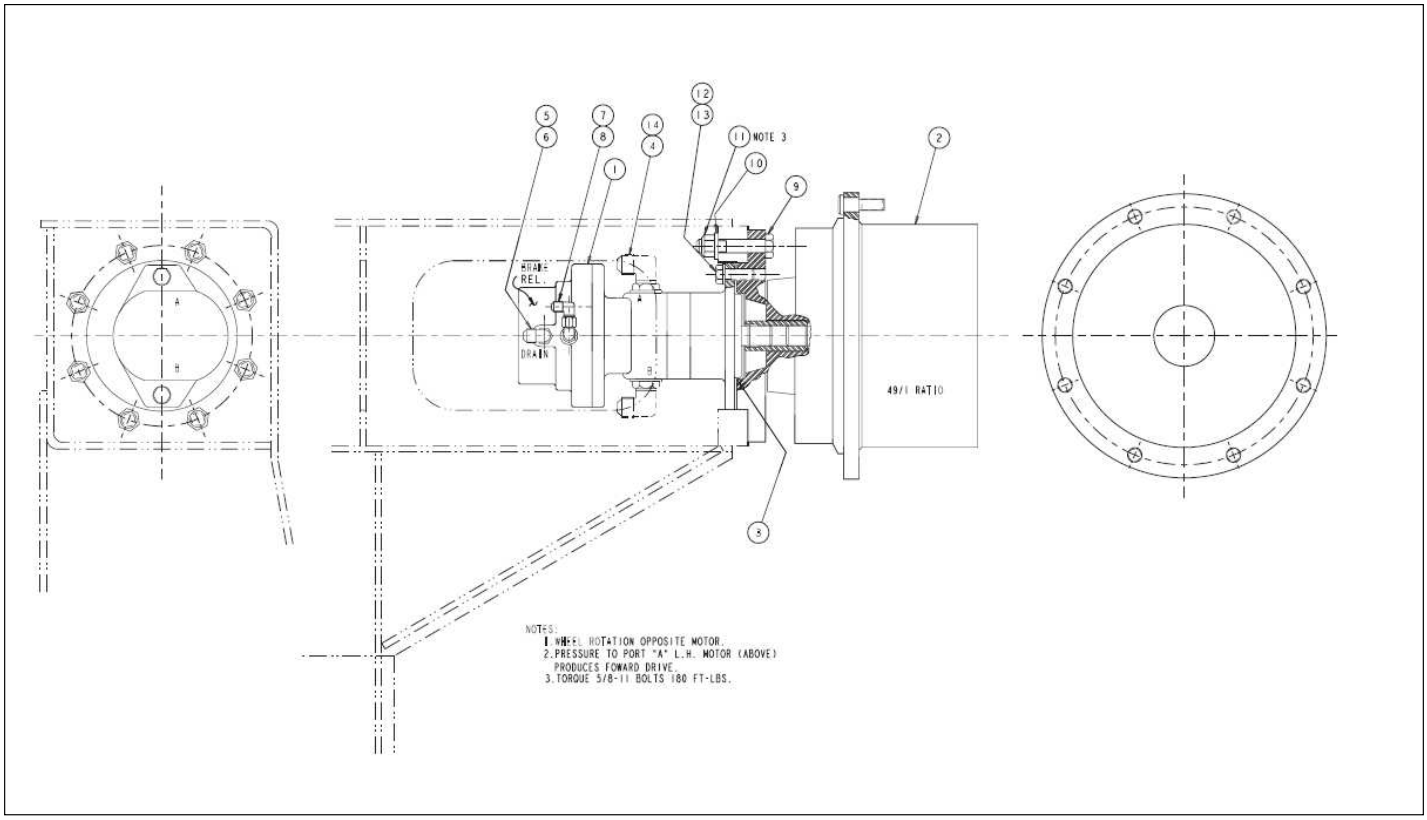

Courtesy of Crane.Market

Item	Part No.	Name	Qty	Uom
1	6030040	MTR W/BRAKE	2	EA
2	0083495	POWER WHEEL ASSY W/STUDS	2	EA
3	7110242	O-RING 4.00ID 4.25OD .125 70D AS568 -242-70	2	EA
4	5035308	FTG ELB90STRTHD-12B-12S STL	4	EA
5	5065707	STRAIGHT THREAD ADAPTER - (CENTERPOST PORTS NO 5 AND NO 6) (FITTINGS NOT SHOWN, PORTS MARKED ON PARTS)	2	EA
6	5037005	FTG ELB90SWVL-6S-6S STL	2	EA
7	5035303	FTG ELB90STRTHD-4B-4S STL	2	EA
8	5037003	SWIVEL NUT 90° ELBOW	2	EA
9	PNNA	CSCR 5/8-11 UNC HHD GR5 3-1/4 LONG	16	EA
10	PNNA	WASHER, 5/8", ASTM F436	16	EA
11	5560131	NUT .625-11 ESNA HIGH STRENGTH	16	EA
12	5560078	BLT .50-13 X 2.50 HHCS GR8	4	EA
13	PNNA	LOCKWASHER, 1/2", MED	4	EA
14	5080015	3/4 ID HOSE ASSY (-12)	4	EA

Courtesy of Crane.Market

REPAIR PARTS

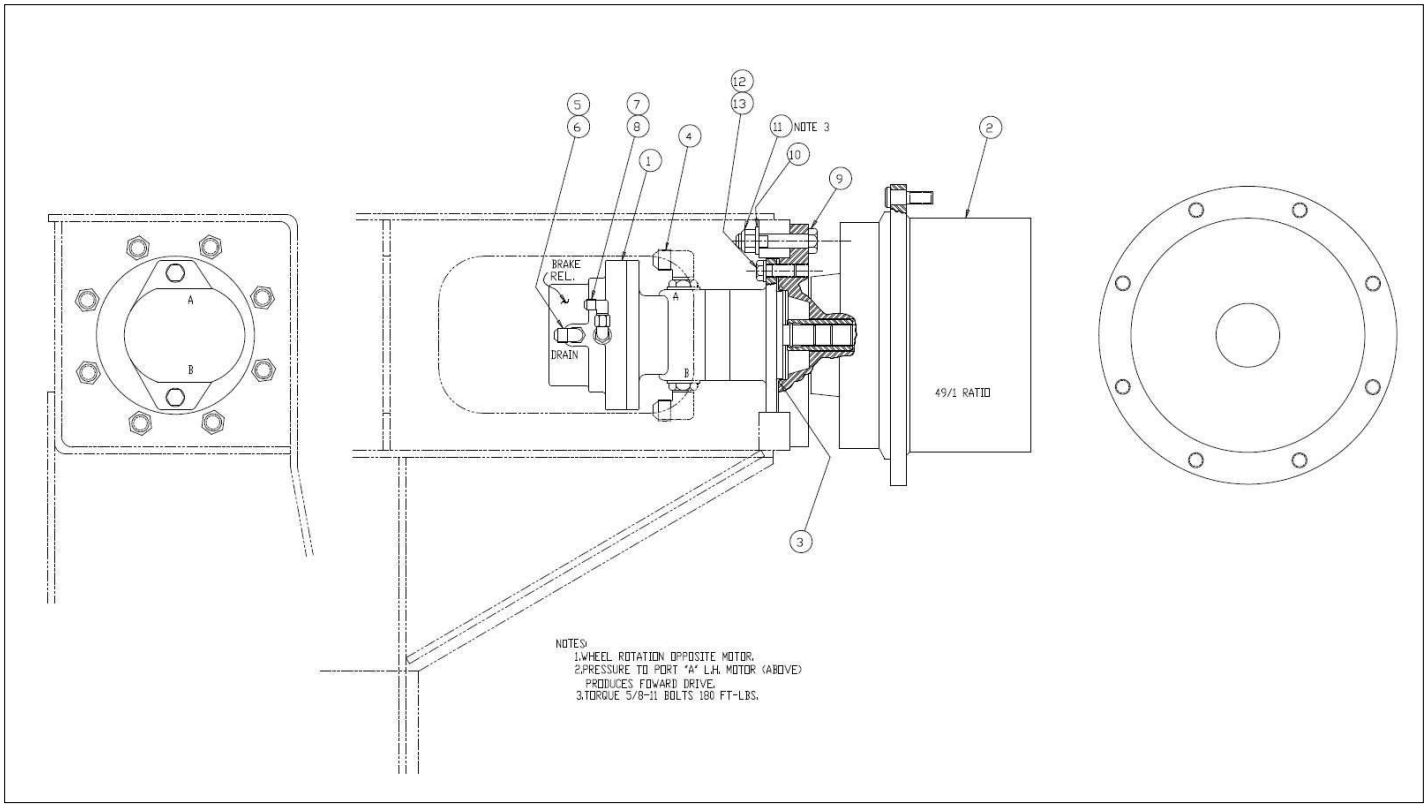

Courtesy of Crane.Market

Item	Part No.	Name	Qty	Uom
1	6030040	MTR W/BRAKE	2	EA
2	0083495	POWER WHEEL ASSY W/STUDS	2	EA
3	7110242	O-RING 4.00ID 4.25OD .125 70D AS568 -242-70	2	EA
4	5035308	FTG ELB90STRTHD-12B-12S STL	4	EA
5	5065707	STRAIGHT THREAD ADAPTER - (CENTERPOST PORTS NO 5 AND NO 6) (FITTINGS NOT SHOWN, PORTS MARKED ON PARTS)	2	EA
6	5037005	FTG ELB90SWVL-6S-6S STL	2	EA
7	5035303	FTG ELB90STRTHD-4B-4S STL	2	EA
8	5037003	SWIVEL NUT 90° ELBOW	2	EA
9	5560642	CAPSCREW 5/8-11 X 3-1/4 INCH LONG HEX HEAD GRADE 5	16	EA
10	5560169	WSHR HARD FLAT .625 SP	16	EA
11	5560131	NUT .625-11 ESNA HIGH STRENGTH	16	EA
12	5560078	BLT .50-13 X 2.50 HHCS GR8	4	EA
13	987139	WASHER LOCK .500	4	EA

Courtesy of Crane.Market

REPAIR PARTS

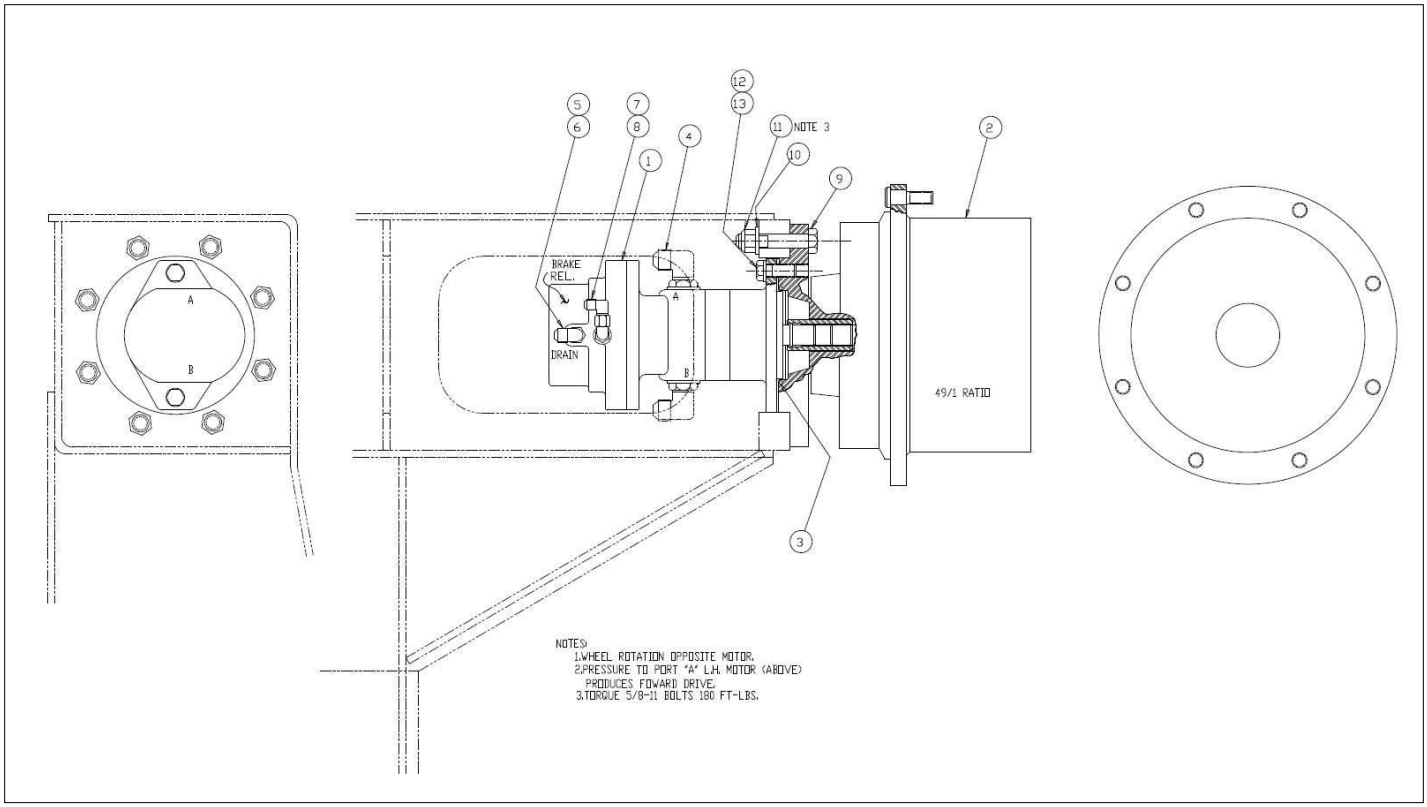

Courtesy of Crane.Market

Item	Part No.	Name	Qty	Uom
1	6030040	MTR W/BRAKE	2	EA
2	0083495	POWER WHEEL ASSY W/STUDS	2	EA
3	7110242	O-RING 4.00ID 4.25OD .125 70D AS568 -242-70	2	EA
4	5035308	FTG ELB90STRTHD-12B-12S STL	4	EA
5	5065707	STRAIGHT THREAD ADAPTER - (CENTERPOST PORTS NO 5 AND NO 6) (FITTINGS NOT SHOWN, PORTS MARKED ON PARTS)	2	EA
6	5037005	FTG ELB90SWVL-6S-6S STL	2	EA
7	5035303	FTG ELB90STRTHD-4B-4S STL	2	EA
8	5037003	SWIVEL NUT 90° ELBOW	2	EA
9	5560642	CAPSCREW 5/8-11 X 3-1/4 INCH LONG HEX HEAD GRADE 5	16	EA
10	5560169	WSHR HARD FLAT .625 SP	16	EA
11	5560131	NUT .625-11 ESNA HIGH STRENGTH	16	EA
12	5560078	BLT .50-13 X 2.50 HHCS GR8	4	EA
13	987139	WASHER LOCK .500	4	EA

Courtesy of Crane.Market

REPAIR PARTS

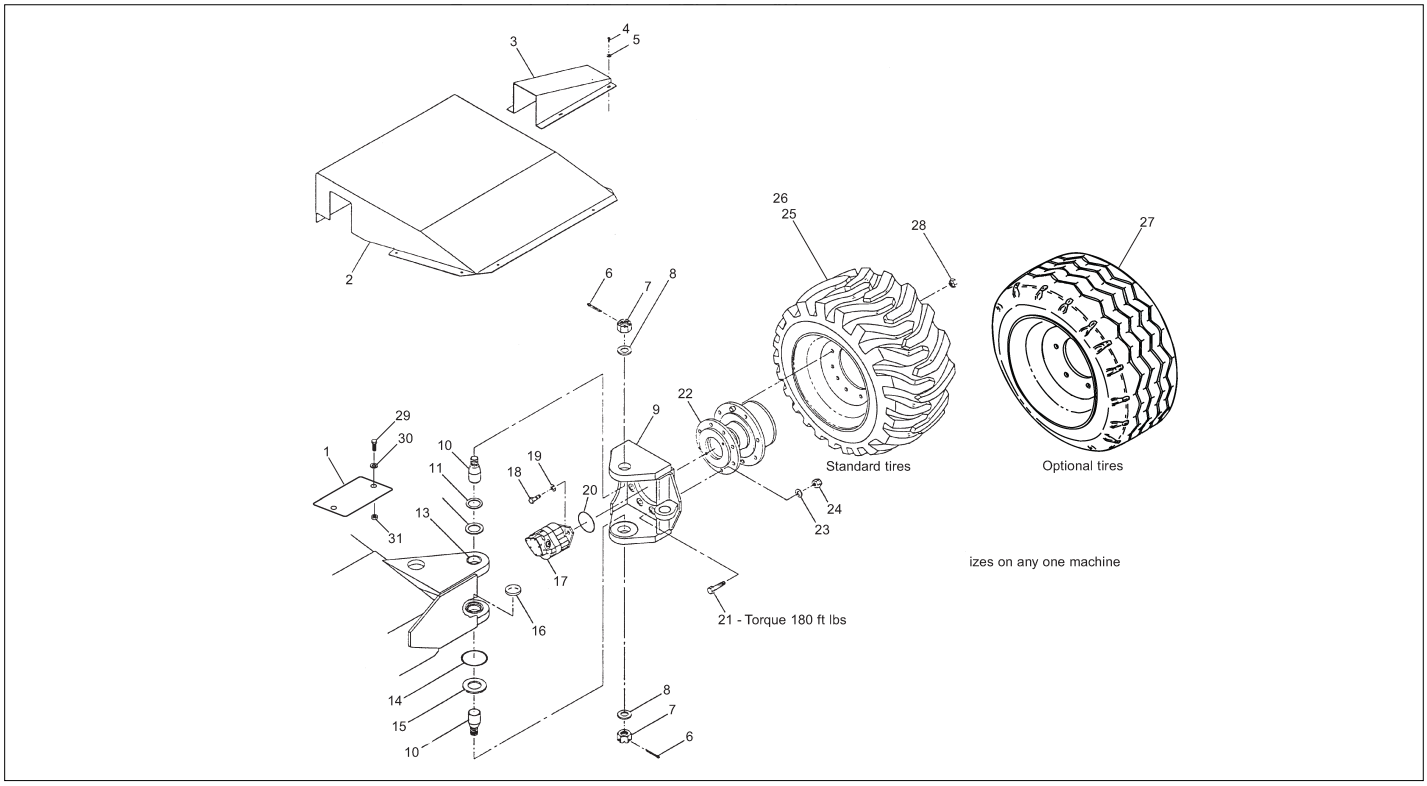

Courtesy of Crane.Market

Item	Part No.	Name	Qty	Uom
1	0082282	COVER, CHASSIS - 4 WHEEL DRIVE	1	EA
2	0080920	COVER, HOSES	1	EA
3	0080919	COVER, DRIVE MOTOR	2	EA
4	970449	CAPSCREW 3/8-16 X 3/4 INCH LONG HEX HEAD GRADE 5	9	EA
5	986299	BOLT HEXHD .313-18 2.50 GR. 5	17	EA
6	988229	COTTER PIN 1/4 INCH DIAMETER X 2-1/2 INCH LONG	4	EA
7	5560018	SPINDLE NUT	4	EA
8	0072438	WASHER	4	EA
9	0083573	WELDMENT STEER YOKE	2	EA
10	0080885	KING PIN	2	EA
11	5560089	SHIM .031	2	EA
Not Shown	5560091	SHIM	2	EA
12	5560660	MACHINE BUSHING 3 INCH OD X 2 INCH ID X 14 GAUGE THICK	6	EA
13	2503220	BEARING, GARMAX #GM 3236-20	4	EA
14	0080948	O-RING, SPECIAL	2	EA
15	2580001	THRUST BEARING	2	EA
16	0070026	KING PIN CAP	2	EA
17	6030018	HYDRAULIC MOTOR WITHOUT BRAKE (NOTE 4)	2	EA
18	5560078	BLT .50-13 X 2.50 HHCS GR8	4	EA
19	987139	WASHER LOCK .500	4	EA
20	7110242	O-RING 4.00ID 4.25OD .125 70D AS568 -242-70	2	EA
21	5560640	BOLT HEXHD, 5/8-11 X 3" LG, GR8	16	EA
22	0081674	GEAR HUB, HIGH TORQUE	2	EA
23	5560169	WSHR HARD FLAT .625 SP	16	EA

Courtesy of Crane.Market

Item	Part No.	Name	Qty	Uom
24	5560131	NUT .625-11 ESNA HIGH STRENGTH	16	EA
25	0080965	TIRE AND WHEEL, FOAM FILLED RIGHT HAND 15-19.5 12 PLY LUG	1	EA
26	0080966	TIRE AND WHEEL, FOAM FILLED LEFT HAND 15-19.5 12 PLY LUG	1	EA
27	0081462	TIRE AND WHEEL, FOAM FILLED 15-19.5 14 PLY HIGHWAY	2	EA
28	7280001	LUG NUT	16	EA
29	970889	CAPSCREW 1/2-13 X 1 INCH LONG HEX HEAD GRADE 5	2	EA
30	986359	WASHER 1/2 MEDIUM FLAT	2	EA
31	5560039	NUT LKG .500-13	2	EA

Courtesy of Crane.Market

REPAIR PARTS

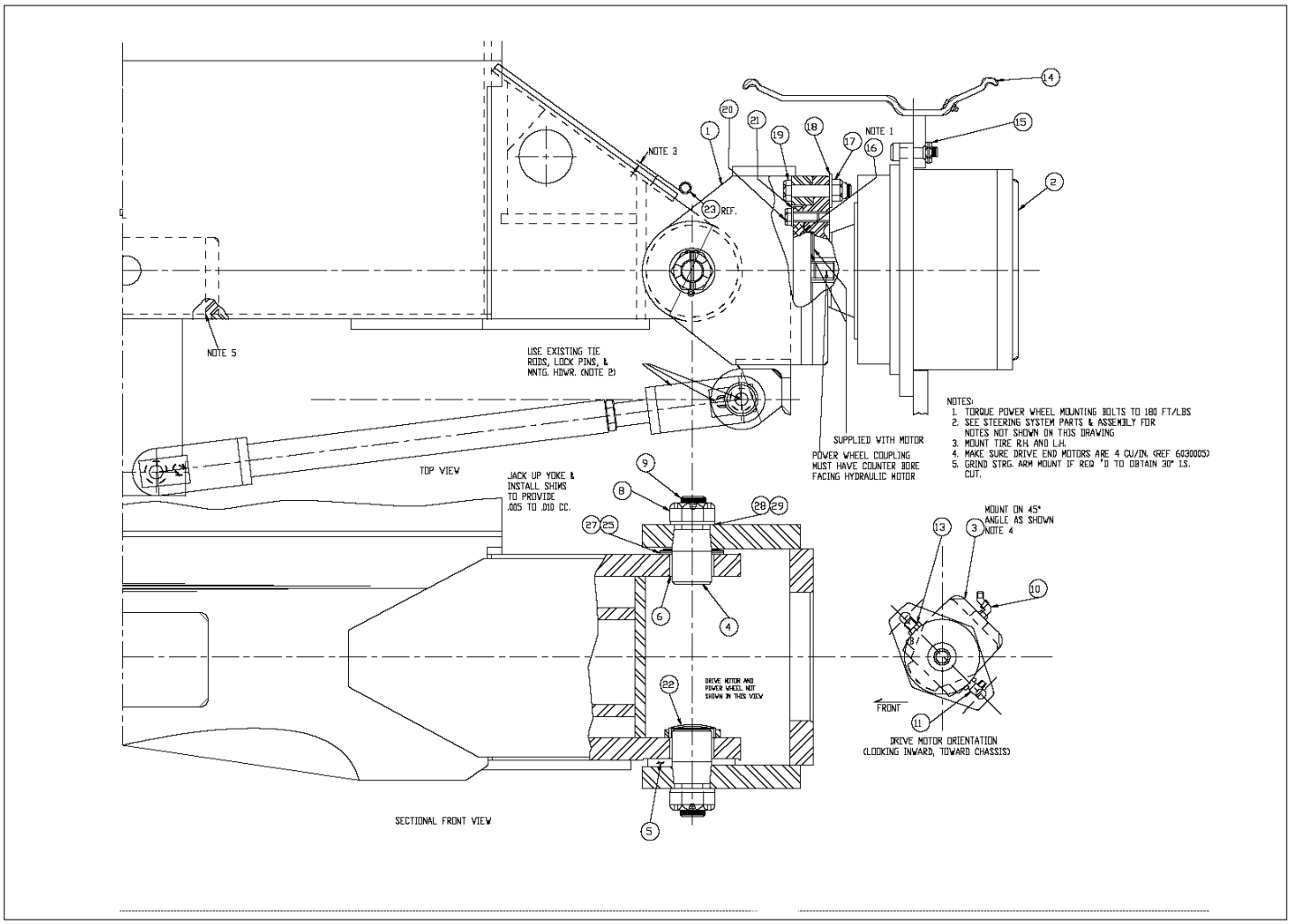

Courtesy of Crane.Market

Item	Part No.	Name	Qty	Uom
1	0083573	WELDMENT STEER YOKE	2	EA
2	0083495	POWER WHEEL ASSY W/STUDS	2	EA
3	6030018	HYDRAULIC MOTOR WITHOUT BRAKE (NOTE 4)	2	EA
4	0080885	KING PIN	4	EA
5	2580001	THRUST BEARING	2	EA
6	2503220	BEARING, GARMAX #GM 3236-20	4	EA
8	5560018	SPINDLE NUT	4	EA
9	5560714	COT PIN, 3/16 DIA X 2-1/2" LG, STEEL	4	EA
10	5035305	FTG ELB90STRTHD-6B-6S STL	2	EA
11	5035308	FTG ELB90STRTHD-12B-12S STL	2	EA
13	5065714	FTG ADPTR STRTHD-12B-12S STL-P	2	EA
14	0080965/66	TIRE AND WHEEL ASSY DRIVE RH AND LH	REF	EA
15	7280001	LUG NUT	REF	EA
16	7110242	O-RING 4.00ID 4.25OD .125 70D AS568 -242-70	2	EA
17	5560131	NUT .625-11 ESNA HIGH STRENGTH	16	EA
18	5560169	WSHR HARD FLAT .625 SP	16	EA
19	5560640	BOLT HEXHD, 5/8-11 X 3" LG, GR8	16	EA
20	5560078	BLT .50-13 X 2.50 HHCS GR8	4	EA
21	987139	WASHER LOCK .500	5	EA
22	5070026	CAP WHEEL SERVICE-	2	EA
25	5569974	BSHG MCHRY 2ID X 3OD 14GA	6	EA
27	5560089	SHIM .031	2	EA
28	5560252	MACHINE BUSHING 2-1/4 INCH OD X 1-1/4 INCH ID X 14 GAUGE THICK	4	EA

Courtesy of Crane.Market

Item	Part No.	Name	Qty	Uom
29	5569952	1.25 X 2.25 10GA MACHINE WASHER	4	EA

Courtesy of Crane.Market

REPAIR PARTS

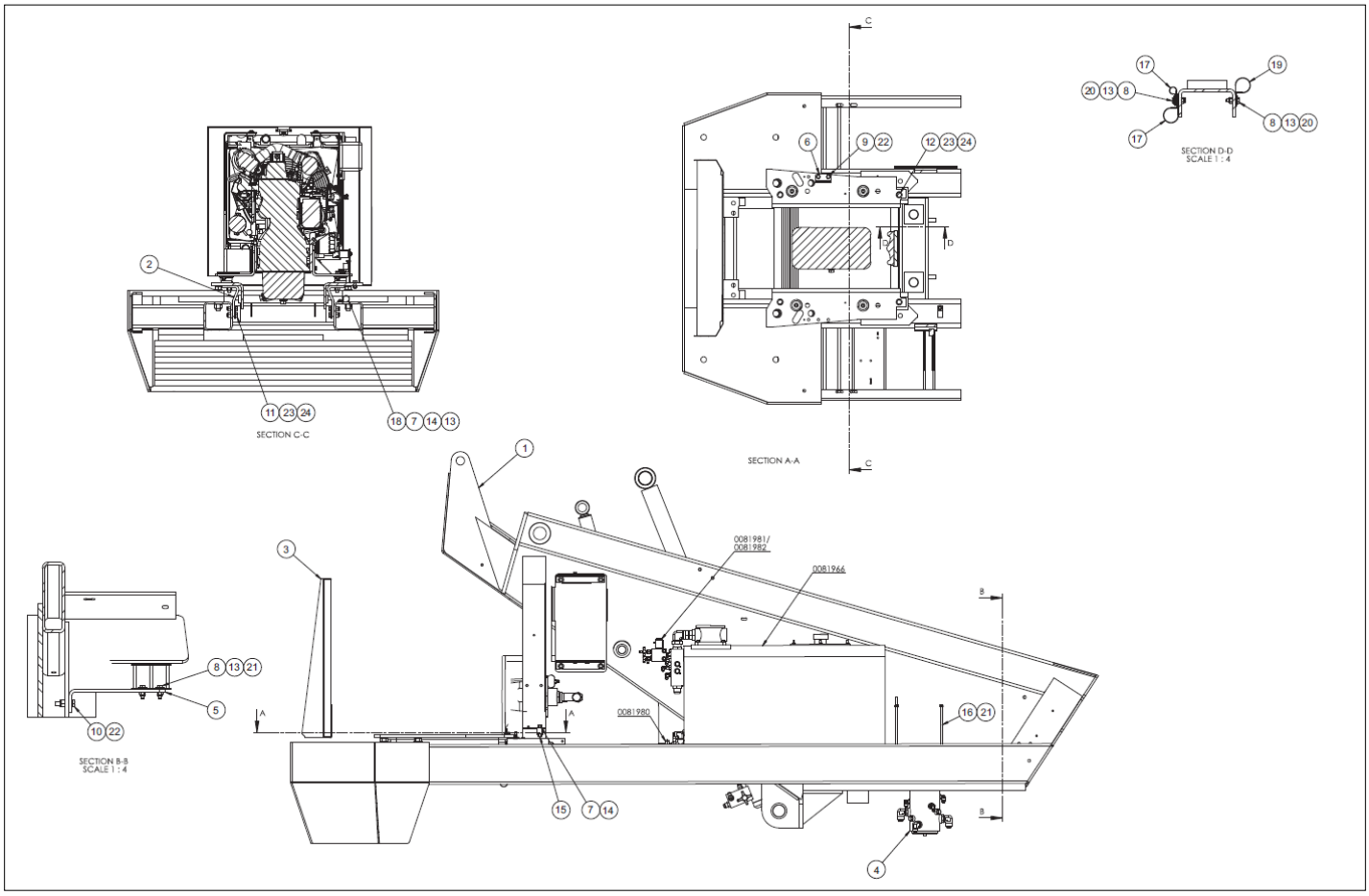

Courtesy of Crane.Market

Item	Part No.	Name	Qty	Uom
1	0082312	WELDMENT TURNTABLE TB60	1	EA
2	0083438	ENGINE MOUNT CUMMINGS	5	EA
3	0084708	KU V2403 ENGINE SUB ASSEMBLY	1	EA
4	0080054	LIFT/SWING/CW	1	EA
5	0181503	BRACKET, TILT ALARM	1	EA
6	0192289	BRKT, GLOW PLUG TIMER	1	EA
7	970009	BLT HEXHD .250-20 .500 GR5-	5	EA
8	970049	BOLT HEXHD .250-20 1.00 GR. 5	6	EA
9	970469	BOLT HEXHD .375-16 1.00 GR. 5	4	EA
10	970489	CAPSCREW 3/8-16 X 1-1/2 INCH LONG HEX HEAD GRADE 5	2	EA
11	970909	BOLT HEXHD .500-13 1.50 GR5	8	EA
12	970919	BLT HEXHD .500-13 1.75 GR5	4	EA
13	986019	WASHER FLAT .250	11	EA
14	987099	WASHER LOCK .250	5	EA
15	3040469	RELAY SPDT 12V 30AMP SONG	2	EA
16	3050004	BATTERY HOLDDOWN BOLT	2	EA
17	5093002	CLAMP	2	EA
18	5093008	CLIP CUSSION 1.05 VINYL COATED	3	EA
19	5093024	CLAMP	4	EA
20	5560004	NUT HEXHD .250-20 LKG	7	EA
21	5560031	NUT HEX LKG .313-18	2	EA
22	5560033	NUT HEXHD .375-16 LKG	4	EA
23	5560039	NUT LKG .500-13	12	EA
24	5560168	WSHR HARD FLAT .500 SP	12	EA
101	0070705	BATTERY WIRE	1	EA
102	0075268	WIRE 2/0 R375 R375 13 BLK	1	EA
103	0080482	JUMPER WIRE	1	EA

Courtesy of Crane.Market

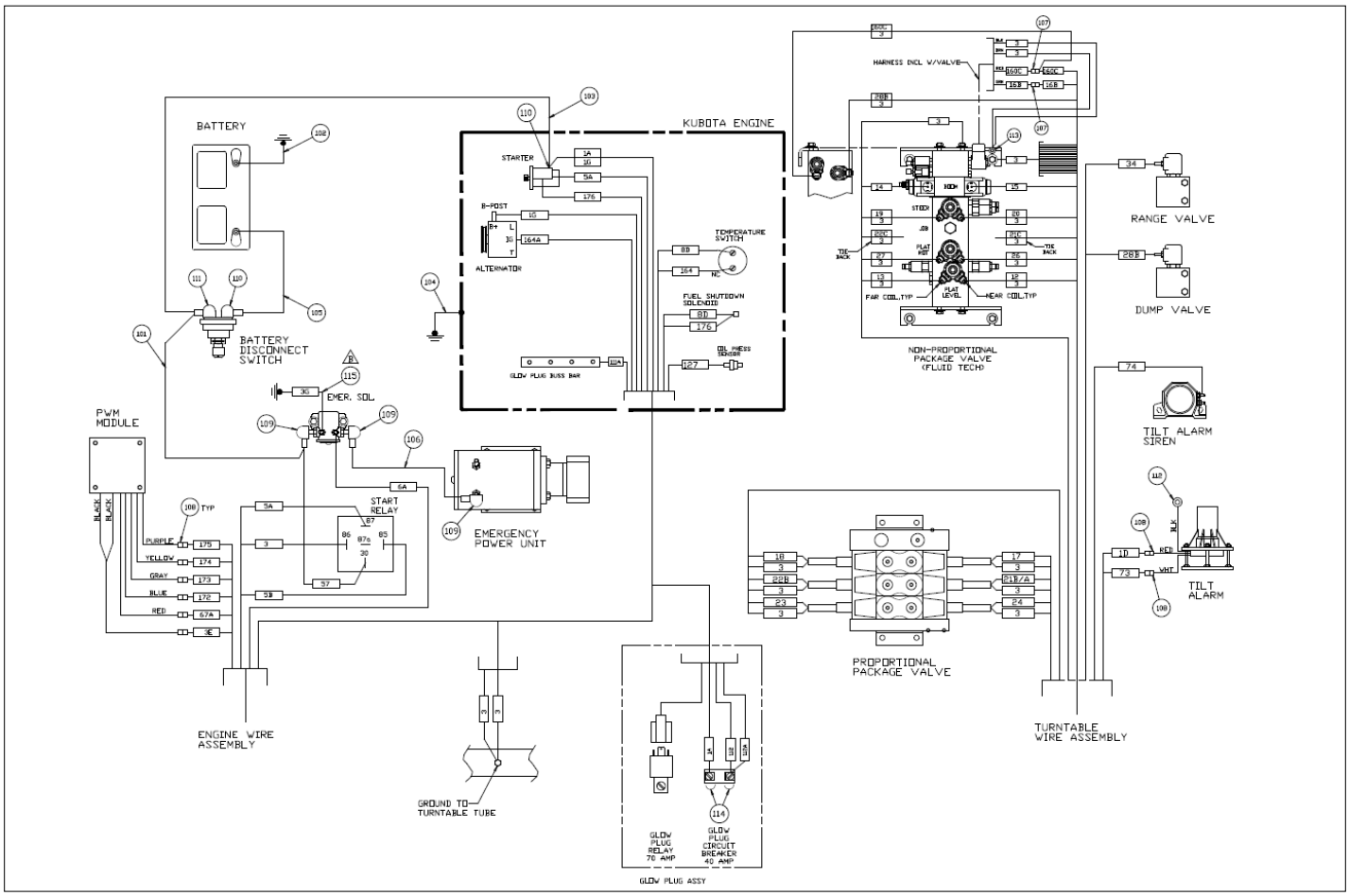

Courtesy of Crane.Market

Item	Part No.	Name	Qty	Uom
104	0080483	BATTERY WIRE	1	EA
105	0080484	WIRE 2/0 R375 R375 13 RED	1	EA
106	0090319	JUMPER WIRE	1	EA
107	3040046	TERM, .250 MALE SLIP-ON F.I. 22/18 WIRE	2	EA
108	3040082	TERM MALE250FI 16/14	8	EA
109	3040268	BOOT	3	EA
110	3040269	BOOT BTRY CABLE END BLK 1/0 GA	2	EA
111	3040270	BOOT BATTERY CABLE END Y-TYPE	1	EA
112	3044162	TERM, 1/4 STUD INS. 16/14 WIRE	1	EA
113	961089	TERM R101 16/14	1	EA
114	3040452	BOOT	2	EA
115	0071568	WIRE 12 R10I R250I 4	1	EA

Courtesy of Crane.Market

REPAIR PARTS

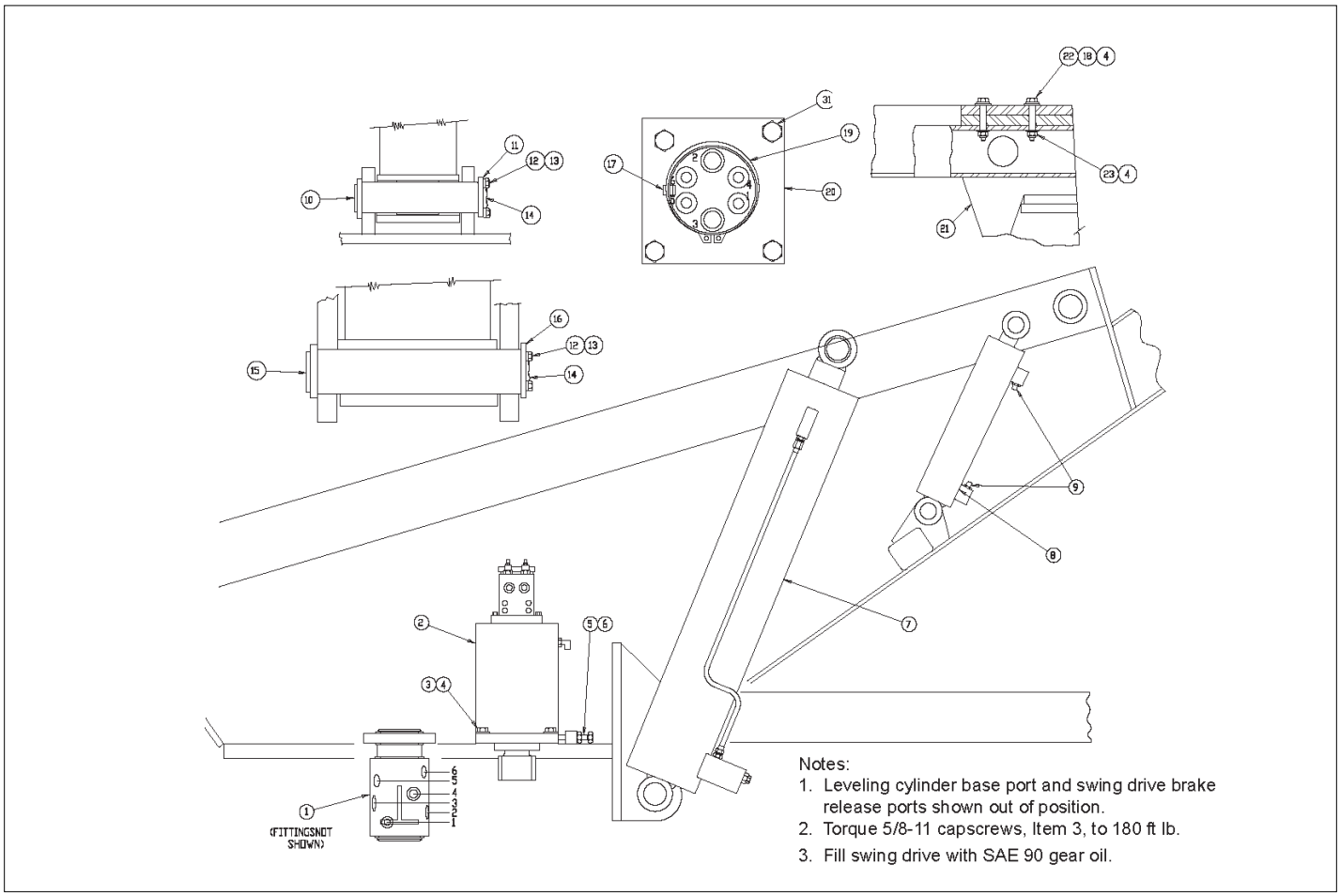

Courtesy of Crane.Market

Item	Part No.	Name	Qty	Uom
1	0081486	CENTERPOST AND FITTINGS	1	EA
2	0073026	SWING DRIVE	1	EA
3	5560051	CAPSCREW 5/8-11 SELF LOCKING	8	EA
4	5560171	WASHER, 7/8 HARD FLAT ASTM F-436	8	EA
5	5560022	ADJUSTMENT BOLT	6	EA
6	984449	NUT HEX JAM .625-11	6	EA
7	0080053	LIFT CYLINDER AND TUBE ASSY	1	EA
8	0172223	CYLINDER 4.0 BORE MASTER LEVEL	1	EA
9	5065707	STRAIGHT THREAD ADAPTER -(CENTERPOST PORTS NO 5 AND NO 6) (FITTINGS NOT SHOWN, PORTS MARKED ON PARTS)	2	EA
10	0070442	WLDMT PIN 1.50 5.875 GRIP	1	EA
11	0070033	PIN LOCK	1	EA
12	0070473	CAPSCREW 5/16-18 DRILLED HEAD	4	EA
13	987109	WASHER LOCK .313	4	EA
14	9980012	.040 INCH DIAMETER STAINLESS STEEL SAFETY LOCKWIRE -(SOLD IN ONE POUND CAN)	1	EA
15	0080020	PIN LIFT CYL TO TURNTABLE	1	EA
16	0080023	PIN LOCK	1	EA
17	0070472	KEY	1	EA
18	5560170	WASHER 3/4 HARD FLAT ASTM-F436	4	EA
19	5590003	RETAINING RING	2	EA
20	0040256	ADAPTER PLATE CENTERPOST	1	EA
21	PNNA	COUNTERWEIGHT	1	EA

Courtesy of Crane.Market

Item	Part No.	Name	Qty	Uom
22	5561157	BOLT HEX HD .750-10 X 3.00 GR8	4	EA
23	5560193	NUT 3/4-10 HIGH STRENGTH	4	EA

Courtesy of Crane.Market

REPAIR PARTS

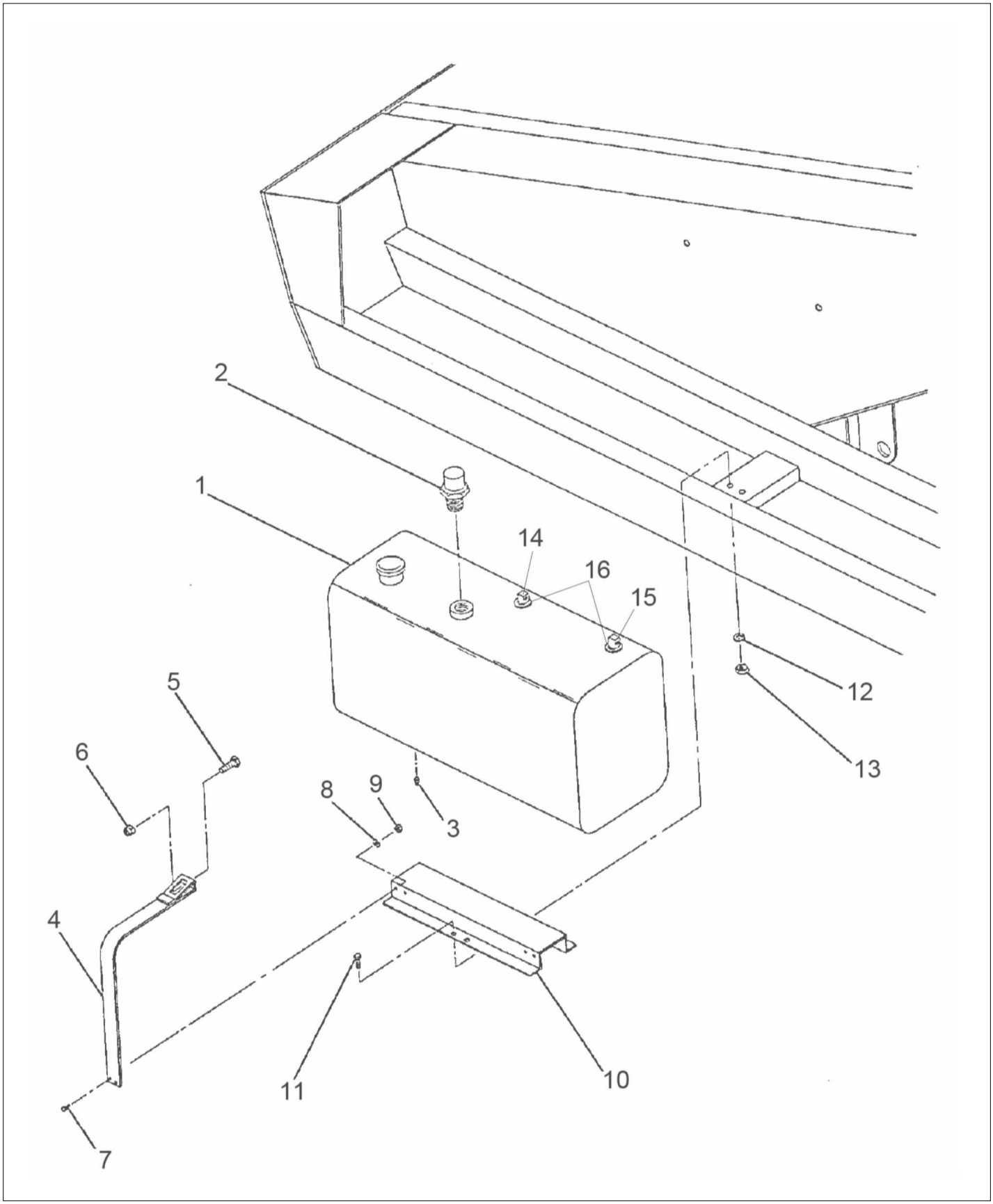

Courtesy of Crane.Market

Item	Part No.	Name	Qty	Uom
1	0082906	FUEL TANK, 40 GALLON – REPLACED BY 0084121	1	EA
Not Shown	9940001	FUEL TANK CAP – BEFORE SEPTEMBER 2010	1	EA
Not Shown	0084121	FUEL TANK 40 GAL T3 TB60	1	EA
Not Shown	0084570	FUEL TANK CAP – AFTER SEPTEMBER 2010	1	EA
2	0070483	GAUGE	1	EA
Not Shown	8180014	REPLACEMENT GAUGE LENS	1	EA
3	7714202	PIPE PLUG 1/4 NPT SQUARE HEAD	1	EA
4	0071940	FUEL TANK STRAP	2	EA
5	970599	BLT HEXHD .375-16 4.00 GR5	2	EA
6	5560033	NUT HEXHD .375-16 LKG	2	EA
7	970029	CAPSCREW 1/4-20 X 3/4 INCH LONG HEX HEAD GRADE 5	4	EA
8	987099	WASHER LOCK .250	4	EA
9	984069	NUT HEX .250-20	4	EA
10	0080031	FUEL TANK SUPPORT	1	EA
11	970469	BOLT HEXHD .375-16 1.00 GR. 5	8	EA
12	987119	BOLT HEXHD .375-16 1.75 GR. 5	8	EA
13	984109	NUT HEXHD .375-16	8	EA
14	5090032	ADAPTER, STRAIGHT BARBED	1	EA
15	5093037	FTG STR-4H-4N BR	1	EA
16	5010011	HOSE SAE30R2-05 .312 FUEL	REF	EA

Courtesy of Crane.Market

REPAIR PARTS

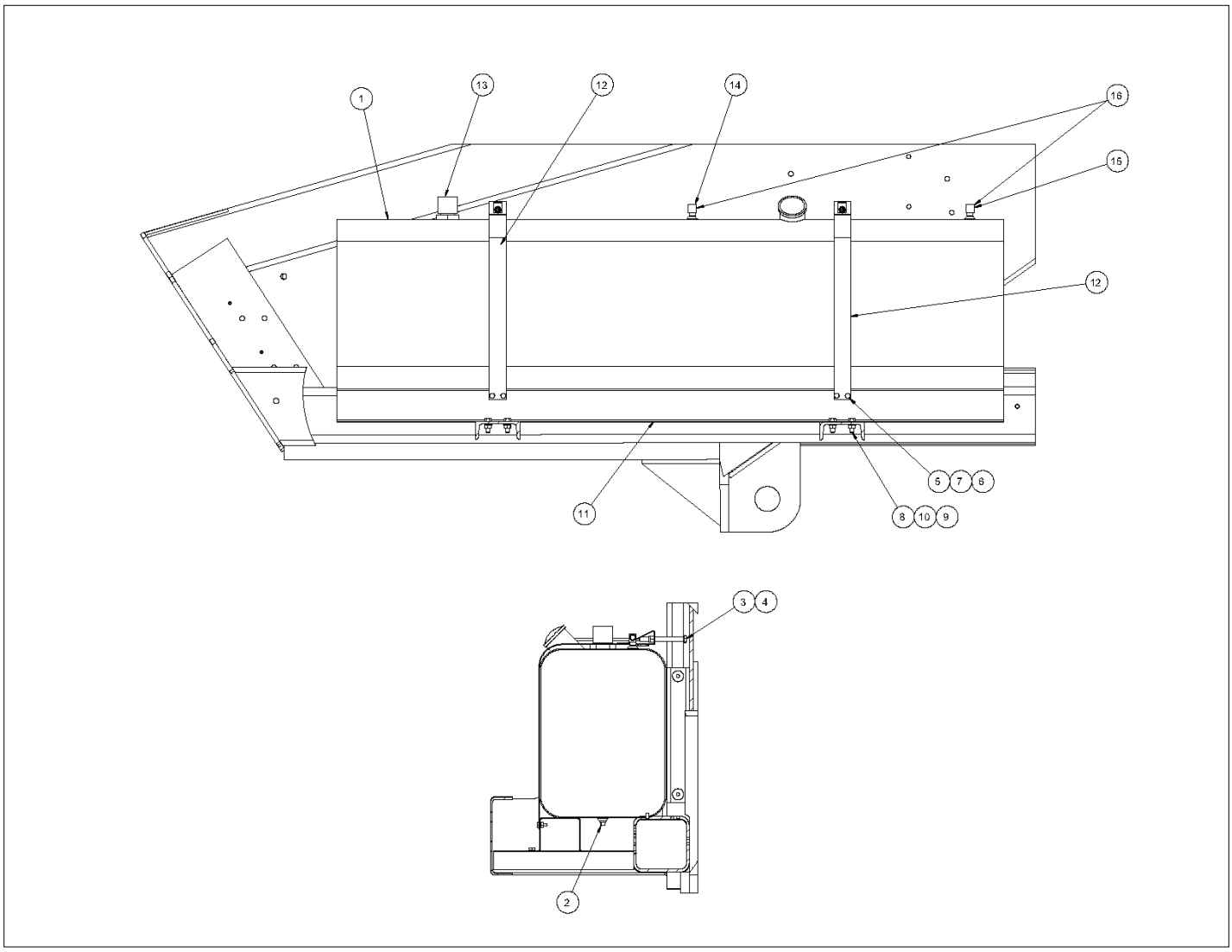

Courtesy of Crane.Market

Item	Part No.	Name	Qty	Uom
1	0084121	FUEL TANK 40 GAL T3 TB60	1	EA
Not Shown	0084570	FUEL TANK CAP – AFTER SEPTEMBER 2010	1	EA
2	7714202	PIPE PLUG 1/4 NPT SQUARE HEAD	1	EA
3	970599	BLT HEXHD .375-16 4.00 GR5	2	EA
4	5560033	NUT HEXHD .375-16 LKG	2	EA
5	970029	CAPSCREW 1/4-20 X 3/4 INCH LONG HEX HEAD GRADE 5	4	EA
6	984069	NUT HEX .250-20	4	EA
7	987099	WASHER LOCK .250	4	EA
8	970469	BOLT HEXHD .375-16 1.00 GR. 5	4	EA
9	984109	NUT HEXHD .375-16	4	EA
10	987119	BOLT HEXHD .375-16 1.75 GR. 5	4	EA
11	0080031	FUEL TANK SUPPORT	1	EA
12	0071940	FUEL TANK STRAP	2	EA
13	0070483	GAUGE	1	EA
Not Shown	8180014	REPLACEMENT GAUGE LENS	1	EA
14	5090032	ADAPTER, STRAIGHT BARBED	1	EA
15	5093037	FTG STR-4H-4N BR	1	EA
16	5010011	HOSE SAE30R2-05 .312 FUEL	REF	EA

Courtesy of Crane.Market

REPAIR PARTS

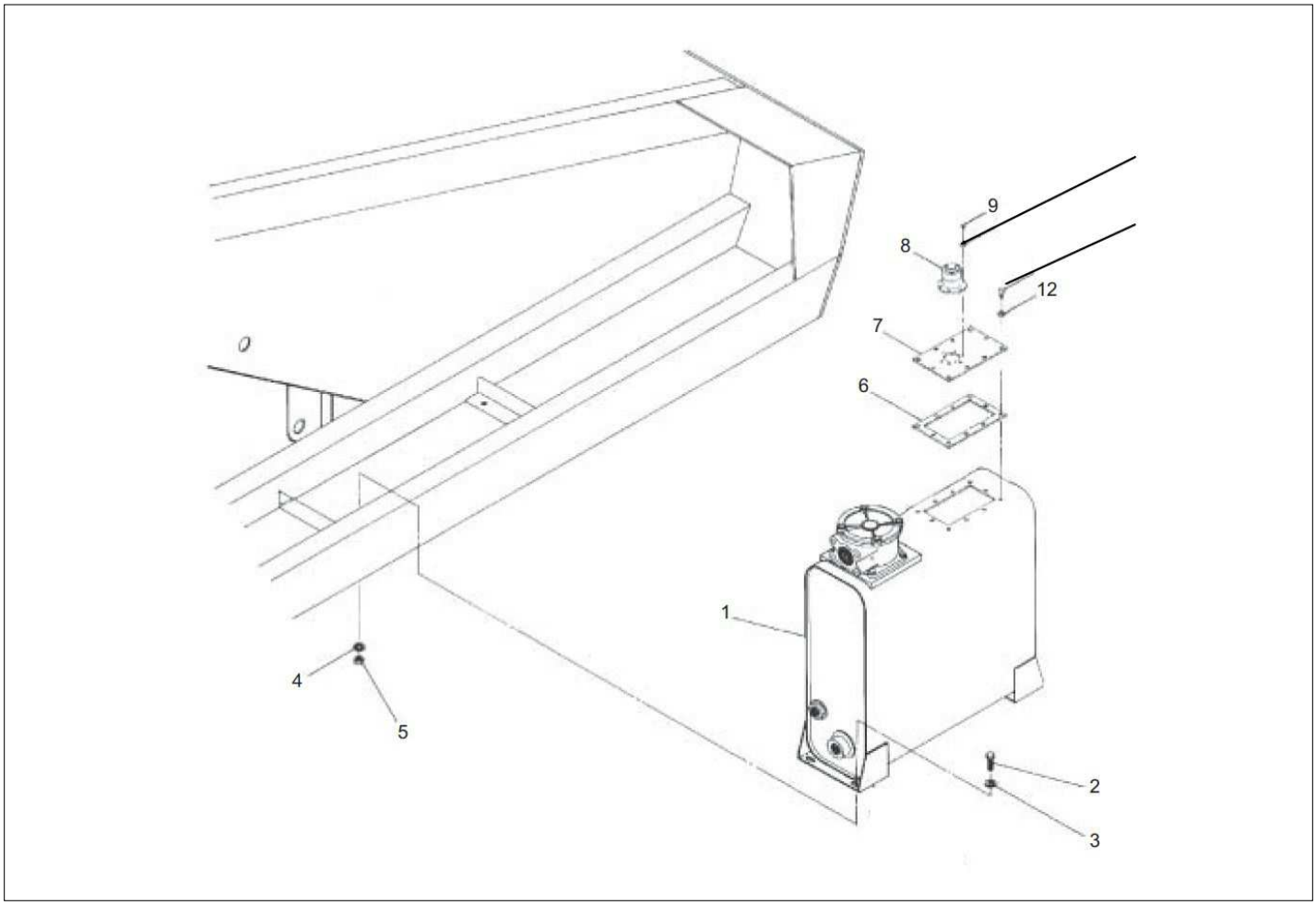

Courtesy of Crane.Market

Item	Part No.	Name	Qty	Uom
1	0081875	HYDRAULIC OIL RESERVOIR	1	EA
2	970479	CAPSCREW 3/8-16 X 1-1/4 INCH LONG HEX HEAD GRADE 5	4	EA
3	986299	BOLT HEXHD .313-18 2.50 GR. 5	4	EA
4	987119	BOLT HEXHD .375-16 1.75 GR. 5	4	EA
5	984109	NUT HEXHD .375-16	4	EA
6	8010249	COVER GASKET	1	EA
7	8010250	COVER PLATE	1	EA
8	5090008	FILTER/BREATHER CAP ASSY	1	EA
9	5560609	SCR TRHD 10-24 .50	6	EA
10	987089	#10 LOCK WASHER	6	EA
11	970369	CAPSCREW 5/16-18	6	EA
12	987109	WASHER LOCK .313	6	EA

Courtesy of Crane.Market

REPAIR PARTS

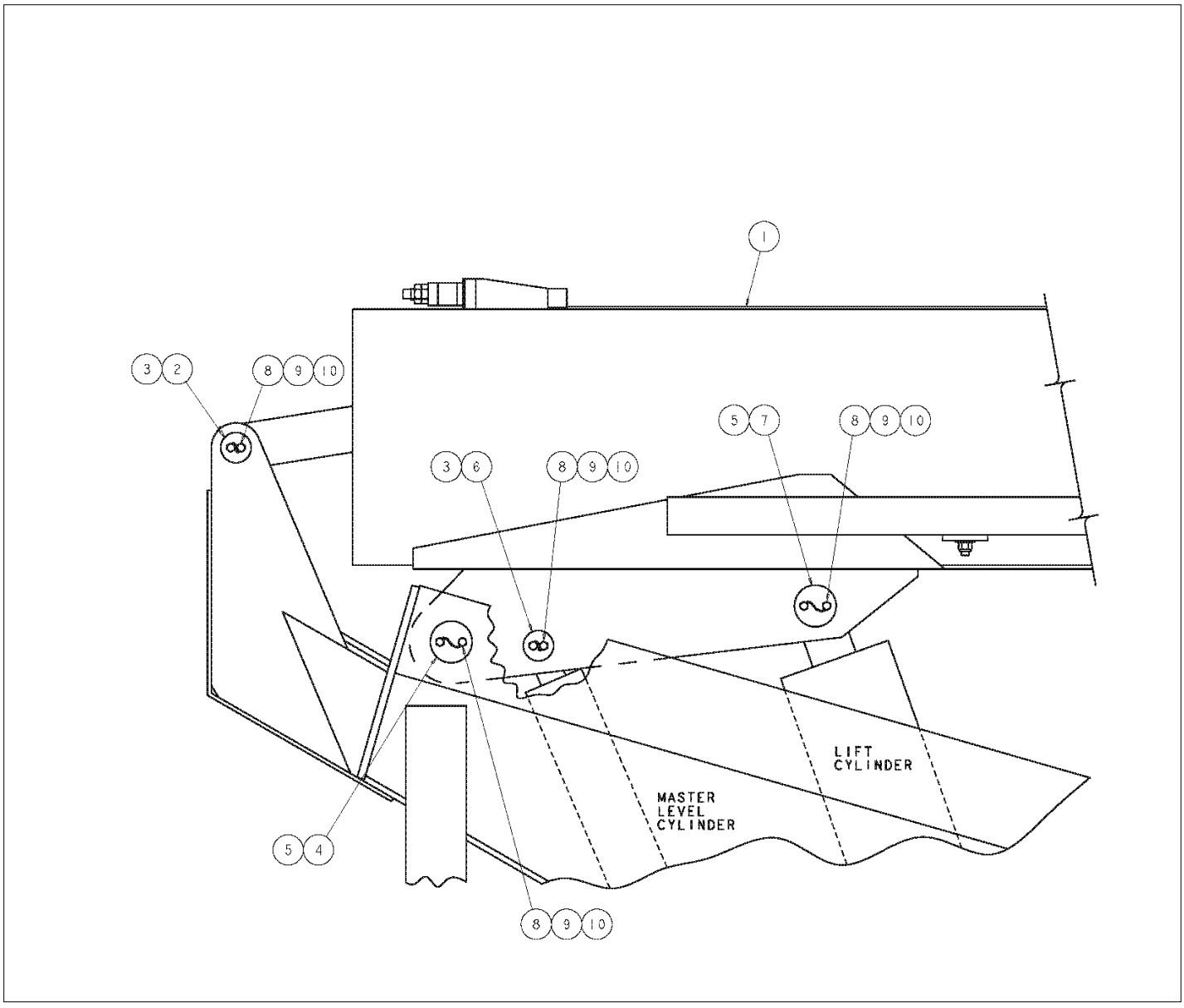

Courtesy of Crane.Market

Item	Part No.	Name	Qty	Uom
1	0084280	ASSEMBLY BOOM/HOSE CARRIER TB65J	1	EA
2	0070440	LINK PIN	1	EA
3	0070033	PIN LOCK	2	EA
4	0080026	PIN, BASE BOOM TO TURNTABLE	1	EA
5	0080023	PIN LOCK	2	EA
6	0080028	PIN, MASTER LEVEL CYLINDER ROD END	1	EA
7	0080024	PIN, LIFT CYLINDER ROD END	1	EA
8	0070473	CAPSCREW 5/16-18 DRILLED HEAD	8	EA
9	987109	WASHER LOCK .313	8	EA
10	9980012	.040 INCH DIAMETER STAINLESS STEEL SAFETY LOCKWIRE -(SOLD IN ONE POUND CAN)	1	EA

Courtesy of Crane.Market

REPAIR PARTS

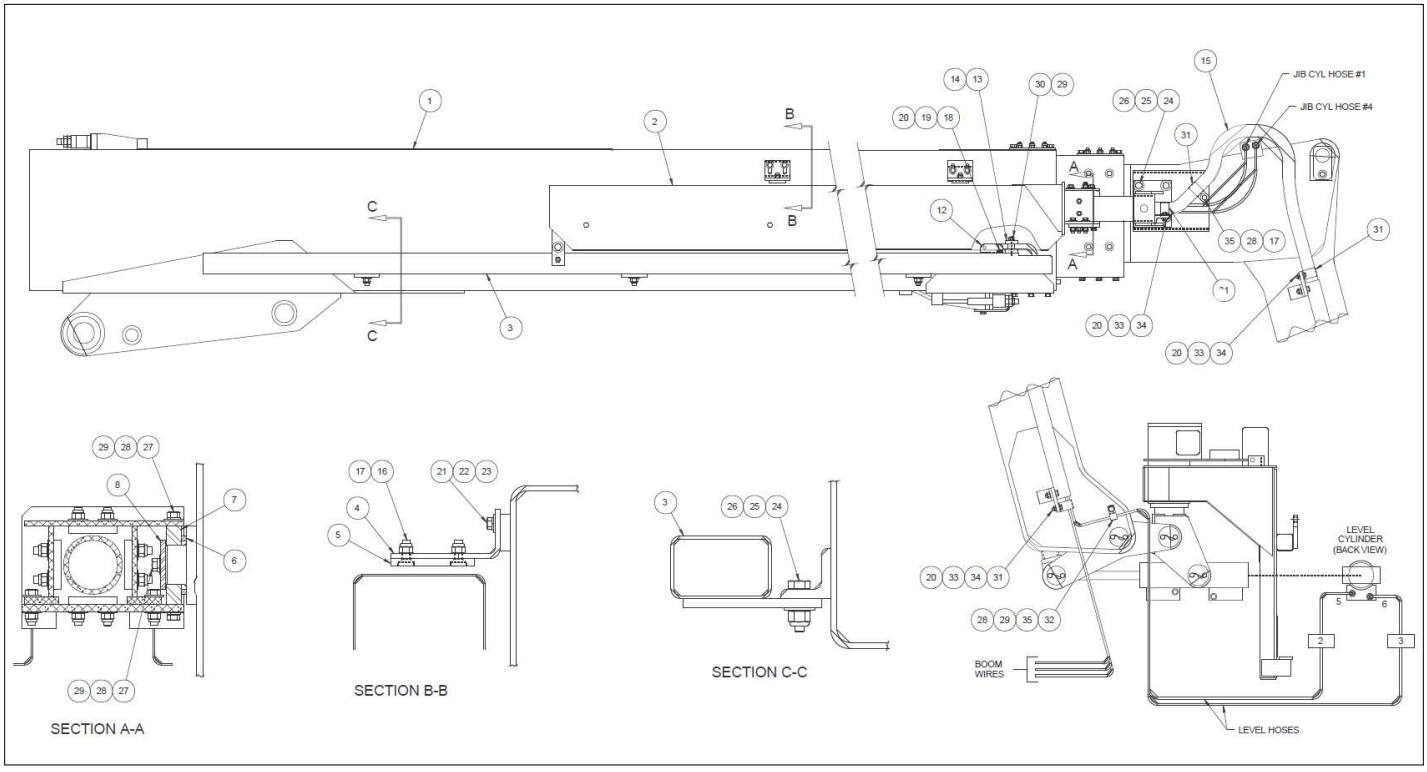

Courtesy of Crane.Market

Item	Part No.	Name	Qty	Uom
Not Shown	81817	BOOMS AND HOSE CARRIER	1	EA
1	81738	BOOMS	1	EA
2	82016	HOSE CARRIER	1	EA
3	80962	HOSE CARRIER SUPPORT TUBE	1	EA
4	72951	GUIDE BAR	2	EA
5	70029	SLIDE PAD	2	EA
6	5560717	BSHG MCHRY 2.25ID 3.25OD .13	2	EA
7	70504	PIN JOINT PLATE	1	EA
8	70506	PIN LOCK	1	EA
9	72015	CLEVIS PIN	1	EA
10	5560014	HAIR PIN (5/8'' DIA)	1	EA
11	81970	TUBE BRACKET	1	EA
12	9920016	HOSE TRACK END	1	EA
13	72937	CLAMP BAR	1	EA
14	110581	SPCR .465ID .500OD .375 STL	2	EA
15	5090034	HOSE GUARD X 102 INCH LONG	1	EA
16	972469	CAPSCREW 3/8-16 X 1 INCH LONG SOCKET FLAT HEAD	4	EA
17	5560033	NUT HEXHD .375-16 LKG	6	EA
18	970029	CAPSCREW 1/4-20 X 3/4 INCH LONG HEX HEAD GRADE 5	2	EA
19	986019	WASHER FLAT .250	2	EA
20	5560004	NUT HEXHD .250-20 LKG	5	EA
21	970259	BOLT HEXHD .313-18 1.00	4	EA
22	986269	WASHER 5/16 MEDIUM FLAT	4	EA
23	987109	WASHER LOCK .313	4	EA
24	970849	BOLT, HEXHD .500-13 1.25 GR5	9	EA
25	986359	WASHER 1/2 MEDIUM FLAT	9	EA

Courtesy of Crane.Market

Item	Part No.	Name	Qty	Uom
26	5560039	NUT LKG .500-13	9	EA
27	970426	BLT HHD .375-16 X .875	6	EA
28	986299	BOLT HEXHD .313-18 2.50 GR. 5	8	EA
29	987119	BOLT HEXHD .375-16 1.75 GR. 5	9	EA
30	970489	CAPSCREW 3/8-16 X 1-1/2 INCH LONG HEX HEAD GRADE 5	3	EA
31	5093010	CUSHION CLAMP #24 (1-1/2")	4	EA
32	5093004	CLAMP	1	EA
33	987099	WASHER LOCK .250	2	EA
34	970049	BOLT HEXHD .250-20 1.00 GR. 5	3	EA
35	970449	CAPSCREW 3/8-16 X 3/4 INCH LONG HEX HEAD GRADE 5	2	EA

Courtesy of Crane.Market

REPAIR PARTS

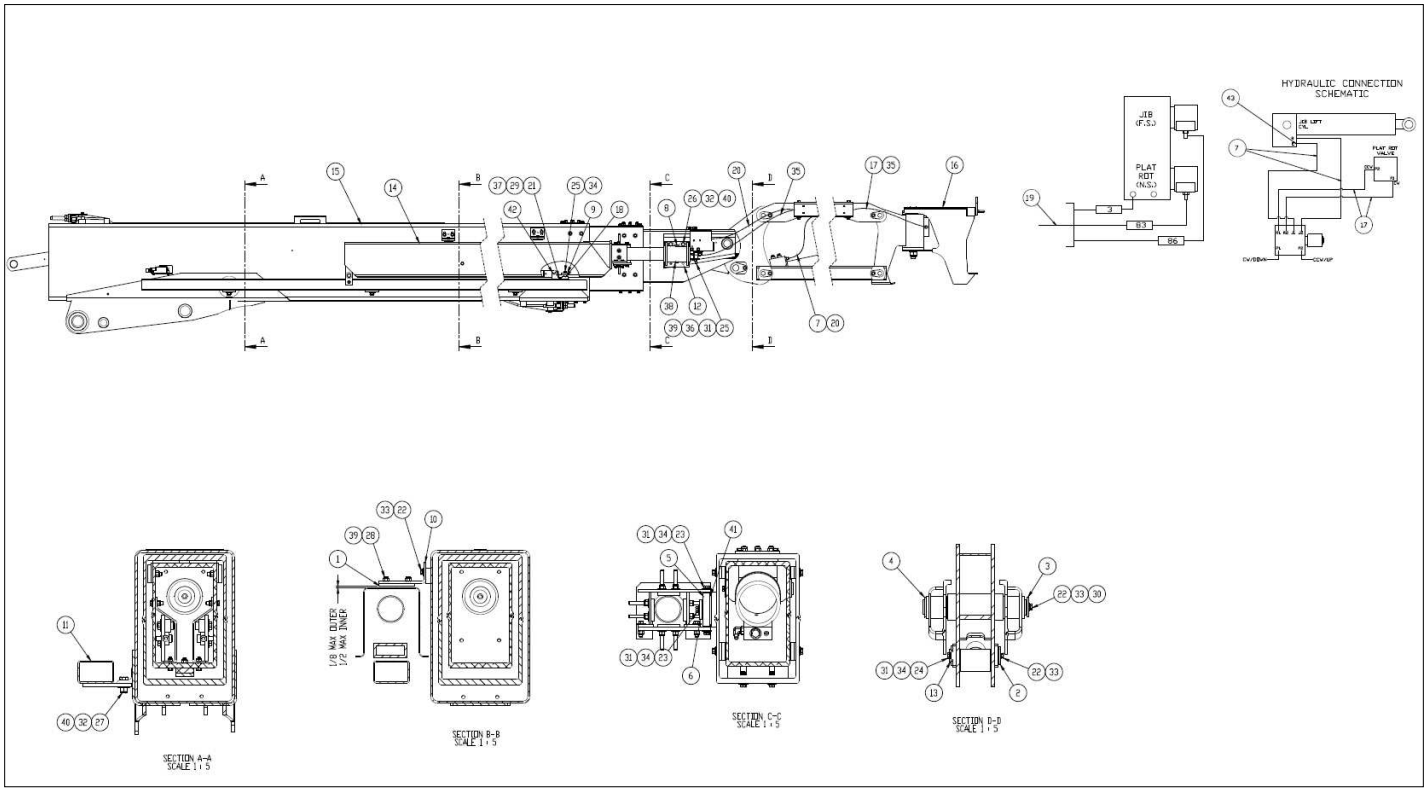

Courtesy of Crane.Market

Item	Part No.	Name	Qty	Uom
Not Shown	0084749	ASSY, BOOM/HOSE CARRIER/ JIB TB66	1	EA
1	0070029	SLIDE PAD	2	EA
2	0070033	PIN LOCK	1	EA
3	0070132	PIN LOCK	1	EA
4	0070446	PIN, PLATFORM TO TIP BOOM	1	EA
5	0070504	PIN JOINT PLATE	1	EA
6	0070506	PIN LOCK	1	EA
7	0070772	HOSE -4-4S-4S 54 100R2	2	EA
8	0072015	CLEVIS PIN (5/8" DIA.)	1	EA
9	0072937	CLAMP BAR	1	EA
10	0072951	GUIDE BAR	2	EA
11	0080962	HOSE CARRIER SUPPORT TUBE	1	EA
12	0082023	TUBE BRACKET	1	EA
13	008441	PIN 1.50 DIA X 5.19 GRIP	1	EA
14	0084750	ASSY HOSE CARRIER TB66J	1	EA
15	0084751	ASSY BOOMS TB66J	1	EA
16	0084752	ASSEMBLY 6FT JIB	1	EA
17	0084765	HOSE-4-4S-4S 115 100R2	2	EA
18	0110581	SPACER	2	EA
19	0084754	WIRE ASSEMBLY PLATFORM/JIB SELECTOR	1	EA
20	563536	SPRIAL HOSE GUARD	REF	EA
21	970029	CAPSCREW 1/4-20 X 3/4 INCH LONG HEX HEAD GRADE 5	2	EA
22	970369	CAPSCREW 5/16-18	8	EA
23	970426	BLT HHD .375-16 X .875	6	EA
24	970469	BOLT HEXHD .375-16 1.00 GR. 5	1	EA
25	970489	CAPSCREW 3/8-16 X 1-1/2 INCH LONG HEX HEAD GRADE 5	3	EA

Courtesy of Crane.Market

Item	Part No.	Name	Qty	Uom
26	970849	BOLT, HEXHD .500-13 1.25 GR5	4	EA
27	970909	BOLT HEXHD .500-13 1.50 GR5	5	EA
28	972469	CAPSCREW 3/8-16 X 1 INCH LONG SOCKET FLAT HEAD	4	EA
29	986019	WASHER FLAT .250	2	EA
30	986269	WASHER 5/16 MEDIUM FLAT	6	EA
31	986299	BOLT HEXHD .313-18 2.50 GR. 5	8	EA
32	986359	WASHER 1/2 MEDIUM FLAT	9	EA
33	987109	WASHER LOCK .313	8	EA
34	987119	BOLT HEXHD .375-16 1.75 GR. 5	9	EA
35	5090034	HOSE GUARD X 102 INCH LONG	REF	EA
36	5093009	CLAMP	1	EA
37	5560004	NUT HEXHD .250-20 LKG	2	EA
38	5560014	HAIR PIN (5/8'' DIA)	1	EA
39	5560033	NUT HEXHD .375-16 LKG	5	EA
40	5560039	NUT LKG .500-13	9	EA
41	5560717	BSHG MCHRY 2.25ID 3.25OD .13	1	EA
42	9920016	HOSE TRACK END	1	EA
43	0151918	ORIFICE .035	1	EA

Courtesy of Crane.Market

REPAIR PARTS

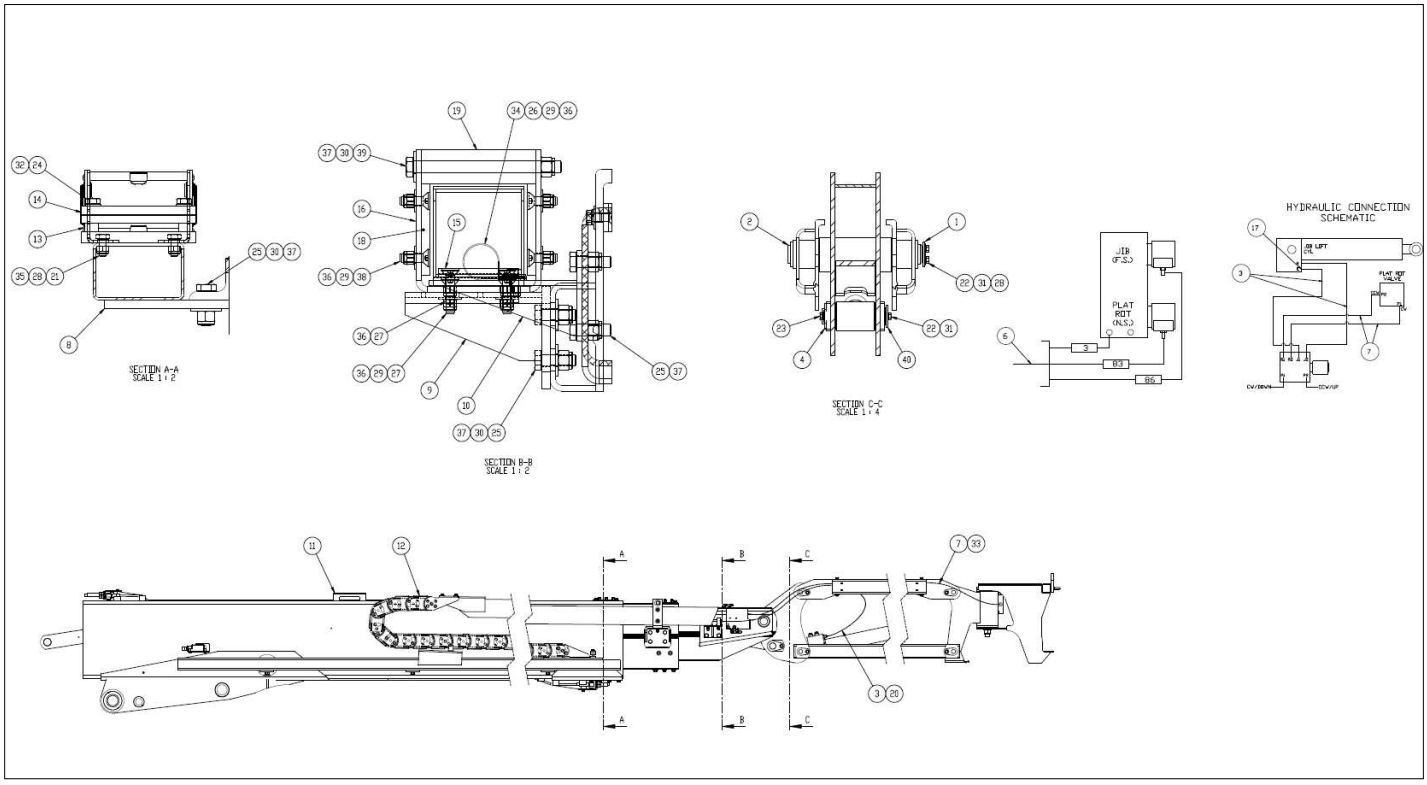

Courtesy of Crane.Market

Item	Part No.	Name	Qty	Uom
1	0070132	PIN LOCK	1	EA
2	0070446	PIN, PLATFORM TO TIP BOOM	1	EA
3	0070772	HOSE -4-4S-4S 54 100R2	2	EA
4	0084741	PIN 1.50 DIA X 5.19 GRIP	1	EA
5	0084752	ASSEMBLY 6FT JIB	1	EA
6	0084754	WIRE ASSEMBLY PLATFORM/JIB SELECTOR	1	EA
7	0084765	HOSE-4-4S-4S 115 100R2	2	EA
8	0084781	WELDMENT SUPPORT TUBE	1	EA
9	0084786	WELDMENT SUPPORT PLATE	1	EA
10	0084792	WELDMENT CABLE SUPPORT	1	EA
11	0084793	ASSY BOOMS TB66J	1	EA
12	0084794	ASSY HOSE CARRIER	1	EA
13	0110581	SPACER	2	EA
14	0110590	TUBE CLAMP, UPPER	1	EA
15	0113592	SL PAD 2.00 3.50 .375 2H	1	EA
16	0113607	PLT TUBE GUIDE	1	EA
17	0151918	ORIFICE .035	1	EA
18	0161766	SLIDE PAD 2.0 X 4.0 X .38	3	EA
19	0170045	SLIDE PAD	1	EA
20	563536	SPRIAL HOSE GUARD	36	EA
21	970239	BOLT HEXHD .313-18 .75 GR. 5	4	EA
22	970369	CAPSCREW 5/16-18	4	EA
23	970469	BOLT HEXHD .375-16 1.00 GR. 5	1	EA
24	970489	CAPSCREW 3/8-16 X 1-1/2 INCH LONG HEX HEAD GRADE 5	2	EA
25	970909	BOLT HEXHD .500-13 1.50 GR5	13	EA
26	972479	BLT HEXHD .375-16 1.25 GR5	1	EA
27	972489	3/8-16NC 1 1/2 LARGE FLAT SOCKET HD	4	EA

Courtesy of Crane.Market

Item	Part No.	Name	Qty	Uom
28	986269	WASHER 5/16 MEDIUM FLAT	6	EA
29	986299	BOLT HEXHD .313-18 2.50 GR. 5	8	EA
30	986359	WASHER 1/2 MEDIUM FLAT	10	EA
31	987109	WASHER LOCK .313	4	EA
32	987119	BOLT HEXHD .375-16 1.75 GR. 5	3	EA
33	5090034	HOSE GUARD X 102 INCH LONG	9.5	EA
34	5093010	CUSHION CLAMP #24 (1-1/2")	1	EA
35	5560031	NUT HEX LKG .313-18	4	EA
36	5560033	NUT HEXHD .375-16 LKG	9	EA
37	5560039	NUT LKG .500-13	14	EA
38	5560675	CAPSCREW, 3/8-16 X 1 1/4 LG. FLAT SOC. HD. PLATED	4	EA
39	5569900	CAPSCREW 1/2-13 X 6-1/2 INCH LONG HEX HEAD GRADE 5	1	EA
40	0070033	PIN LOCK	1	EA

Courtesy of Crane.Market

REPAIR PARTS

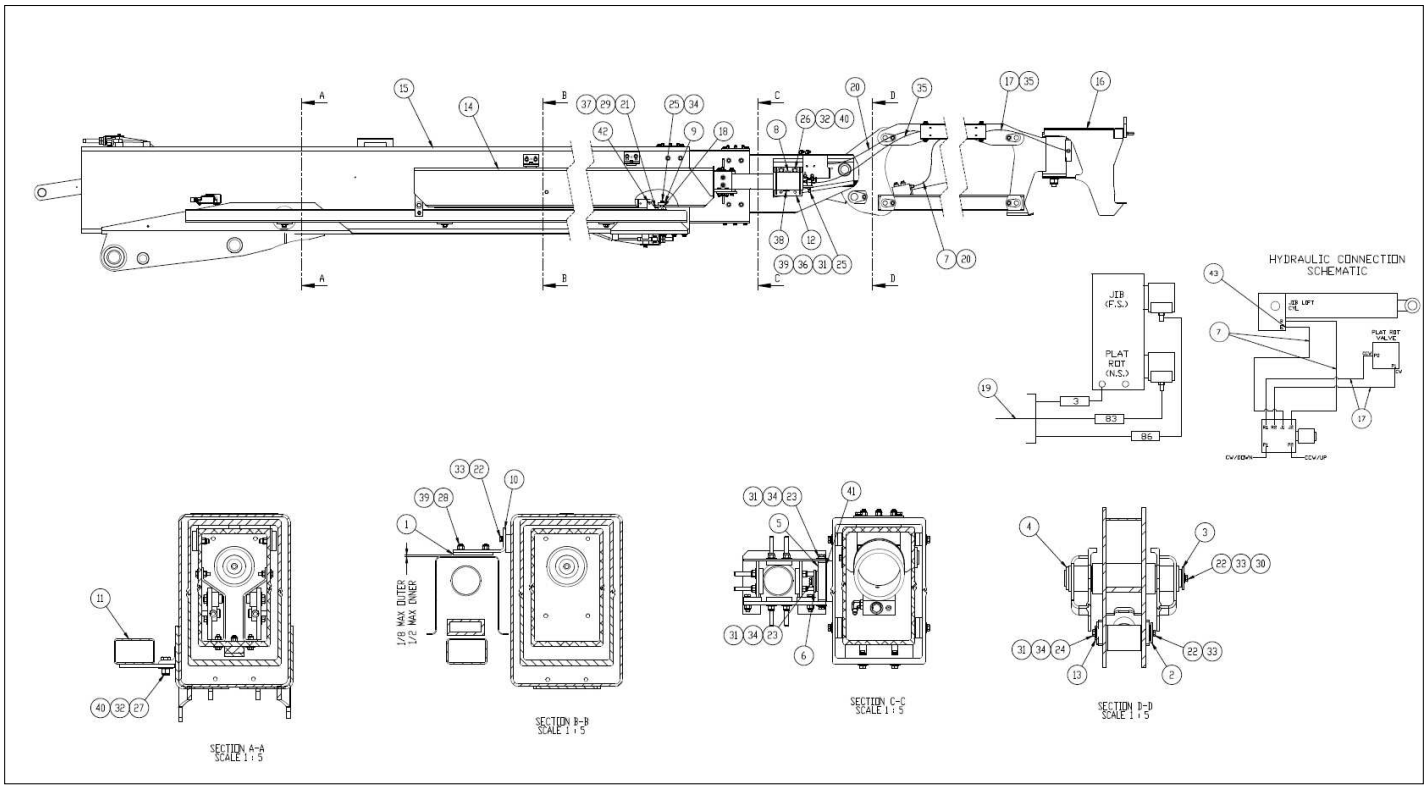

Courtesy of Crane.Market

Item	Part No.	Name	Qty	Uom
Not Shown	0084770	ASSY BOOM/HOSE/JIB TB66J CE	1	EA
1	0070029	SLIDE PAD	2	EA
2	0070033	PIN LOCK	1	EA
3	0070132	PIN LOCK	1	EA
4	0070446	PIN, PLATFORM TO TIP BOOM	1	EA
5	0070504	PIN JOINT PLATE	1	EA
6	0070506	PIN LOCK	1	EA
7	0070772	HOSE -4-4S-4S 54 100R2	2	EA
8	0072015	CLEVIS PIN (5/8" DIA.)	1	EA
9	0072937	CLAMP BAR	1	EA
10	0072951	GUIDE BAR	2	EA
11	0080962	HOSE CARRIER SUPPORT TUBE	1	EA
12	0082023	TUBE BRACKET	1	EA
13	0084741	PIN 1.50 DIA X 5.19 GRIP	1	EA
14	0084750	ASSY HOSE CARRIER TB66J	1	EA
15	0084751	ASSY BOOMS TB66J	1	EA
16	0084771	ASSY 6FT JIB CE	1	EA
17	0084765	HOSE-4-4S-4S 115 100R2	2	EA
18	0110581	SPACER	2	EA
19	0084754	WIRE ASSEMBLY PLATFORM/JIB SELECTOR	1	EA
20	563536	SPRIAL HOSE GUARD	REF	EA
21	970029	CAPSCREW 1/4-20 X 3/4 INCH LONG HEX HEAD GRADE 5	2	EA
22	970369	CAPSCREW 5/16-18	8	EA
23	970426	BLT HHD .375-16 X .875	6	EA
24	970469	BOLT HEXHD .375-16 1.00 GR. 5	1	EA
25	970489	CAPSCREW 3/8-16 X 1-1/2 INCH LONG HEX HEAD GRADE 5	3	EA

Courtesy of Crane.Market

Item	Part No.	Name	Qty	Uom
26	970849	BOLT, HEXHD .500-13 1.25 GR5	4	EA
27	970909	BOLT HEXHD .500-13 1.50 GR5	5	EA
28	972469	CAPSCREW 3/8-16 X 1 INCH LONG SOCKET FLAT HEAD	4	EA
29	986019	WASHER FLAT .250	2	EA
30	986269	WASHER 5/16 MEDIUM FLAT	6	EA
31	986299	BOLT HEXHD .313-18 2.50 GR. 5	8	EA
32	986359	WASHER 1/2 MEDIUM FLAT	9	EA
33	987109	WASHER LOCK .313	8	EA
34	987119	BOLT HEXHD .375-16 1.75 GR. 5	9	EA
35	5090034	HOSE GUARD X 102 INCH LONG	REF	EA
36	5093009	CLAMP	1	EA
37	5660004	.250-20 UNC HEX LOCK NUT	2	EA
38	5660014	PIN HAIRPIN CLIP .625	1	EA
39	5560033	NUT HEXHD .375-16 LKG	5	EA
40	5560039	NUT LKG .500-13	9	EA
41	5560717	BSHG MCHRY 2.25ID 3.25OD .13	1	EA
42	9920016	HOSE TRACK END	1	EA
43	0151918	ORIFICE .035	1	EA

Courtesy of Crane.Market

REPAIR PARTS

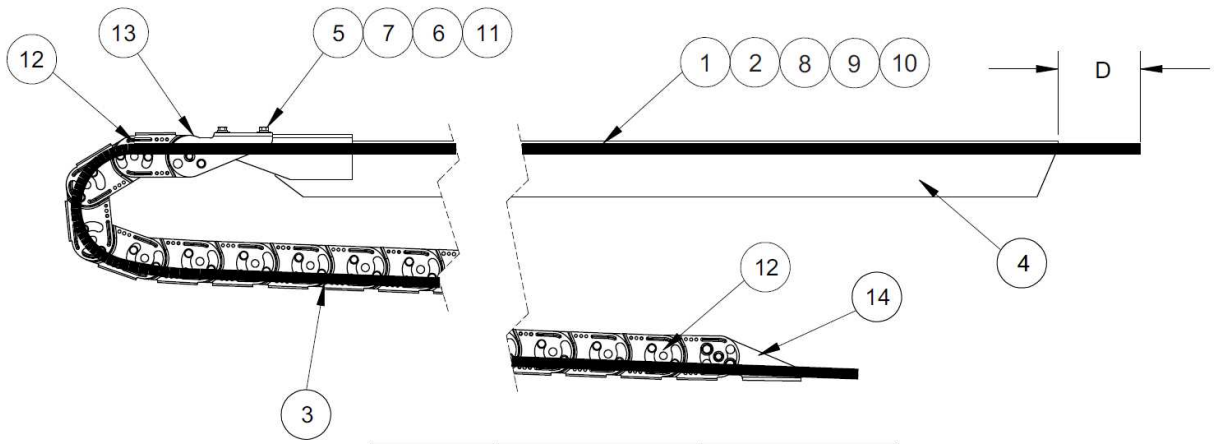

ITEM NO.	"D" LENGTH (in)	NOTES
1	13	LABEL #2 AND #3
2	19	LABEL #1 AND #4
8, 9, 10	265	

Courtesy of Crane.Market

Item	Part No.	Name	Qty	Uom
1	0084282	HOSE -4-4S-4S 739 100R17	2	EA
2	0084283	HOSE -4-4S-4S 754 100R17	2	EA
3	0084695	CAT TRACK STEEL – 53 LINKS	1	EA
Not Shown	8210262	STEEL HOSE CARRIER INSPECTION/REPAIR	1	EA
Not Shown	0113641	STEEL CAT TRACK REPLACEMENT LINK	1	EA
Not Shown	IP8210262	STEEL HOSE CARRIER INSPECTION/REPAIR INSTALLATION PROCEDURE	1	EA
4	0084782	WELDMENT SUPPORT TUBE	1	EA
5	970449	CAPSCREW 3/8-16 X 3/4 INCH LONG HEX HEAD GRADE 5	4	EA
6	986299	BOLT HEXHD .313-18 2.50 GR. 5	4	EA
7	987119	BOLT HEXHD .375-16 1.75 GR. 5	4	EA
8	3010005	CONTROL WIRE #2, 18 GAUGE/19 CONDUCTOR X 87 FEET LONG - (TERMINALS NOT INCLUDED)	87	EA
9	3010006	POWER WIRE, 12 GAUGE/8 CONDUCTOR X 87 FEET LONG (TERMINALS NOT INCLUDED)	87	EA
10	3010009	CABLE 18GA / 12 COND	87	EA
11	5560126	THREAD INSERT .375-16 .375 LKG	4	EA
12	0110581	SPACER	2	EA
13	6091708	FIXED END BRACKET	1	EA
14	6091709	MOVING END BRACKET	1	EA

Courtesy of Crane.Market

REPAIR PARTS

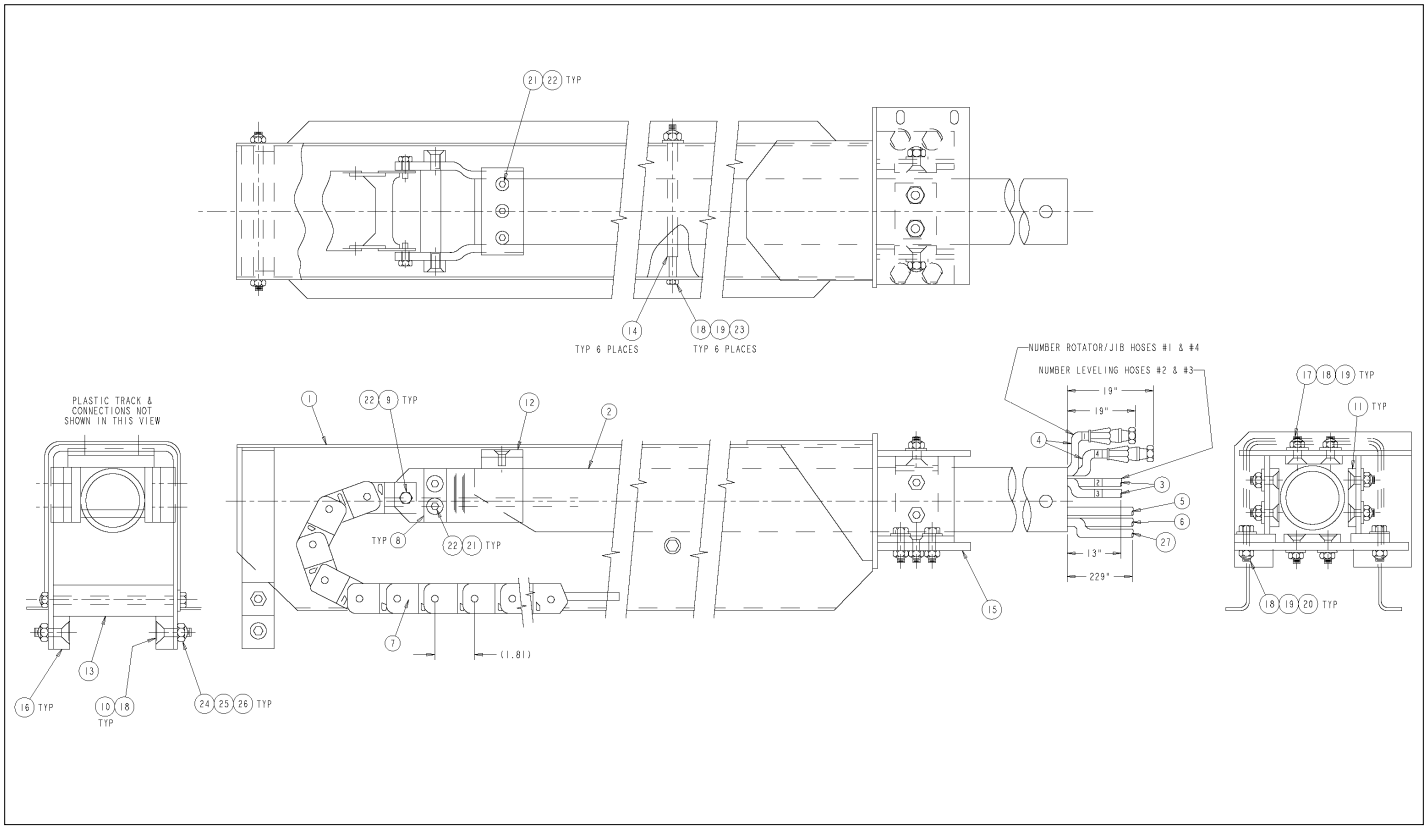

Courtesy of Crane.Market

Item	Part No.	Name	Qty	Uom
1	0072743	HOSE CARRIER	1	EA
2	0072737	CARRIER TUBE	1	EA
3	0084282	HOSE -4-4S-4S 739 100R17	2	EA
4	0084283	HOSE -4-4S-4S 754 100R17	2	EA
5	3010006	POWER WIRE, 12 GAUGE/8 CONDUCTOR X 87 FEET LONG (TERMINALS NOT INCLUDED)	84 FT	EA
6	3010009	CABLE 18GA / 12 COND	84 FT	EA
7	9920014	PLASTIC TRACK LINK	111	EA
8	0072934	SLIDE PAD 1.25 2.50 .50 2H	2	EA
9	0072910	CAPSCREW, SPECIAL	2	EA
10	972489	3/8-16NC 1 1/2 LARGE FLAT SOCKET HD	2	EA
11	0100105	SLIDE PAD	4	EA
12	0070029	SLIDE PAD	1	EA
13	0072936	SLIDE PAD	1	EA
14	0080284	SPACER	6	EA
15	0110610	ANCHOR PLATE, BOTTOM	1	EA
16	0072935	SLIDE PAD	2	EA
17	5560675	CAPSCREW, 3/8-16 X 1 1/4 LG. FLAT SOC. HD. PLATED	8	EA
18	5560033	NUT HEXHD .375-16 LKG	20	EA
19	986299	BOLT HEXHD .313-18 2.50 GR. 5	28	EA
20	970489	CAPSCREW 3/8-16 X 1-1/2 INCH LONG HEX HEAD GRADE 5	4	EA
21	972449	CAPSCREW 3/8-16 X 3/4 INCH LONG SOCKET FLAT HEAD	7	EA
22	5560126	THREAD INSERT .375-16 .375 LKG	9	EA
23	5560605	CAPSCREW 3/8-16 X 7 INCH LONG HEX HEAD GRADE 5	6	EA
24	5560606	CAPSCREW 1/2-13 X 7 INCH LONG HEX HEAD GRADE 5	1	EA

Courtesy of Crane.Market

Item	Part No.	Name	Qty	Uom
25	986359	WASHER 1/2 MEDIUM FLAT	2	EA
26	5560039	NUT LKG .500-13	1	EA
27	3010005	CONTROL WIRE #2, 18 GAUGE/19 CONDUCTOR X 87 FEET LONG - (TERMINALS NOT INCLUDED)	84 FT	EA

Courtesy of Crane.Market

REPAIR PARTS

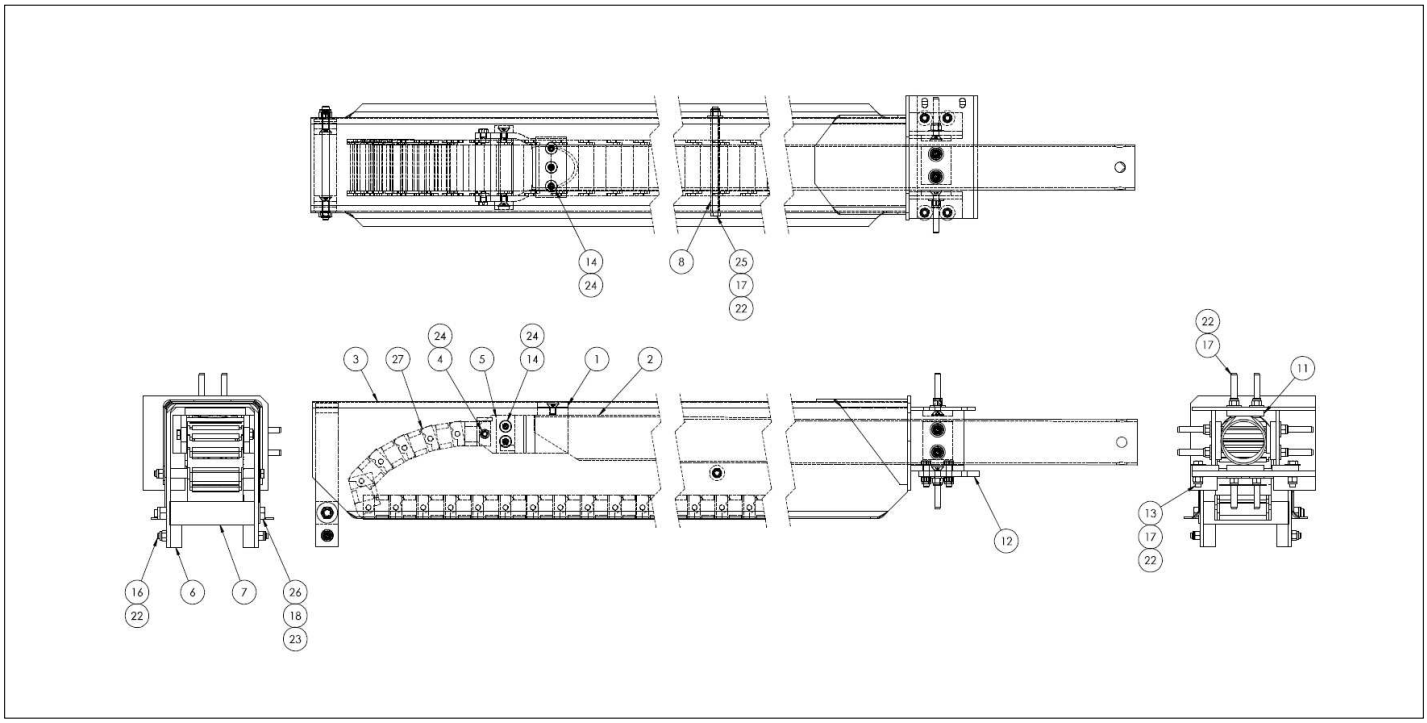

Courtesy of Crane.Market

Item	Part No.	Name	Qty	Uom
1	0070029	SLIDE PAD	1	EA
2	0072737	CARRIER TUBE	1	EA
3	0072743	HOSE CARRIER	1	EA
4	0072910	CAPSCREW, SPECIAL	2	EA
5	0072934	SLIDE PAD 1.25 2.50 .50 2H	2	EA
6	0072935	SLIDE PAD	2	EA
7	0072936	SLIDE PAD	1	EA
8	0080284	SPACER	6	EA
9	0084282	HOSE -4-4S-4S 739 100R17	2	EA
10	0084283	HOSE -4-4S-4S 754 100R17	2	EA
11	0100105	SLIDE PAD	4	EA
12	0110610	ANCHOR PLATE, BOTTOM	1	EA
13	970489	CAPSCREW 3/8-16 X 1-1/2 INCH LONG HEX HEAD GRADE 5	4	EA
14	972449	CAPSCREW 3/8-16 X 3/4 INCH LONG SOCKET FLAT HEAD	7	EA
15	972539	FLSKTHD .375 X 2.75 ZINC PLTD	8	EA
16	972489	3/8-16NC 1 1/2 LARGE FLAT SOCKET HD	2	EA
17	986299	BOLT HEXHD .313-18 2.50 GR. 5	18	EA
18	986359	WASHER 1/2 MEDIUM FLAT	1	EA
19	3010005	CONTROL WIRE #2, 18 GAUGE/19 CONDUCTOR X 87 FEET LONG - (TERMINALS NOT INCLUDED)	87 FT	EA
20	3010006	POWER WIRE, 12 GAUGE/8 CONDUCTOR X 87 FEET LONG (TERMINALS NOT INCLUDED)	87 FT	EA
21	3010009	CABLE 18GA / 12 COND	87 FT	EA
22	5560033	NUT HEXHD .375-16 LKG	20	EA
23	5560039	NUT LKG .500-13	1	EA

Courtesy of Crane.Market

Item	Part No.	Name	Qty	Uom
24	5560126	THREAD INSERT .375-16 .375 LKG	9	EA
25	5560605	CAPSCREW 3/8-16 X 7 INCH LONG HEX HEAD GRADE 5	6	EA
26	5560605	CAPSCREW 3/8-16 X 7 INCH LONG HEX HEAD GRADE 5	1	EA
27	9920014	PLASTIC TRACK LINK	111	EA

Courtesy of Crane.Market

REPAIR PARTS

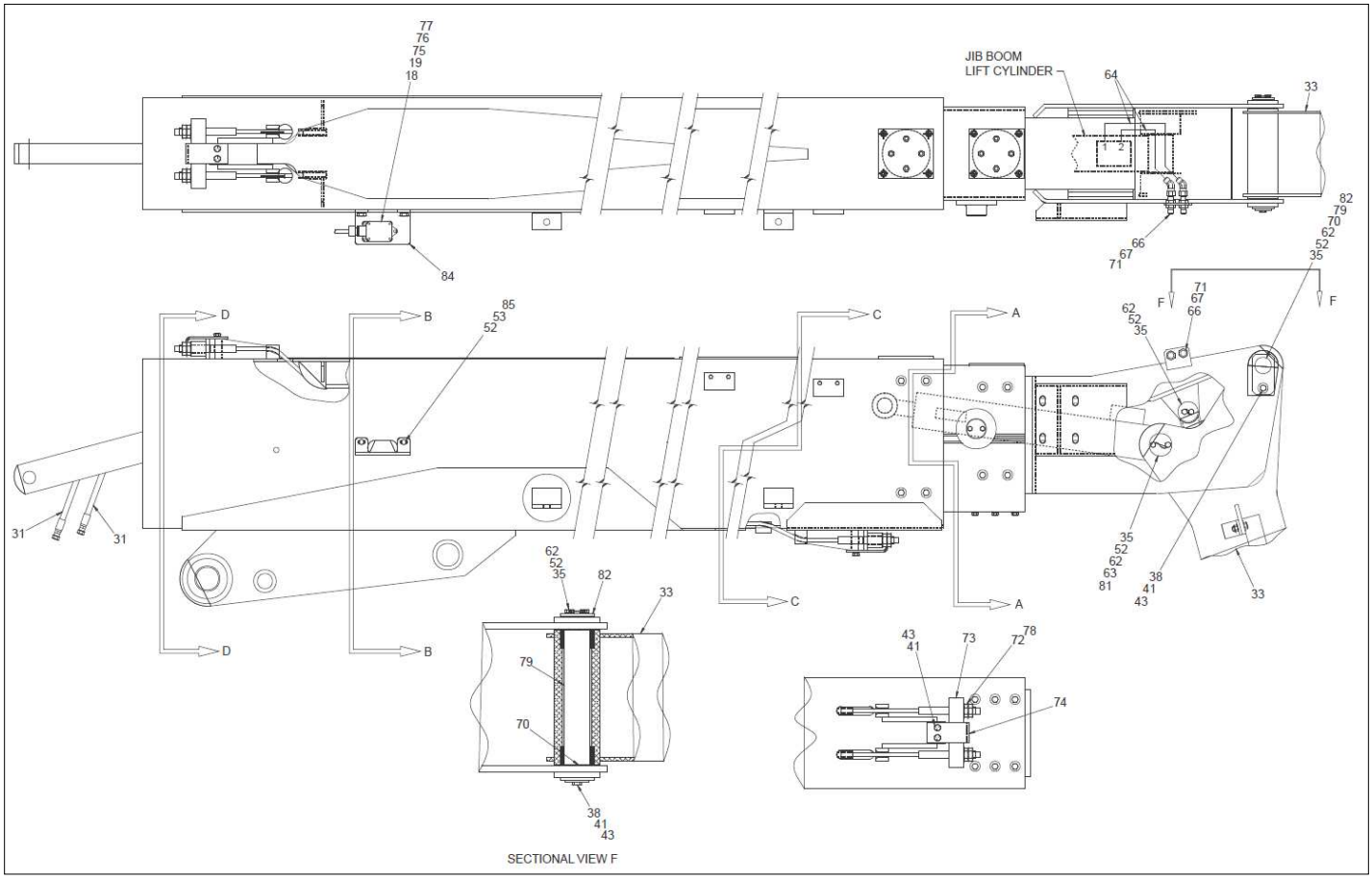

Courtesy of Crane.Market

Item	Part No.	Name	Qty	Uom
Not Shown	0081738	BOOMS, COMPLETE	1	EA
1	0081782	BASE BOOM WELDMENT	1	EA
2	0081720	INTERMEDIATE BOOM WELDMENT	1	EA
3	0081719	TIP BOOM	1	EA
4	0081745	EXTENSION CYLINDER ASSY	1	EA
5	0081730	WIRE ROP ASSY-RETRACT 3/8 DIA	2	EA
6	0070442	WLDMT PIN 1.50 5.875 GRIP	1	EA
7	0081776	CABLE SHEAVE	2	EA
8	0081749	WELDMENT SHEAVE CAGE	2	EA
9	0081759	WELDMENT PIN 1.50 9.313 GRIP	1	EA
10	0082149	PAD PLATE, BASE BOOM	1	EA
11	0081940	PAD PLATE, INTERMEDIATE BOOM	1	EA
12	0081752	WELDMENT WIRE ROPE ANCHOR	2	EA
13	0081942	SLIDE PAD	1	EA
14	0081941	SLIDE PAD	1	EA
15	0072681	SLIDE PAD MOUNT	2	EA
16	0072682	SLIDE PAD	1	EA
17	0073111	SLIDE PAD SPACER	1	EA
18	0081975	BOOM SWITCH ASSY SWITCH ONLY	1	EA
19	0071216	GUARD	1	EA
20	0070448	PIN 0.50 9.500 GRIP	1	EA
21	988179	COTTER PIN 1/8 INCH DIAMETER X 1 INCH LONG (SWINGING GATE FOR 5 STEEL PLATFORMS)	2	EA
22	0072751	CYL. ANCHOR	2	EA
23	0070390	PIN 1.75 X 1.875 GRIP	2	EA

Courtesy of Crane.Market

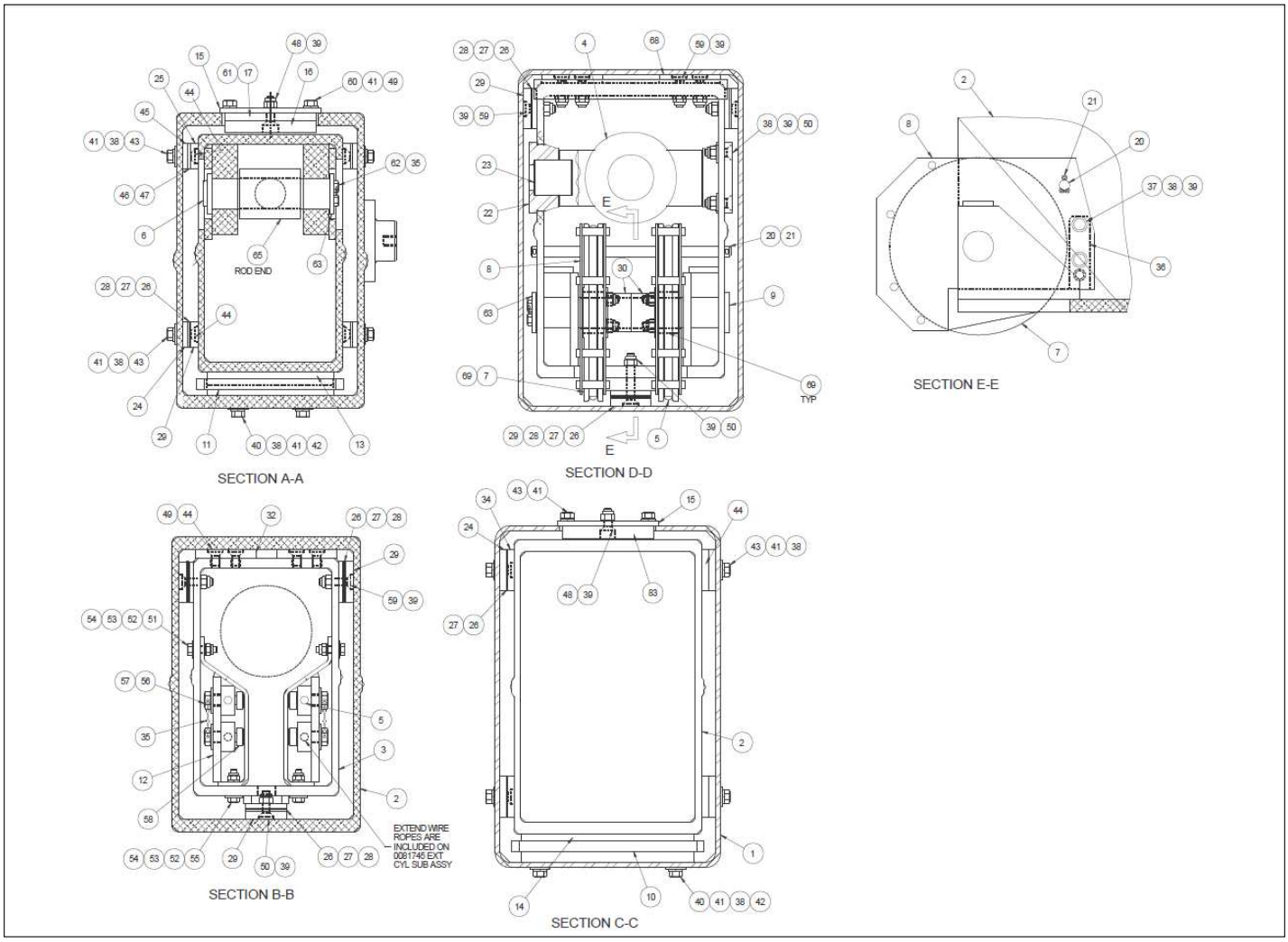

Courtesy of Crane.Market

Item	Part No.	Name	Qty	Uom
24	0070486	SPACER - SLIDE PAD	6	EA
25	0080294	SLIDE PAD	2	EA
26	0070030	SHIM-SLIDE PAD (.030)	8	EA
27	0072567	SHIM-SLIDE PAD (.063)	8	EA
28	0090141	SHIM-SLIDE PAD (.090)	4	EA
29	0080293	SLIDE PAD	12	EA
30	2500046	BRG 1.50 ID 2.00 OD 1.25	2	EA
31	0100422	3/8 INCH HYDRAULIC HOSE	2	EA
32	0070639	SLIDE PAD	2	EA
33	0181221	JIB BOOM	1	EA
34	0070031	SLIDE PAD	4	EA
35	9980012	.040 INCH DIAMETER STAINLESS STEEL SAFETY LOCKWIRE -(SOLD IN ONE POUND CAN)	1	EA
36	0074639	SLIDE PAD 3/8 CABLE SHEAVE	2	EA
37	972509	3/8-16NC X 2 LG FLAT SOCKET HD	6	EA
38	986299	BOLT HEXHD .313-18 2.50 GR. 5	41	EA
39	5560033	NUT HEXHD .375-16 LKG	18	EA
40	970469	BOLT HEXHD .375-16 1.00 GR. 5	6	EA
41	987119	BOLT HEXHD .375-16 1.75 GR. 5	41	EA
42	5560015	THREAD INSERT 3/8-16	12	EA
43	970449	CAPSCREW 3/8-16 X 3/4 INCH LONG HEX HEAD GRADE 5	21	EA
44	5560679	CAPSCREW 3/8-16 X 5/8 INCH LONG SOCKET FLAT HEAD	22	EA
45	0073340	SPACER - SLIDE PAD	2	EA
46	0073342	SHIM-SLIDE PAD (.063)	4	EA
47	0073343	SHIM-SLIDE PAD (.090)	4	EA

Courtesy of Crane.Market

Item	Part No.	Name	Qty	Uom
48	972469	CAPSCREW 3/8-16 X 1 INCH LONG SOCKET FLAT HEAD	4	EA
49	5560126	THREAD INSERT .375-16 .375 LKG	14	EA
50	5560644	M.SCR, 3/8-16 1-1/4 F.H. SOC. CAD	7	EA
51	970259	BOLT HEXHD .313-18 1.00	8	EA
52	987109	WASHER LOCK .313	22	EA
53	986269	WASHER 5/16 MEDIUM FLAT	10	EA
54	5560031	NUT HEX LKG .313-18	12	EA
55	970269	BOLT .313-18 1.25 GR. 5	4	EA
56	986359	WASHER 1/2 MEDIUM FLAT	4	EA
57	5560053	HEX JAM NUT, DRILLED	4	EA
58	5560005	ANCHOR BOLT	4	EA
59	978409	M.SCR, 3/8-16 1-1/2 F.H. SOC. CAD	22	EA
60	972449	CAPSCREW 3/8-16 X 3/4 INCH LONG SOCKET FLAT HEAD	12	EA
61	0072683	SPACER (NOTE 3)	1	EA
62	0070473	CAPSCREW 5/16-18 DRILLED HEAD	10	EA
63	0070033	PIN LOCK	4	EA
64	0020267	HOSE ASSEMBLY 3/8" I.D.	2	EA
65	0082019	JIB BOOM LIFT CYLINDER	1	EA
66	5034403	BULKHEAD UNION	2	EA
67	5074403	FTG LKNT BHD-6 STL	2	EA
68	0081953	SL PAD 3.00 8.00 .375 7H	2	EA
69	2500047	BRG 1.5 ID X 2.00 OD .875	2	EA
70	5569853	MACHINE BUSHING 3-1/4 INCH OD X 1-3/4 INCH ID X 14 GAUGE THICK	1	EA
71	5036905	FTG ELB45SWVL-6S-6S STL	2	EA
72	5560257	WASHER SET SPHER .75	4	EA

Courtesy of Crane.Market

Item	Part No.	Name	Qty	Uom
73	0081774	WELDMENT SWIVEL ANCHOR	2	EA
74	302363	BRKT	2	EA
75	5560649	M.SCREW, #10-24 X 1" LG. TRUSS HEAD	3	EA
76	986009	FLAT WASHER #10	3	EA
77	984049	NUT, #10-24 HEX	3	EA
78	984469	NUT, 3/4-10 HEX JAM	8	EA
79	0181264	PIN	1	EA
80	0150685	PIN	1	EA
81	0180612	PIN	1	EA
82	0070132	PIN LOCK	1	EA
83	0030214	SL PAD 4.50 OD 3.00 ID .375 5H SP	1	EA
84	0083744	SWITCH BRACKET	1	EA
85	970239	BOLT HEXHD .313-18 .75 GR. 5	2	EA

Courtesy of Crane.Market

REPAIR PARTS

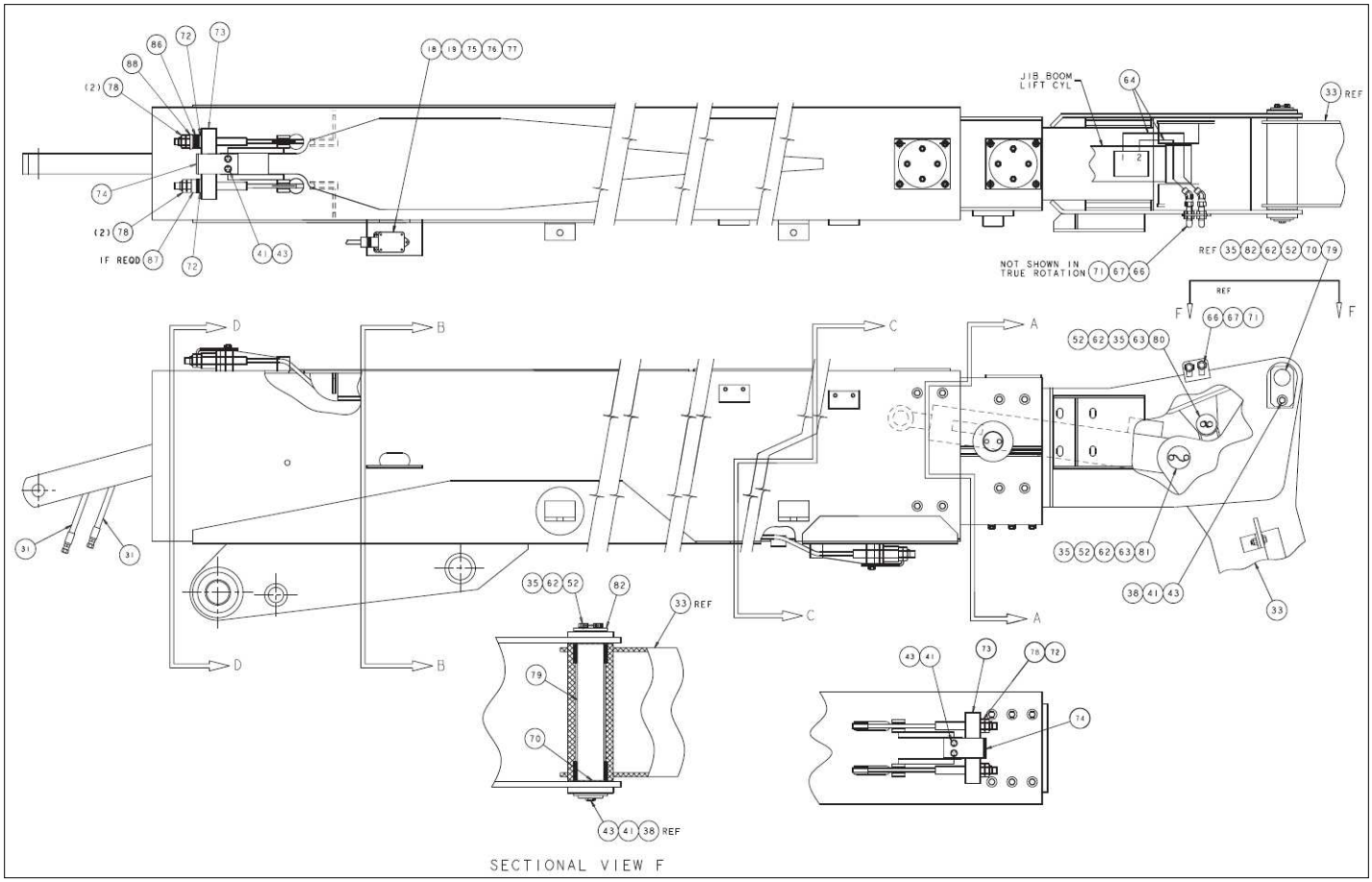

Courtesy of Crane.Market

Item	Part No.	Name	Qty	Uom
1	0081782	BASE BOOM WELDMENT	1	EA
2	0081720	INTERMEDIATE BOOM WELDMENT	1	EA
3	0081719	TIP BOOM	1	EA
4	0081745	EXTENSION CYLINDER ASSY	1	EA
5	0081730	WIRE ROP ASSY-RETRACT 3/8 DIA	2	EA
6	0070442	WLDMT PIN 1.50 5.875 GRIP	1	EA
7	0081776	CABLE SHEAVE	2	EA
8	0081749	WELDMENT SHEAVE CAGE	2	EA
9	0081759	WELDMENT PIN 1.50 9.313 GRIP	1	EA
10	0082149	PAD PLATE, BASE BOOM	1	EA
11	0081940	PAD PLATE, INTERMEDIATE BOOM	1	EA
12	0081752	WELDMENT WIRE ROPE ANCHOR	2	EA
13	0081942	SLIDE PAD	1	EA
14	0081941	SLIDE PAD	1	EA
15	0072681	SLIDE PAD MOUNT	2	EA
16	0072682	SLIDE PAD	1	EA
17	0073111	SLIDE PAD SPACER	1	EA
18	0081975	BOOM SWITCH ASSY SWITCH ONLY	1	EA
19	0071216	GUARD	1	EA
20	0070448	PIN 0.50 9.500 GRIP	1	EA
21	PNNA	COTTER PIN 1/8" X 1" LG	2	EA
22	0072751	CYL. ANCHOR	2	EA
23	0070390	PIN 1.75 X 1.875 GRIP	2	EA
24	0070486	SPACER - SLIDE PAD	6	EA
25	0080294	SLIDE PAD	2	EA
26	0070030	SHIM-SLIDE PAD (.030)	8	EA

Courtesy of Crane.Market

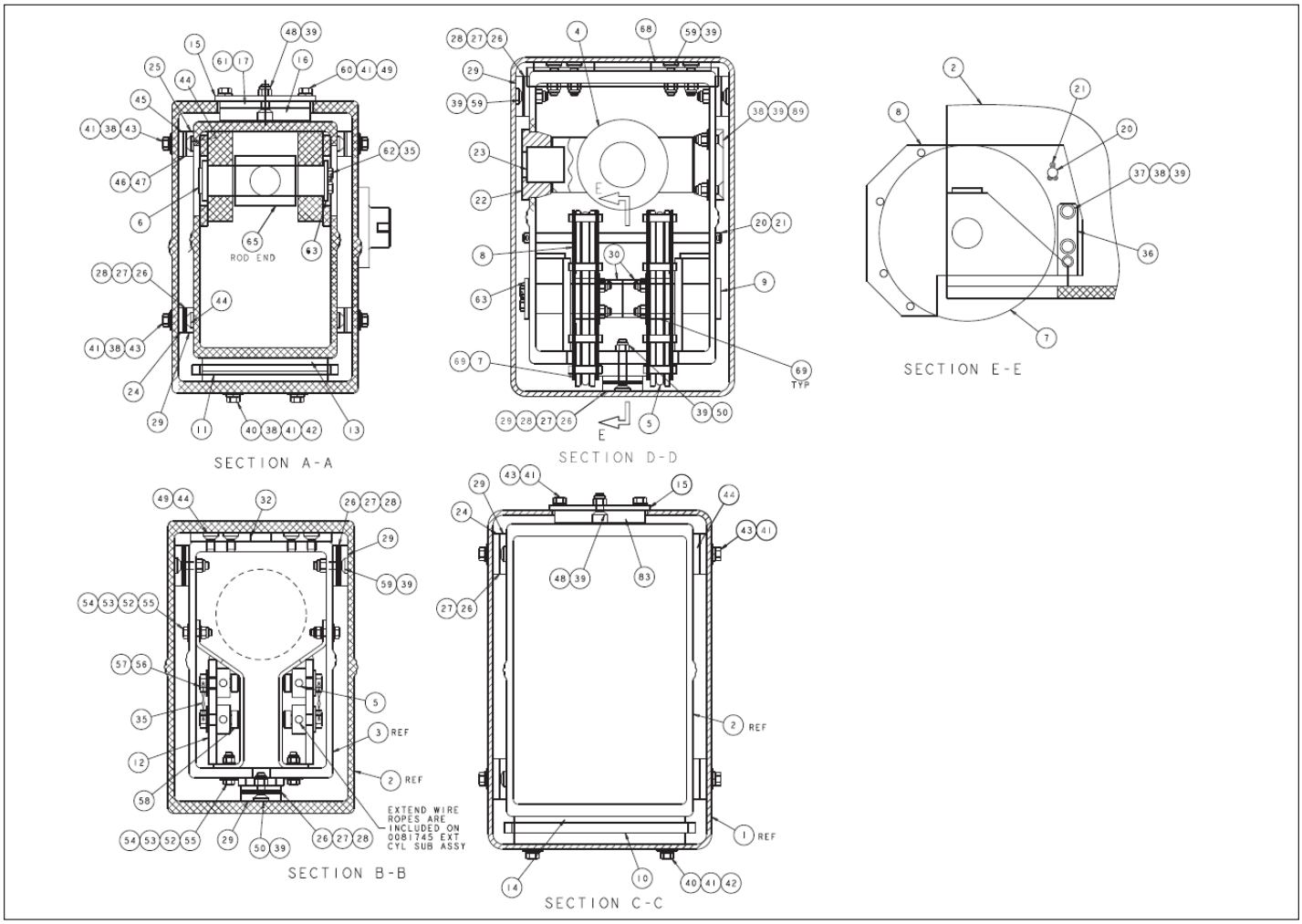

Courtesy of Crane.Market

Item	Part No.	Name	Qty	Uom
27	0072567	SHIM-SLIDE PAD (.063)	8	EA
28	0090141	SHIM-SLIDE PAD (.090)	4	EA
29	0080293	SLIDE PAD	12	EA
30	2500046	BRG 1.50 ID 2.00 OD 1.25	2	EA
31	0100422	3/8 INCH HYDRAULIC HOSE	2	EA
32	0070639	SLIDE PAD	2	EA
33	0181221	JIB BOOM	1	EA
35	9980012	.040 INCH DIAMETER STAINLESS STEEL SAFETY LOCKWIRE -(SOLD IN ONE POUND CAN)	1	EA
36	0074639	SLIDE PAD 3/8 CABLE SHEAVE	2	EA
37	PNNA	BLT FLSHT .375-16 2.00 PLTD	6	EA
38	PNNA	WASHER, 3/8 FLAT	35	EA
39	PNNA	NUT, 3/8-16 ESNA	18	EA
40	PNNA	CAPSCREW, 3/8-16 X 1" LG. HEX HD. GR5	6	EA
41	PNNA	WASHER, 3/8 MEDIUM LOCK	41	EA
42	5560015	THREAD INSERT 3/8-16	12	EA
43	970448	CAPSCREW, 3/8-16 X 3/4 LG. HEX HD. GR5	21	EA
44	PNNA	CAPSCREW, 3/8-16 X 5/8" LG SKT FLAT HEAD CAD PLATED	22	EA
45	0073340	SPACER - SLIDE PAD	2	EA
46	0073342	SHIM-SLIDE PAD (.063)	4	EA
47	0073343	SHIM-SLIDE PAD (.090)	4	EA
48	PNNA	CAPSCREW, 3/8-16 X 1" LG SKT FLAT HEAD CAD PLATED	4	EA
49	5560126	THREAD INSERT .375-16 .375 LKG	14	EA
50	PNNA	CAPSCREW, 3/8-16 X 1-1/4 LG SKT FLAT HD CAD PLATED	2	EA
51	PNNA	CAPSCREW, 5/16-18	4	EA

Courtesy of Crane.Market

Item	Part No.	Name	Qty	Uom
52	PNNA	WASHER, 5/16 MEDIUM LOCK	22	EA
53	PNNA	WASHER, 5/16 FLAT	10	EA
54	PNNA	NUT, 5/16-18 ESNA	12	EA
55	PNNA	CAPSCREW, 5/16-18 X 1-1/4 LG HEX HEAD GR5	8	EA
56	PNNA	WASHER, 1/2 FLAT	4	EA
57	5560053	HEX JAM NUT, DRILLED	4	EA
58	5560005	ANCHOR BOLT	4	EA
59	PNNA	CAPSCREW, 3/8-16 X 1-1/2 LG SKT HD CAD PLATED	20	EA
60	PNNA	CAPSCREW, 3/8-16 X 3/4 LG SKT HD CAD PLATED	12	EA
61	0072683	SPACER (NOTE 3)	1	EA
62	0070473	CAPSCREW 5/16-18 DRILLED HEAD	10	EA
63	0070033	PIN LOCK	4	EA
64	0020267	HOSE ASSEMBLY 3/8" I.D.	2	EA
65	0180901	JIB LIFT CYLINDER SUB ASSEMBLY	1	EA
66	5034502	BULKHEAD 90 DEG ELBOW -6-6	2	EA
67	5074403	FTG LKNT BHD-6 STL	2	EA
68	0081953	SL PAD 3.00 8.00 .375 7H	2	EA
69	2500047	BRG 1.5 ID X 2.00 OD .875	2	EA
70	PNNA	MACH. BUSHING 3-1/4 X 1-3/4 X 14 GA	AR	EA
71	5036905	FTG ELB45SWVL-6S-6S STL	2	EA
72	5560257	WASHER SET SPHER .75	4	EA
73	0081774	WELDMENT SWIVEL ANCHOR	2	EA
74	302363	BRKT	2	EA
75	PNNA	MACH SCREW #10-24 X TRUSS HD	3	EA
76	PNNA	WASHER #10 MED FLAT	3	EA

Courtesy of Crane.Market

Item	Part No.	Name	Qty	Uom
77	PNNA	NUT #10-24	3	EA
78	PNNA	NUT 3/4-10 HEX JAM	8	EA
79	0181264	PIN	1	EA
80	0150685	PIN	1	EA
81	0180612	PIN	1	EA
82	0070132	PIN LOCK	1	EA
83	0030214	SL PAD 4.50 OD 3.00 ID .375 5H SP	1	EA
86	5530007	DISC SPRING	6	EA
87	0071921	SPACER (NOTE 3)	1	EA
88	PNNA	WASHER FLAT .750 HARD	1	EA
89	PNNA	CAPSCREW, 3/8-16 X 1-1/4 SKT HD CAD PATED	2	EA

Courtesy of Crane.Market

REPAIR PARTS

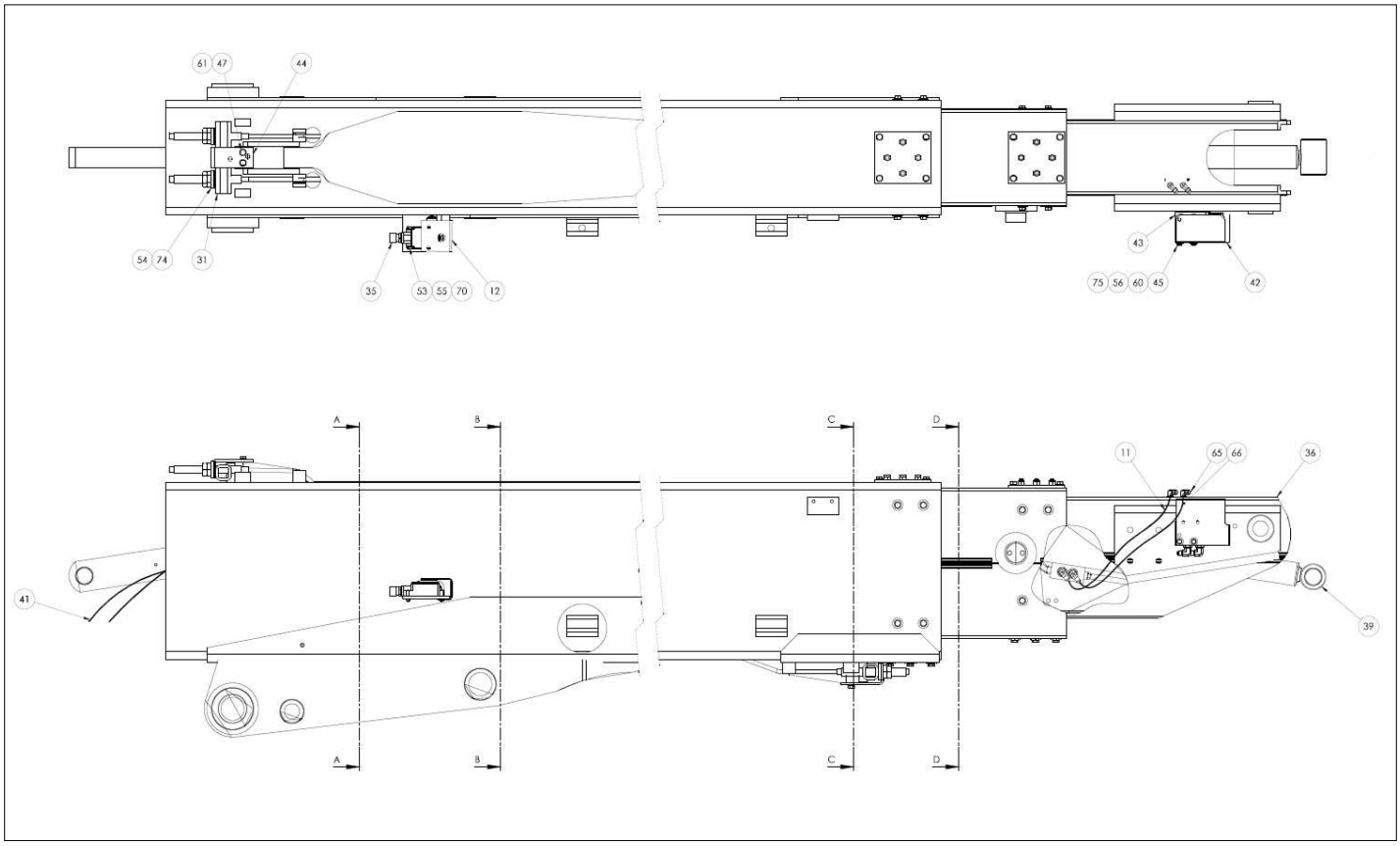

Courtesy of Crane.Market

Item	Part No.	Name	Qty	Uom
Not Shown	0084751	ASSY BOOMS TB66J	1	EA
1	0030214	SL PAD 4.50 OD 3.00 ID .375 5H SP	1	EA
2	0070030	SHIM-SLIDE PAD (.030)	REF	EA
3	0070031	SLIDE PAD	4	EA
4	0070033	PIN LOCK	2	EA
5	0070390	PIN 1.75 X 1.875 GRIP	2	EA
6	0070443	WELDMENT PIN 1.50 7.030 GRIP	1	EA
7	0070448	PIN 0.50 9.500 GRIP	1	EA
8	0070473	CAPSCREW 5/16-18 DRILLED HEAD	4	EA
9	0070486	SPACER - SLIDE PAD	6	EA
10	0070639	SLIDE PAD	2	EA
11	0070768	HOSE-4-4S-4S 18.5 100R1	2	EA
12	0071216	GUARD	1	EA
13	0072567	SHIM-SLIDE PAD (.063)	REF	EA
14	0072681	SLIDE PAD MOUNT	2	EA
15	0072682	SLIDE PAD	1	EA
16	0072683	SPACER (NOTE 3)	1	EA
17	0072751	CYL. ANCHOR	2	EA
18	0073111	SLIDE PAD SPACER	1	EA
19	0073340	SPACER - SLIDE PAD	2	EA
20	0073342	SHIM-SLIDE PAD (.063)	REF	EA
21	0073343	SHIM-SLIDE PAD (.090)	REF	EA
22	0074639	SLIDE PAD 3/8 CABLE SHEAVE	2	EA
23	0080293	SLIDE PAD	8	EA
24	0080294	SLIDE PAD	2	EA
25	0081720	INTERMEDIATE BOOM WELDMENT	1	EA

Courtesy of Crane.Market

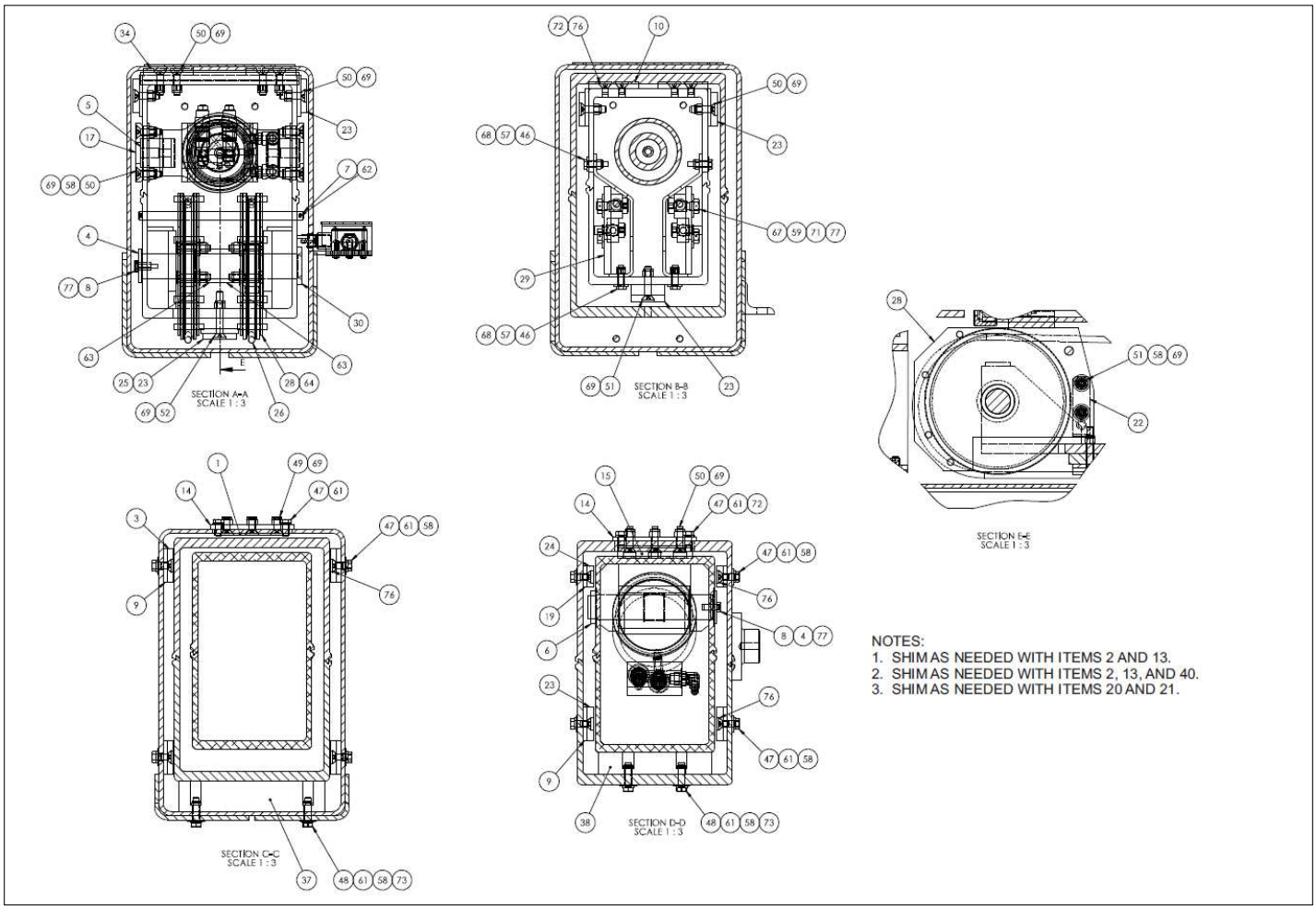

Courtesy of Crane.Market

Item	Part No.	Name	Qty	Uom
26	0081730	WIRE ROP ASSY-RETRACT 3/8 DIA	2	EA
27	0081745	EXTENSION CYLINDER ASSY	1	EA
28	0081749	WELDMENT SHEAVE CAGE	2	EA
29	0081752	WELDMENT WIRE ROPE ANCHOR	2	EA
30	0081759	WELDMENT PIN 1.50 9.313 GRIP	1	EA
31	0081774	WELDMENT SWIVEL ANCHOR	2	EA
32	0081776	CABLE SHEAVE	2	EA
33	0081782	BASE BOOM WELDMENT	1	EA
34	0081953	SL PAD 3.00 8.00 .375 7H	2	EA
35	0081975	BOOM SWITCH ASSY SWITCH ONLY	1	EA
36	0082099	TIP BOOM WELDMENT TB-A60 TUV	1	EA
37	0084536	SLIDE PAD UHMW SLIDE PAD	1	EA
38	0084537	SLIDE PAD UHMW SLIDE PAD	1	EA
39	0084753	SLAVE LEVEL CYL ASSY	1	EA
40	0090141	SHIM-SLIDE PAD (.090)	REF	EA
41	0100422	3/8 INCH HYDRAULIC HOSE	2	EA
42	0112795	COVER	1	EA
43	0112796	VALVE ASSEMBLY	1	EA
44	302363	BRKT	2	EA
45	970159	BLT .25-20 X 3.50 LG. HH	2	EA
46	970269	BOLT .313-18 1.25 GR. 5	12	EA
47	970449	CAPSCREW 3/8-16 X 3/4 INCH LONG HEX HEAD GRADE 5	28	EA
48	970489	CAPSCREW 3/8-16 X 1-1/2 INCH LONG HEX HEAD GRADE 5	12	EA
49	972469	CAPSCREW 3/8-16 X 1 INCH LONG SOCKET FLAT HEAD	4	EA

Courtesy of Crane.Market

Item	Part No.	Name	Qty	Uom
50	972489	3/8-16NC 1 1/2 LARGE FLAT SOCKET HD	34	EA
51	972509	3/8-16NC X 2 LG FLAT SOCKET HD	7	EA
52	972539	FLSKTHD .375 X 2.75 ZINC PLTD	3	EA
53	974709	SCREW RHD #10-24 X 1 PLATED	3	EA
54	984469	NUT, 3/4-10 HEX JAM	8	EA
55	986009	FLAT WASHER #10	3	EA
56	986019	WASHER FLAT .250	2	EA
57	986269	WASHER 5/16 MEDIUM FLAT	12	EA
58	986299	BOLT HEXHD .313-18 2.50 GR. 5	40	EA
59	986359	WASHER 1/2 MEDIUM FLAT	4	EA
60	987099	WASHER LOCK .250	2	EA
61	987119	BOLT HEXHD .375-16 1.75 GR. 5	40	EA
62	988179	COTTER PIN 1/8 INCH DIAMETER X 1 INCH LONG (SWINGING GATE FOR 5 STEEL PLATFORMS)	2	EA
63	2500046	BRG 1.50 ID 2.00 OD 1.25	2	EA
64	2500047	BRG 1.5 ID X 2.00 OD .875	2	EA
65	5034501	FTG ELB90BHD-4S-4S STL	2	EA
66	5074401	FTG LKNT BDH-4 STL	2	EA
67	5560005	ANCHOR BOLT	4	EA
68	5560031	NUT HEX LKG .313-18	12	EA
69	5560033	NUT HEXHD .375-16 LKG	48	EA
70	5560034	NUT HEX LKG 10-24	3	EA
71	5560053	HEX JAM NUT, DRILLED	4	EA
72	5560126	THREAD INSERT .375-16 .375 LKG	14	EA
73	5560244	NUT WELD TAB .375-16	12	EA

Courtesy of Crane.Market

Item	Part No.	Name	Qty	Uom
74	5560257	WASHER SET SPHER .75	4	EA
75	5560603	NUT SERT .250-20	3	EA
76	5560679	CAPSCREW 3/8-16 X 5/8 INCH LONG SOCKET FLAT HEAD	34	EA
77	9980012	.040 INCH DIAMETER STAINLESS STEEL SAFETY LOCKWIRE -(SOLD IN ONE POUND CAN)	1	EA

Courtesy of Crane.Market

REPAIR PARTS

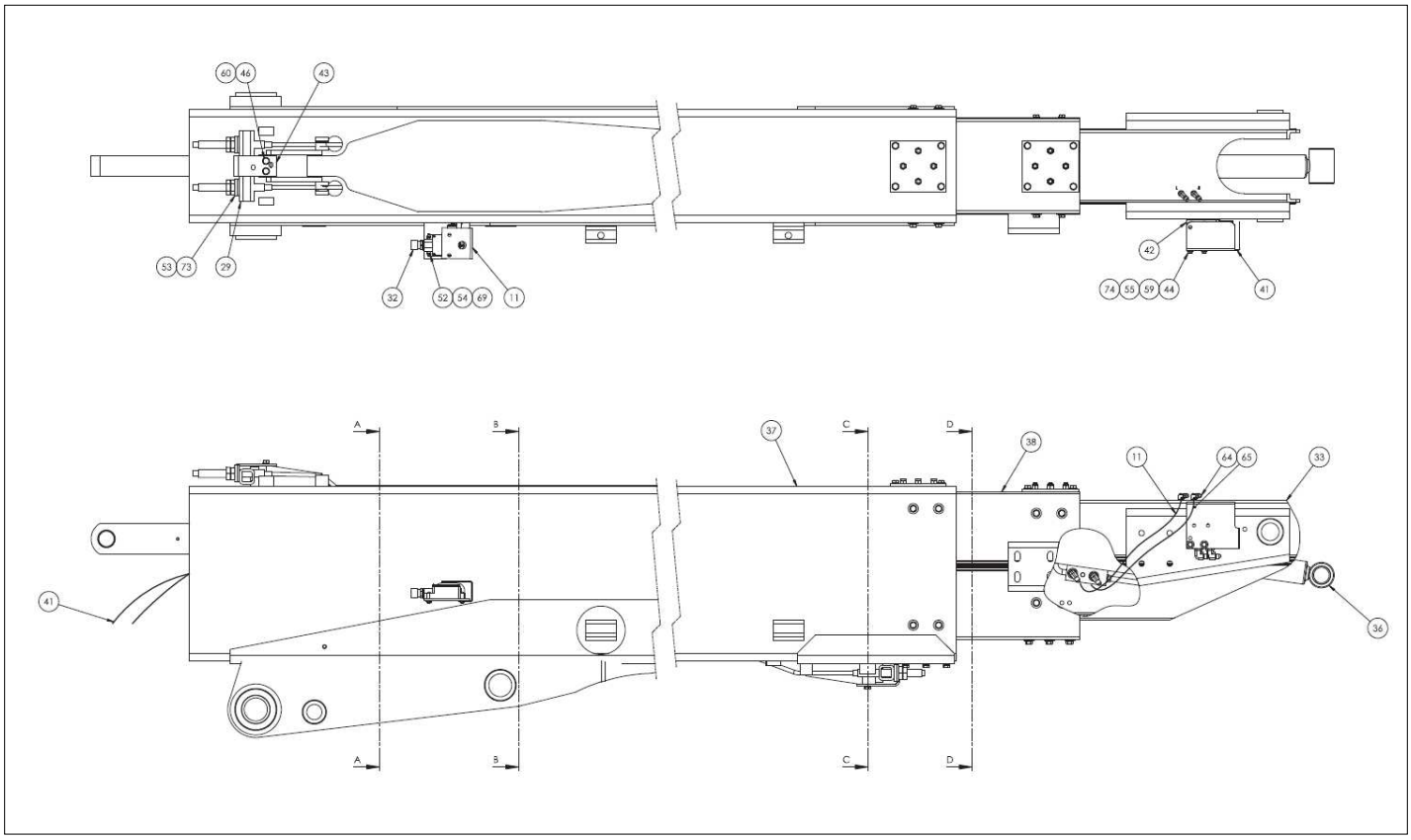

Courtesy of Crane.Market

Item	Part No.	Name	Qty	Uom
1	0030214	SL PAD 4.50 OD 3.00 ID .375 5H SP	1	EA
2	0070030	SHIM-SLIDE PAD (.030)	REF	EA
3	0070031	SLIDE PAD	4	EA
4	0070390	PIN 1.75 X 1.875 GRIP	2	EA
5	0070443	WELDMENT PIN 1.50 7.030 GRIP	1	EA
6	0070448	PIN 0.50 9.500 GRIP	1	EA
7	0070473	CAPSCREW 5/16-18 DRILLED HEAD	4	EA
8	0070486	SPACER - SLIDE PAD	6	EA
9	0070639	SLIDE PAD	2	EA
10	0070768	HOSE-4-4S-4S 18.5 100R1	2	EA
11	0071216	GUARD	1	EA
12	0072567	SHIM-SLIDE PAD (.063)	REF	EA
13	0072681	SLIDE PAD MOUNT	2	EA
14	0072682	SLIDE PAD	1	EA
15	0072683	SPACER (NOTE 3)	1	EA
16	0072751	CYL. ANCHOR	2	EA
17	0073111	SLIDE PAD SPACER	1	EA
18	0073340	SPACER - SLIDE PAD	2	EA
19	0073342	SHIM-SLIDE PAD (.063)	REF	EA
20	0073343	SHIM-SLIDE PAD (.090)	REF	EA
21	0074639	SLIDE PAD 3/8 CABLE SHEAVE	2	EA
22	0080293	SLIDE PAD	8	EA
23	0080294	SLIDE PAD	2	EA
24	0081730	WIRE ROP ASSY-RETRACT 3/8 DIA	2	EA
25	0081745	EXTENSION CYLINDER ASSY	1	EA
26	0081749	WELDMENT SHEAVE CAGE	2	EA
27	0081752	WELDMENT WIRE ROPE ANCHOR	2	EA

Courtesy of Crane.Market

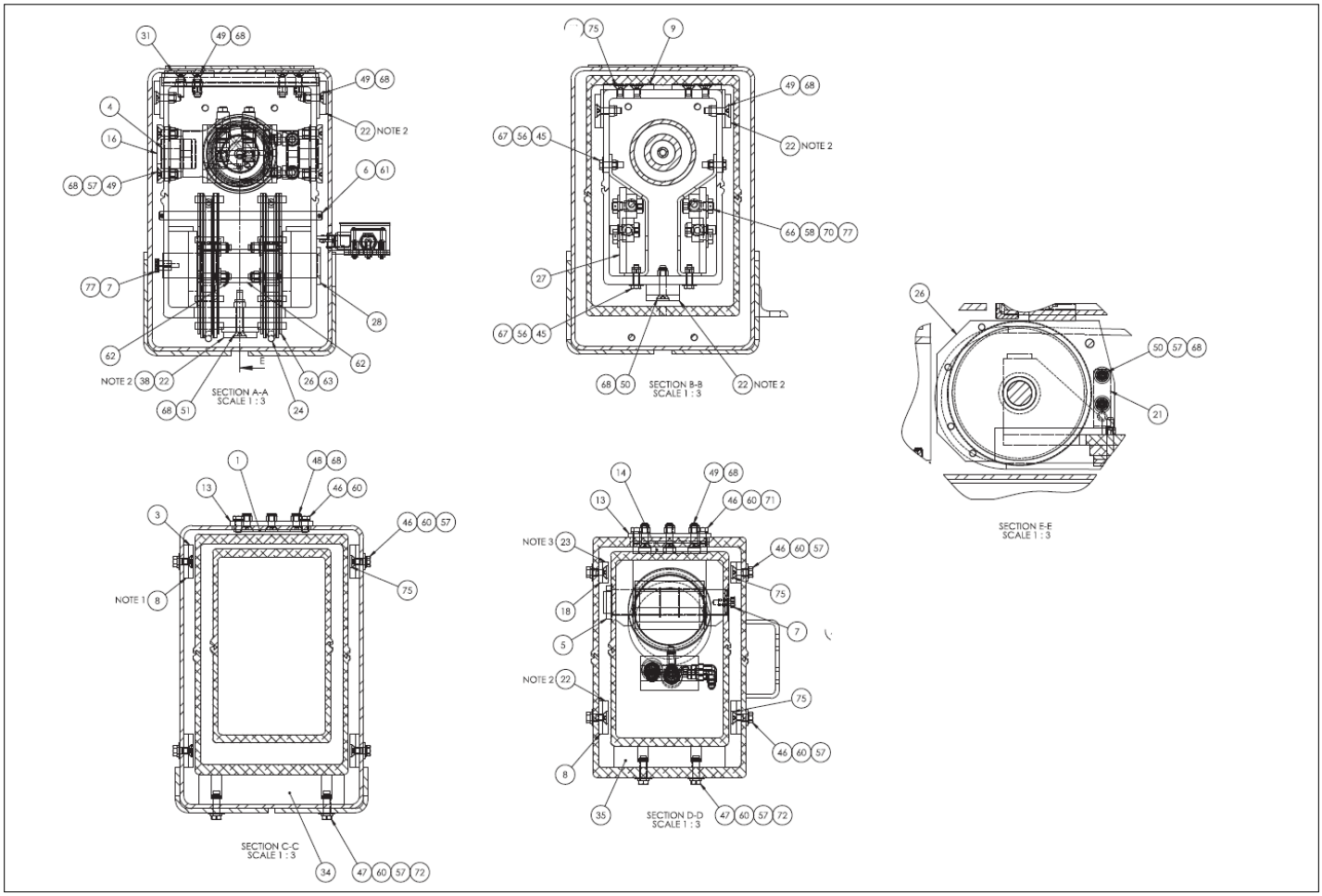

Courtesy of Crane.Market

Item	Part No.	Name	Qty	Uom
28	0081759	WELDMENT PIN 1.50 9.313 GRIP	1	EA
29	0081774	WELDMENT SWIVEL ANCHOR	2	EA
30	0081776	CABLE SHEAVE	2	EA
31	0081953	SL PAD 3.00 8.00 .375 7H	2	EA
32	0081975	BOOM SWITCH ASSY SWITCH ONLY	1	EA
33	0082099	TIP BOOM WELDMENT TB-A60 TUV	1	EA
34	0084536	SLIDE PAD UHMW SLIDE PAD	1	EA
35	0084537	SLIDE PAD UHMW SLIDE PAD	1	EA
36	0084753	SLAVE LEVEL CYL ASSY	1	EA
37	0084787	WELDMENT BASE BOOM	1	EA
38	0084788	WELDMENT INT BOOM	1	EA
39	0090141	SHIM-SLIDE PAD (.090)	REF	EA
40	0100422	3/8 INCH HYDRAULIC HOSE	2	EA
41	0112795	COVER	1	EA
42	0112796	VALVE ASSEMBLY	1	EA
43	302363	BRKT	2	EA
44	970159	BLT .25-20 X 3.50 LG. HH	2	EA
45	970269	BOLT .313-18 1.25 GR. 5	12	EA
46	970449	CAPSCREW 3/8-16 X 3/4 INCH LONG HEX HEAD GRADE 5	28	EA
47	970489	CAPSCREW 3/8-16 X 1-1/2 INCH LONG HEX HEAD GRADE 5	12	EA
48	972469	CAPSCREW 3/8-16 X 1 INCH LONG SOCKET FLAT HEAD	4	EA
49	972489	3/8-16NC 1 1/2 LARGE FLAT SOCKET HD	34	EA
50	972509	3/8-16NC X 2 LG FLAT SOCKET HD	7	EA
51	972539	FLSKTHD .375 X 2.75 ZINC PLTD	3	EA

Courtesy of Crane.Market

Item	Part No.	Name	Qty	Uom
52	974709	SCREW RHD #10-24 X 1 PLATED	3	EA
53	984469	NUT, 3/4-10 HEX JAM	8	EA
54	986009	FLAT WASHER #10	3	EA
55	986019	WASHER FLAT .250	2	EA
56	986269	WASHER 5/16 MEDIUM FLAT	12	EA
57	986299	BOLT HEXHD .313-18 2.50 GR. 5	40	EA
58	986359	WASHER 1/2 MEDIUM FLAT	4	EA
59	987099	WASHER LOCK .250	2	EA
60	987119	BOLT HEXHD .375-16 1.75 GR. 5	40	EA
61	988179	COTTER PIN 1/8 INCH DIAMETER X 1 INCH LONG (SWINGING GATE FOR 5 STEEL PLATFORMS)	2	EA
62	2500046	BRG 1.50 ID 2.00 OD 1.25	2	EA
63	2500047	BRG 1.5 ID X 2.00 OD .875	2	EA
64	5034501	FTG ELB90BHD-4S-4S STL	2	EA
65	5074401	FTG LKNT BDH-4 STL	2	EA
66	5560005	ANCHOR BOLT	4	EA
67	5560031	NUT HEX LKG .313-18	12	EA
68	5560033	NUT HEXHD .375-16 LKG	48	EA
69	5560034	NUT HEX LKG 10-24	3	EA
70	5560053	HEX JAM NUT, DRILLED	4	EA
71	5560126	THREAD INSERT .375-16 .375 LKG	14	EA
72	5560244	NUT WELD TAB .375-16	12	EA
73	5560257	WASHER SET SPHER .75	4	EA
74	5560603	NUT SERT .250-20	3	EA
75	5560679	CAPSCREW 3/8-16 X 5/8 INCH LONG SOCKET FLAT HEAD	34	EA

Courtesy of Crane.Market

Item	Part No.	Name	Qty	Uom
76	9980012	.040 INCH DIAMETER STAINLESS STEEL SAFETY LOCKWIRE -(SOLD IN ONE POUND CAN)	1	EA

Courtesy of Crane.Market

REPAIR PARTS

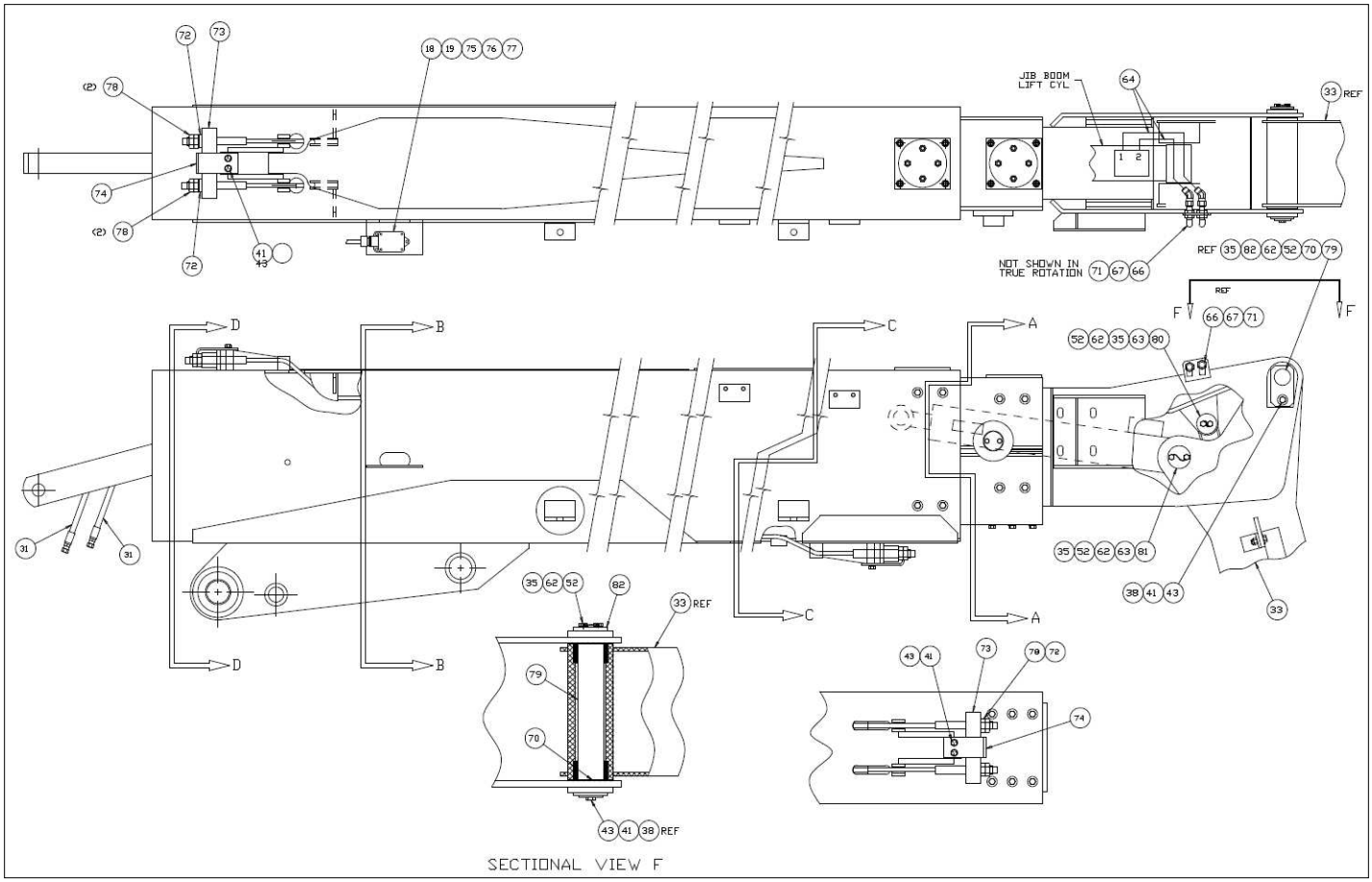

Courtesy of Crane.Market

Item	Part No.	Name	Qty	Uom
1	0081782	BASE BOOM WELDMENT	1	EA
2	0081720	INTERMEDIATE BOOM WELDMENT	1	EA
3	0081719	TIP BOOM	1	EA
4	0081745	EXTENSION CYLINDER ASSY	1	EA
5	0081730	WIRE ROP ASSY-RETRACT 3/8 DIA	2	EA
6	0070442	WLDMT PIN 1.50 5.875 GRIP	1	EA
7	0081776	CABLE SHEAVE	2	EA
8	0081749	WELDMENT SHEAVE CAGE	2	EA
9	0081759	WELDMENT PIN 1.50 9.313 GRIP	1	EA
10	0084536	SLIDE PAD UHMW SLIDE PAD	1	EA
11	0084537	SLIDE PAD UHMW SLIDE PAD	1	EA
12	0081752	WELDMENT WIRE ROPE ANCHOR	2	EA
15	0072681	SLIDE PAD MOUNT	2	EA
16	0072682	SLIDE PAD	1	EA
17	0073111	SLIDE PAD SPACER	1	EA
18	0081975	BOOM SWITCH ASSY SWITCH ONLY	1	EA
19	0071216	GUARD	1	EA
20	0070448	PIN 0.50 9.500 GRIP	1	EA
21	988179	COTTER PIN 1/8 INCH DIAMETER X 1 INCH LONG (SWINGING GATE FOR 5 STEEL PLATFORMS)	2	EA
22	0072751	CYL. ANCHOR	2	EA
23	0070390	PIN 1.75 X 1.875 GRIP	2	EA
24	0070486	SPACER - SLIDE PAD	6	EA
25	0080294	SLIDE PAD	2	EA
26	0070030	SHIM-SLIDE PAD (.030)	8	EA
27	0072567	SHIM-SLIDE PAD (.063)	8	EA

Courtesy of Crane.Market

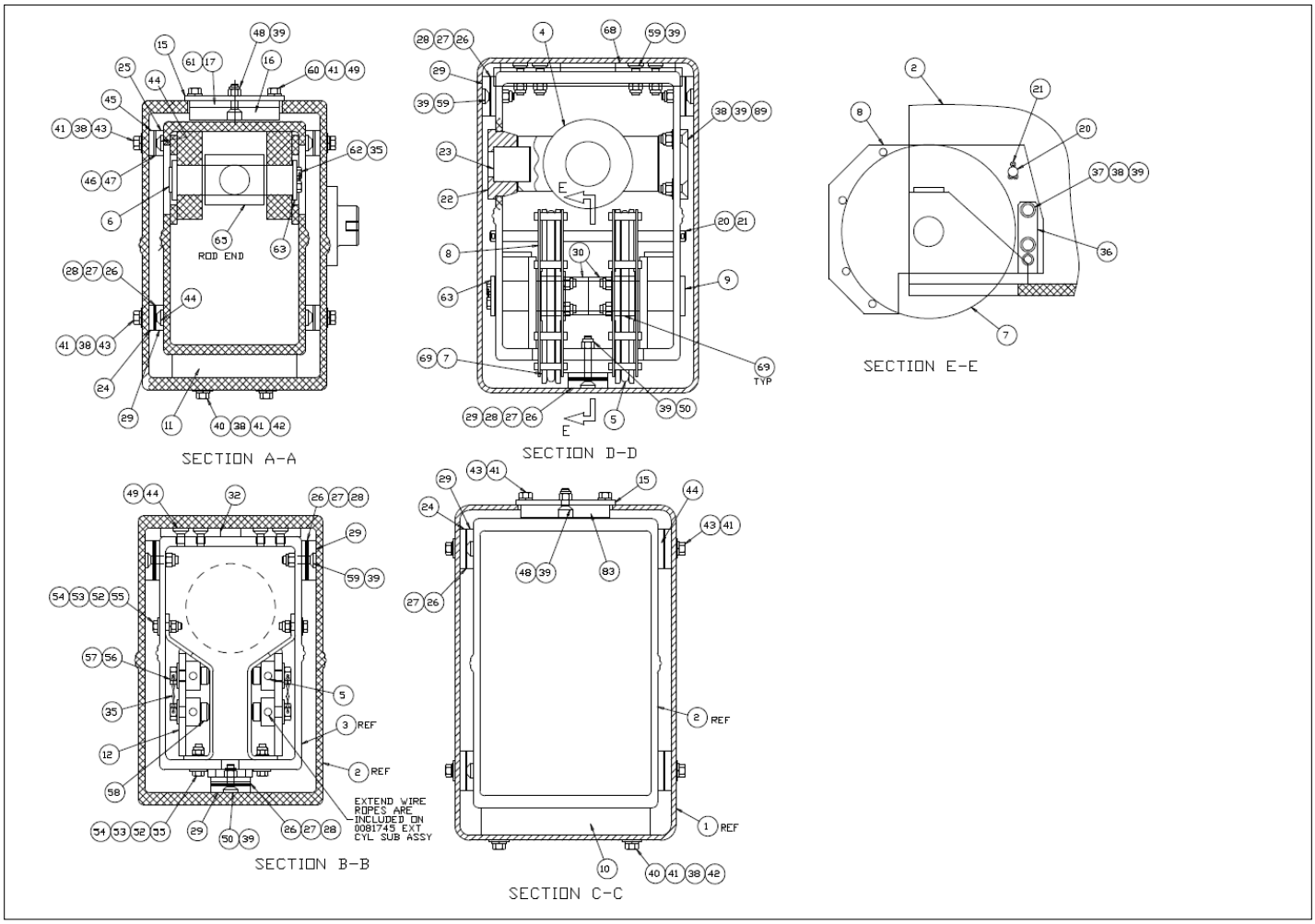

Courtesy of Crane.Market

Item	Part No.	Name	Qty	Uom
28	0090141	SHIM-SLIDE PAD (.090)	4	EA
29	0080293	SLIDE PAD	12	EA
30	2500046	BRG 1.50 ID 2.00 OD 1.25	2	EA
31	0100422	3/8 INCH HYDRAULIC HOSE	2	EA
32	0070639	SLIDE PAD	2	EA
33	0181221	JIB BOOM	1	EA
35	9980012	.040 INCH DIAMETER STAINLESS STEEL SAFETY LOCKWIRE -(SOLD IN ONE POUND CAN)	1	EA
36	0074639	SLIDE PAD 3/8 CABLE SHEAVE	2	EA
37	972509	3/8-16NC X 2 LG FLAT SOCKET HD	6	EA
38	5563038	FLAT WASHER 3/8"	35	EA
39	5560033	NUT HEXHD .375-16 LKG	18	EA
40	970469	BOLT HEXHD .375-16 1.00 GR. 5	6	EA
41	987119	BOLT HEXHD .375-16 1.75 GR. 5	41	EA
42	5560244	NUT WELD TAB .375-16	12	EA
43	970448	CAPSCREW, 3/8-16 X 3/4 LG. HEX HD. GR5	21	EA
44	5560679	CAPSCREW 3/8-16 X 5/8 INCH LONG SOCKET FLAT HEAD	22	EA
45	0073340	SPACER - SLIDE PAD	2	EA
46	0073342	SHIM-SLIDE PAD (.063)	4	EA
47	0073343	SHIM-SLIDE PAD (.090)	4	EA
48	972469	CAPSCREW 3/8-16 X 1 INCH LONG SOCKET FLAT HEAD	4	EA
49	5560126	THREAD INSERT .375-16 .375 LKG	14	EA
50	5560675	CAPSCREW, 3/8-16 X 1 1/4 LG. FLAT SOC. HD. PLATED	2	EA
51	970369	CAPSCREW 5/16-18	4	EA

Courtesy of Crane.Market

Item	Part No.	Name	Qty	Uom
52	987109	WASHER LOCK .313	22	EA
53	986269	WASHER 5/16 MEDIUM FLAT	10	EA
54	5560031	NUT HEX LKG .313-18	12	EA
55	970269	BOLT .313-18 1.25 GR. 5	8	EA
56	986359	WASHER 1/2 MEDIUM FLAT	4	EA
57	5560053	HEX JAM NUT, DRILLED	4	EA
58	5560005	ANCHOR BOLT	4	EA
59	972489	3/8-16NC 1 1/2 LARGE FLAT SOCKET HD	20	EA
60	978329	BOLT .375-16 .750 SK HD CAD PLATED	12	EA
61	0072683	SPACER (NOTE 3)	1	EA
62	0070473	CAPSCREW 5/16-18 DRILLED HEAD	10	EA
63	0070033	PIN LOCK	4	EA
64	0020267	HOSE ASSEMBLY 3/8" I.D.	2	EA
65	0180901	JIB LIFT CYLINDER SUB ASSEMBLY	1	EA
66	5034502	BULKHEAD 90 DEG ELBOW -6-6	2	EA
67	5074403	FTG LKNT BHD-6 STL	2	EA
68	0081953	SL PAD 3.00 8.00 .375 7H	2	EA
69	2500047	BRG 1.5 ID X 2.00 OD .875	2	EA
70	5563309	MACHINE BUSHING 3.25OD - 1.75ID X 14GA	AR	EA
71	5036905	FTG ELB45SWVL-6S-6S STL	2	EA
72	5560257	WASHER SET SPHER .75	4	EA
73	0081774	WELDMENT SWIVEL ANCHOR	2	EA
74	302363	BRKT	2	EA
75	5560673	MACHINE SCREW #10-24NC X 1" LG	3	EA
76	986009	FLAT WASHER #10	3	EA

Courtesy of Crane.Market

Item	Part No.	Name	Qty	Uom
77	984469	NUT, 3/4-10 HEX JAM	3	EA
78	5560034	NUT HEX LKG 10-24	8	EA
79	0181264	PIN	1	EA
80	0150685	PIN	1	EA
81	0180612	PIN	1	EA
82	0070132	PIN LOCK	1	EA
83	0030214	SL PAD 4.50 OD 3.00 ID .375 5H SP	1	EA
89	5563070	CAPSCREW, 3/8-16 X 1-1/4 SKT HD CAD PATED	2	EA

Courtesy of Crane.Market

REPAIR PARTS

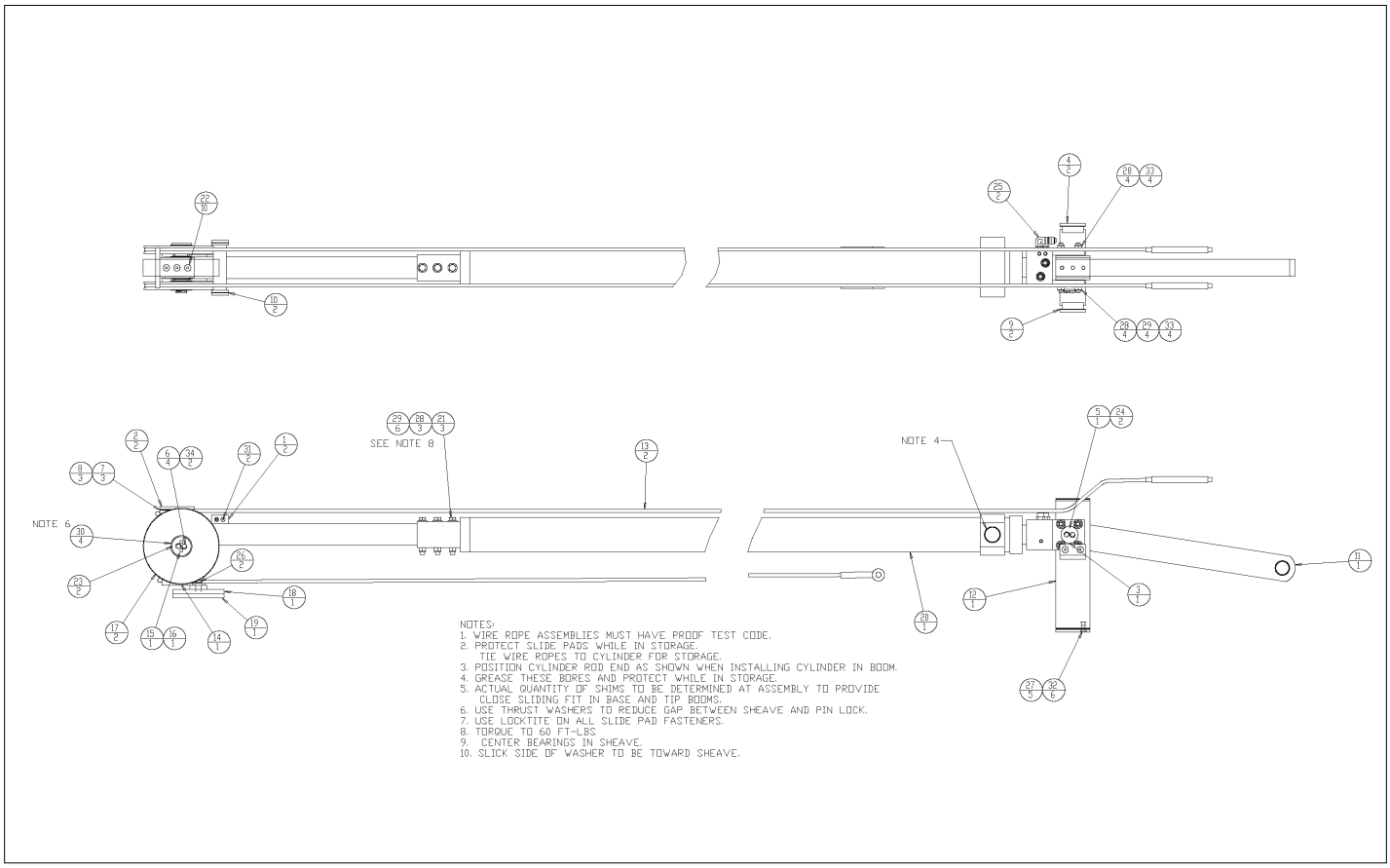

Courtesy of Crane.Market

Item	Part No.	Name	Qty	Uom
1	0060089	SLIDE PAD	2	EA
2	0070029	SLIDE PAD	2	EA
3	0070033	PIN LOCK	1	EA
4	0070141	SLIDE PAD	2	EA
5	0070440	LINK PIN	1	EA
6	0070473	CAPSCREW 5/16-18 DRILLED HEAD	4	EA
7	0070838	SLIDE PAD SHIM, .030 INCH THICK	3	EA
8	0071272	SLIDE PAD SHIM, .063 INCH THICK	3	EA
9	0071341	SHIM, .063 THICK	2	EA
10	0071342	SHIM	2	EA
11	0080019	LINK	1	EA
12	0080980	SUPPORT BRKT ROD END	1	EA
13	0081731	WIRE ROPE ASSY-EXTEND 3/8 DIA	2	EA
14	0081736	SUPPORT BRKT EXTEND CYL	1	EA
15	0081761	WLDMT PIN 1.50 5.120 GRIP	1	EA
16	0081763	PIN LOCK 2.25 DIA 4H	1	EA
17	0081776	CABLE SHEAVE	2	EA
18	0081931	SPCR .500 3.00 6.00 5H STL	1	EA
19	0081932	SL PAD 3.00 6.00 .500 5H SP	1	EA
20	0083472	CYL 3.50 164.00 2.25 EXTEND	1	EA
Not Shown	0080975	EXTENSION CYLINDER	1	EA
21	971009	CAPSCREW, 1/2-13 X 4 LG HEXHD GR5	3	EA
22	972449	CAPSCREW 3/8-16 X 3/4 INCH LONG SOCKET FLAT HEAD	10	EA
23	2500047	BRG 1.5 ID X 2.00 OD .875	2	EA
24	2502432	BEARING, 1-1/2 BORE X 2 LG	2	EA

Courtesy of Crane.Market

Item	Part No.	Name	Qty	Uom
25	5035315	FTG ELB 90° STRTHD-6B-8S STL	2	EA
26	5560005	ANCHOR BOLT	2	EA
27	5560033	NUT HEXHD .375-16 LKG	5	EA
28	5560039	NUT LKG .500-13	11	EA
29	5560168	WSHR HARD FLAT .500 SP	6	EA
30	5560256	BEARING THR	4	EA
31	5560331	CAPSCREW 1/4-20 X 1 INCH LONG SOCKET FLAT HEAD	2	EA
32	5560675	CAPSCREW, 3/8-16 X 1 1/4 LG. FLAT SOC. HD. PLATED	6	EA
33	5560718	CAPSCREW, 1/2-13 X 1-3/4 LG FH SOCKET	8	EA
34	9980012	.040 INCH DIAMETER STAINLESS STEEL SAFETY LOCKWIRE -(SOLD IN ONE POUND CAN)	1	EA

Courtesy of Crane.Market

REPAIR PARTS

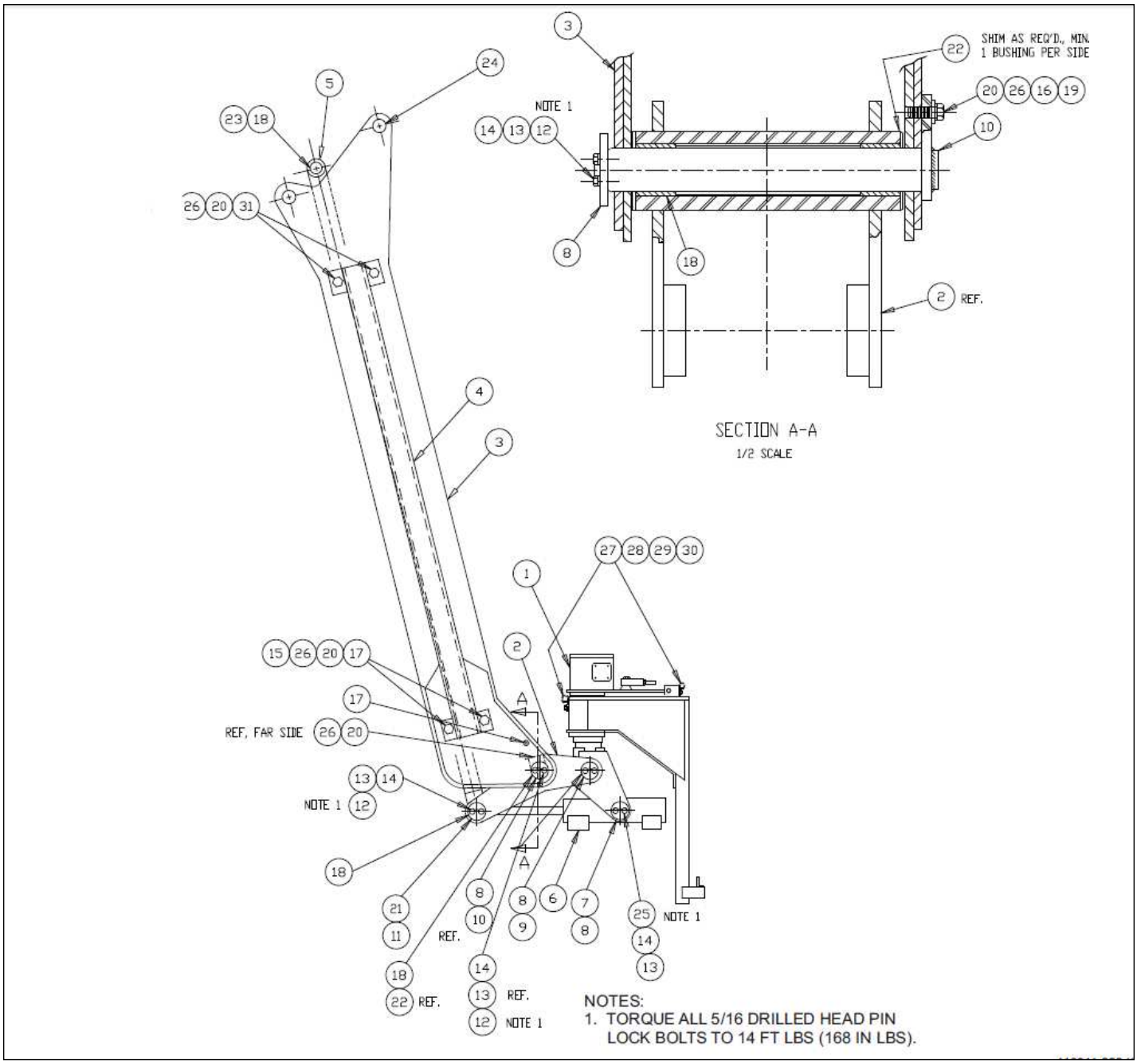

Courtesy of Crane.Market

Item	Part No.	Name	Qty	Uom
Not Shown	0181221	JIB BOOM	1	EA
1	0180873	PLATFORM ROTATOR	1	EA
2	0180596	BELL CRANK	1	EA
3	0181126	JIB BOOM	1	EA
4	0191324	HOSE CARRIER TUBE	1	EA
5	0180640	LEVELING LINK	1	EA
6	0180906	SLAVE LEVEL CYLINDER	1	EA
7	0180521	PIN	2	EA
8	0070033	PIN LOCK	4	EA
9	0180597	PIN	1	EA
10	0181263	PIN	1	EA
11	0180606	PIN	1	EA
12	0070473	CAPSCREW 5/16-18 DRILLED HEAD	6	EA
13	987109	WASHER LOCK .313	10	EA
14	9980012	.040 INCH DIAMETER STAINLESS STEEL SAFETY LOCKWIRE -(SOLD IN ONE POUND CAN)	1	EA
15	986269	WASHER 5/16 MEDIUM FLAT	5	EA
16	986299	BOLT HEXHD .313-18 2.50 GR. 5	1	EA
17	5560126	THREAD INSERT .375-16 .375 LKG	3	EA
18	2500035	BEARING	4	EA
19	5560015	THREAD INSERT 3/8-16	3	EA
20	970449	CAPSCREW 3/8-16 X 3/4 INCH LONG HEX HEAD GRADE 5	6	EA
21	0180635	PIN LOCK	1	EA
22	5563309	MACHINE BUSHING 3.25OD - 1.75ID X 14GA	4	EA
23	0180941	SPACER	1	EA

Courtesy of Crane.Market

Item	Part No.	Name	Qty	Uom
24	2500039	BUSHING	REF	EA
25	5560213	CAPSCREW 5/16-18 DRILLED HEAD	4	EA
26	987119	BOLT HEXHD .375-16 1.75 GR. 5	6	EA
27	987099	WASHER LOCK .250	2	EA
28	5093027	CLAMP	2	EA
29	970029	CAPSCREW 1/4-20 X 3/4 INCH LONG HEX HEAD GRADE 5	2	EA
30	986019	WASHER FLAT .250	2	EA

Courtesy of Crane.Market

REPAIR PARTS

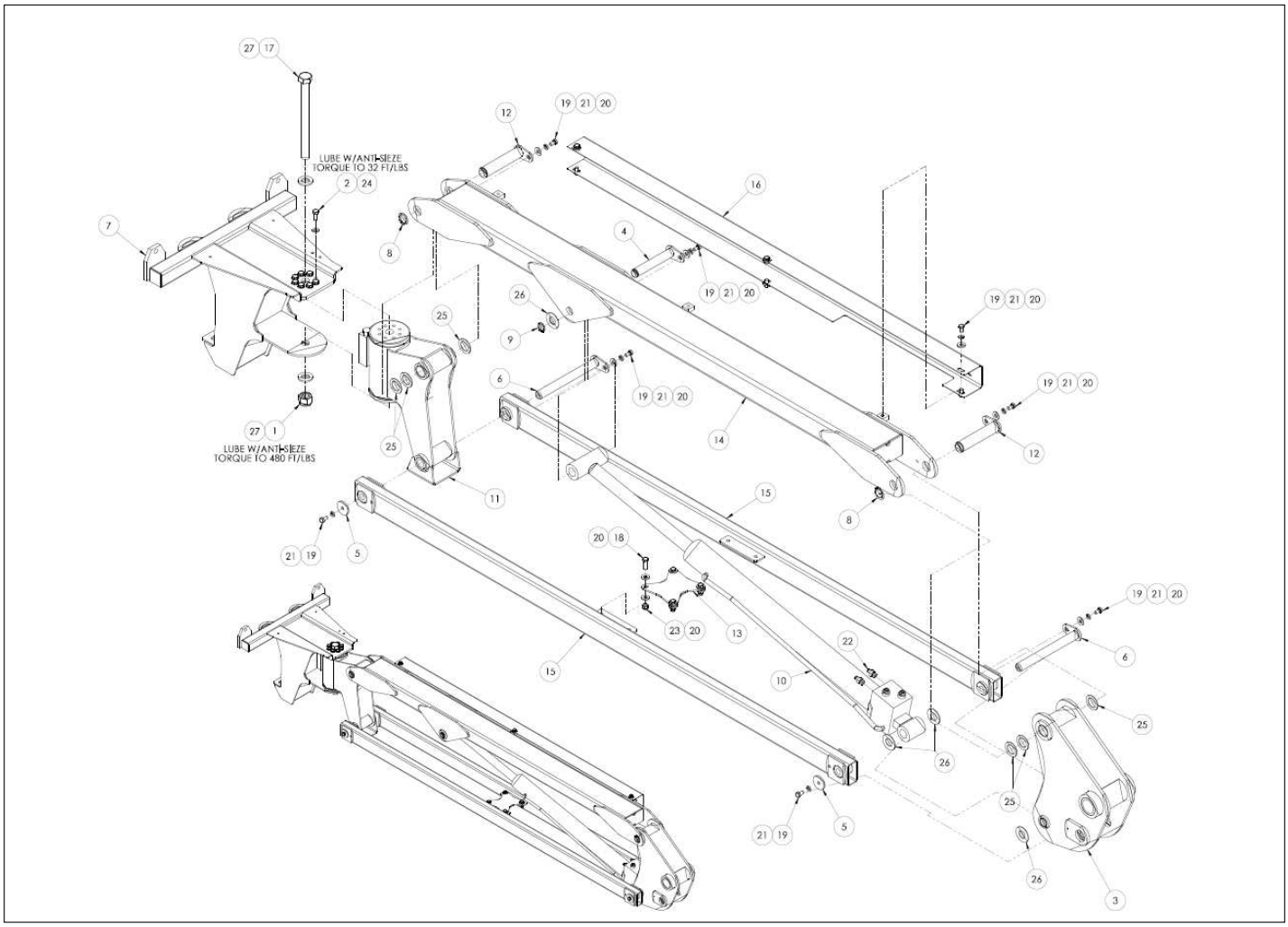

Courtesy of Crane.Market

Item	Part No.	Name	Qty	Uom
Not Shown	0084752	ASSEMBLY 6FT JIB	1	EA
1	056064-024	NUT HEX M24-3.0 GR 10.9 SELF LOCKING DIN 985	1	EA
2	058508-025	HHCS M10 X 1.5 x 25 G10.9 DIN 933	8	EA
3	0084735	WLDMT, JIB INNER QUADRANT	1	EA
4	0172213	PIN, TEARDROP, Ø1.0 X 5.79 GRIP	1	EA
5	0172214	END CAP, 1 IN PIN	2	EA
6	0172216	PIN, TEARDROP, Ø1.0 X 9.43 GRIP	2	EA
7	0172307	WLDMT, BASKET MTG BRKT	1	EA
8	300541	SNAP RING 1.25 ID HEAVY DUTY	2	EA
9	300542	SNAP RING 1.00 ID HEAVY DUTY	1	EA
10	0420111	JIB CYLINDER (WALTCO)	1	EA
11	0420114	ASSEMBLY, ROTATOR PLATFORM	1	EA
12	0420124	PIN, TEARDROP, Ø1.25 X 5.79 GRIP	2	EA
13	0420132	PLT TIE 7' JIB	1	EA
14	0420731	JIB 7'	1	EA
15	0420732	WLDMT UPPER ARM 7' JIB	2	EA
16	0420878	COVER HOSE, 7' JIB	1	EA
17	512649-280	HHCS M24 X 3.0 X 280 G10.9 DIN 931 ZP	1	EA
18	970419	BOLT HEXHD .375-16 1.25 GR. 5	4	EA
19	970439	CAPSCREW 3/8-16 X 5/8"LG H.H.	13	EA
20	986299	BOLT HEXHD .313-18 2.50 GR. 5	19	EA
21	987119	BOLT HEXHD .375-16 1.75 GR. 5	13	EA

Courtesy of Crane.Market

Item	Part No.	Name	Qty	Uom
22	5065705	FTG, ADAPTER STRTHD -6B-4S STL	2	EA
23	5560033	NUT HEXHD .375-16 LKG	4	EA
24	5560222	WASHER HARD FLAT .375 SP	8	EA
25	5560712	MACH BSHG 1.25 ID X 1.88 OD X .075	6	EA
26	5560713	MACHINE BUSHING 2 INCH OD X 1 INCH ID X 14 GAUGE THICK	7	EA
27	5569991	WASHER HARD FLAT M24	2	EA

Courtesy of Crane.Market

REPAIR PARTS

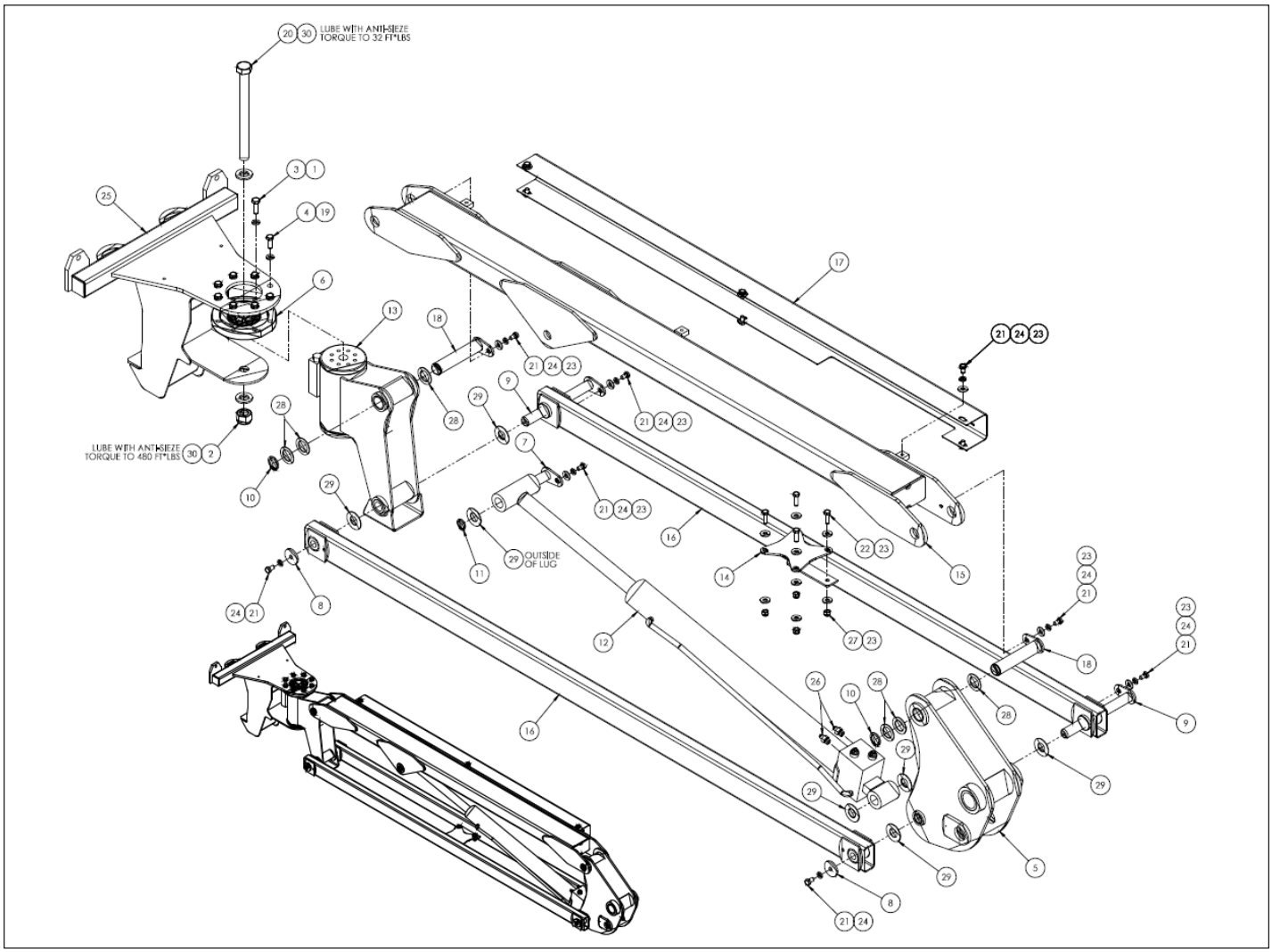

Courtesy of Crane.Market

Item	Part No.	Name	Qty	Uom
Not Shown	0084771	ASSY 6FT JIB CE	1	EA
1	056021-012	WASHER LOCK M12 DIN 127	2	EA
2	056064-024	NUT HEX M24-3.0 GR 10.9 SELF LOCKING DIN 985	7	EA
3	058494-035	HHCS M12 X 1.75 X 35 G8.8 ISO 4017_DIN 933	6	EA
4	058509-030	HHD BLT M10-1.5 X 30MM GR10.9	4	EA
5	0084735	WLDMT, JIB INNER QUADRANT	2	EA
6	116346-000	PLATFORM OVERLOAD SENSOR	1	EA
7	0172213	PIN, TEARDROP, Ø1.0 X 5.79 GRIP	13	EA
8	0172214	END CAP, 1 IN PIN	19	EA
9	0172216	PIN, TEARDROP, Ø1.0 X 9.43 GRIP	4	EA
10	300541	SNAP RING 1.25 ID HEAVY DUTY	13	EA
11	300542	SNAP RING 1.00 ID HEAVY DUTY	1	EA
12	0420111	JIB CYLINDER (WALTCO)	8	EA
13	0420114	ASSEMBLY, ROTATOR PLATFORM	2	EA
14	0420132	PLT TIE 7' JIB	1	EA
15	0420731	JIB 7'	2	EA
16	0420732	WLDMT UPPER ARM 7' JIB	1	EA
17	0420878	COVER HOSE, 7' JIB	1	EA
18	0421711	PIN TEARDROP 1.25 X 5.915 GRIP	1	EA
19	505087-010	WASHER HARDENED M10	1	EA
20	510682-280	HHCS M24 X 3.0 X 280 G10.9 DIN 931	1	EA
21	970439	CAPSCREW 3/8-16 X 5/8"LG H.H.	2	EA

Courtesy of Crane.Market

Item	Part No.	Name	Qty	Uom
22	972479	BLT HEXHD .375-16 1.25 GR5	2	EA
23	986299	BOLT HEXHD .313-18 2.50 GR. 5	2	EA
24	987119	BOLT HEXHD .375-16 1.75 GR. 5	1	EA
25	1430312	MOUNT PLATFORM	1	EA
26	5065705	FTG, ADAPTER STRTHD -6B-4S STL	1	EA
27	5560033	NUT HEXHD .375-16 LKG	8	EA
28	5560712	MACH BSHG 1.25 ID X 1.88 OD X .075	8	EA
29	5560713	MACHINE BUSHING 2 INCH OD X 1 INCH ID X 14 GAUGE THICK	1	EA
30	5569991	WASHER HARD FLAT M24	8	EA

Courtesy of Crane.Market

REPAIR PARTS

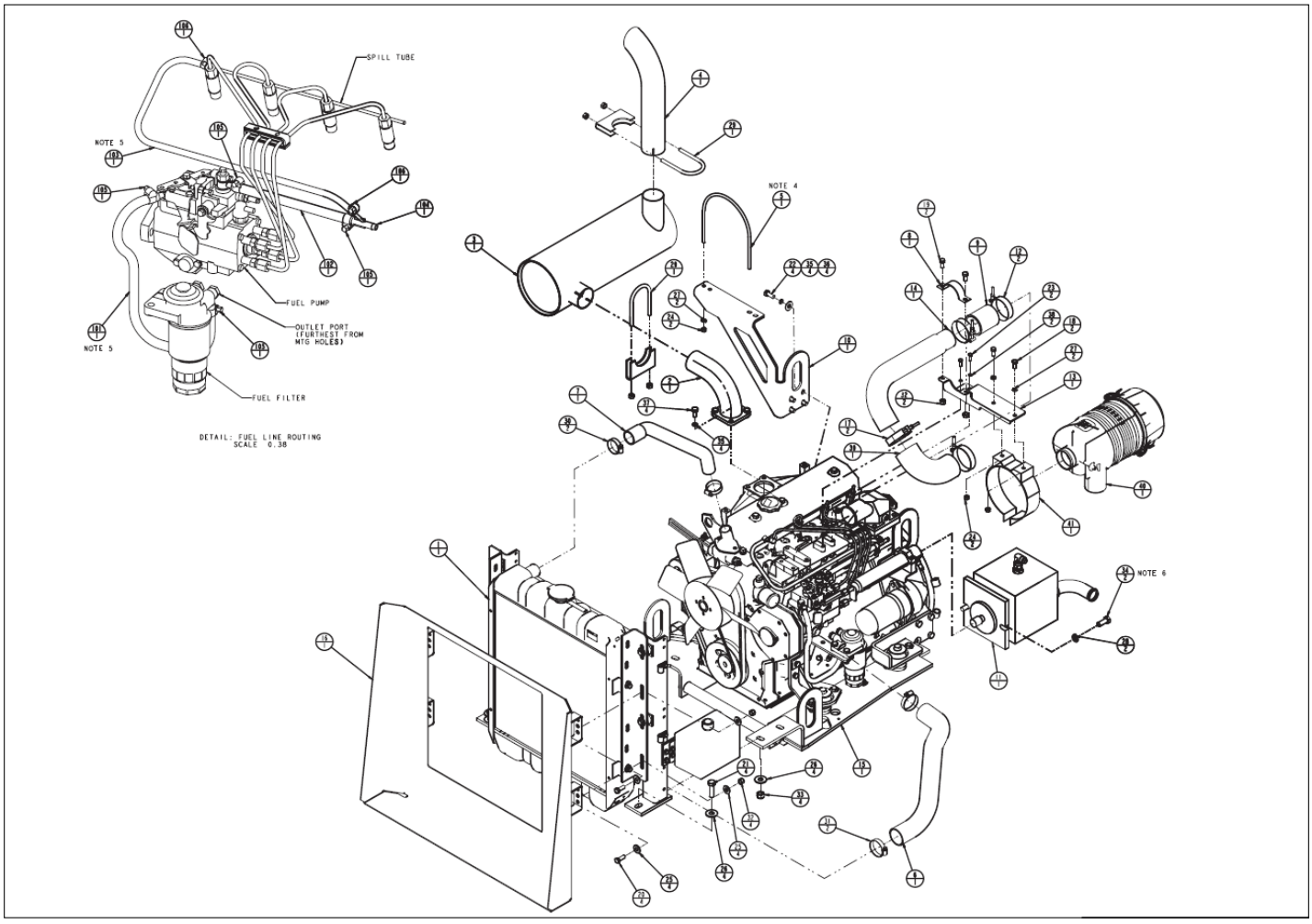

Courtesy of Crane.Market

Item	Part No.	Name	Qty	Uom
1	0074634	RADIATOR ASSEMBLY	1	EA
2	0074641	WLDMT EXHAUST ELB LONG	1	EA
3	0074644	MUFFLER	1	EA
4	0074645	TAIL PIPE	1	EA
5	0074664	MUFFLER CLAMPTB 42/50 CU 3.3	1	EA
6	0074684	HOSE LOWER RAD	1	EA
7	0074685	HOSE UPPER RAD	1	EA
8	0074687	CLAMP AIR INTAKE TUBE	1	EA
9	0074688	ADAPTER HOSE AIR INTAKE	1	EA
10	0074786	MUFFLER SUPPORT BRACKET	1	EA
11	0082138	PUMP SUB ASSEMBLY TB-A42/50 ALL	1	EA
12	0083165	CLAMP T-BOLT 2.75 NOM	2	EA
13	0083167	MT BRKT AIR CLEANER	1	EA
14	0083175	AIR CLEANER HOSE COUPLER 2.5-2.25	1	EA
15	0083445	ASSY ENG TRAY	1	EA
16	0083501	SHOURD WELDMENT CU	1	EA
17	0083544	CLAMP T-BOLT 3.00 NOM	2	EA
18	970239	BOLT HEXHD .313-18 .75 GR. 5	2	EA
19	970449	CAPSCREW 3/8-16 X 3/4 INCH LONG HEX HEAD GRADE 5	2	EA
20	970469	BOLT HEXHD .375-16 1.00 GR. 5	4	EA
21	970919	BLT HEXHD .500-13 1.75 GR5	4	EA
22	058493-025	HEX HEAD SCREW (M10 X 25)	4	EA
23	056058-018	HHCS M6 X 1 X 18 G8.8 ISO 4017_DIN 931	2	EA
24	984089	NUT HEX .313-18	4	EA
25	986299	BOLT HEXHD .313-18 2.50 GR. 5	8	EA

Courtesy of Crane.Market

Item	Part No.	Name	Qty	Uom
26	986359	WASHER 1/2 MEDIUM FLAT	8	EA
27	987109	WASHER LOCK .313	4	EA
28	987139	WASHER LOCK .500	2	EA
29	5550026	EXHAUST CLAMP	2	EA
30	5550038	CLAMP WORM DRIVE #28	2	EA
31	5550040	CLAMP	2	EA
32	5560033	NUT HEXHD .375-16 LKG	6	EA
33	5560039	NUT LKG .500-13	4	EA
34	5560136	CAPSCREW 1/2-13 SELF LOCKING DRILLED HEAD	2	EA
35	056021-010	WASHER LOCK M10 DIN127	8	EA
36	056069-010	WASHER FLAT M10	4	EA
37	058493-020	HHCS M10 X 1.5 X 20 GR8.8 DIN 933	4	EA
38	8056021-006	WASHER LOCK M6	2	EA
39	7630015	90DEG ELBOW	1	EA
40	7630755	AIR CLEANER	1	EA
41	7630759	BRACKET AIR CLEANER	1	EA
101	5010005	HOSE .38 831-6 PUSH LOCK	2.75'	EA
102	5010005	HOSE .38 831-6 PUSH LOCK	.75'	EA
103	5010027	HOSE .188 FUEL 50PSI	2.00'	EA
104	5093044	FTG TEE-6H-3H-6H NYLON	1	EA
105	5550006	CLAMP WORM DRIVER #6	4	EA
106	5550028	CLAMP	2	EA

Courtesy of Crane.Market

REPAIR PARTS

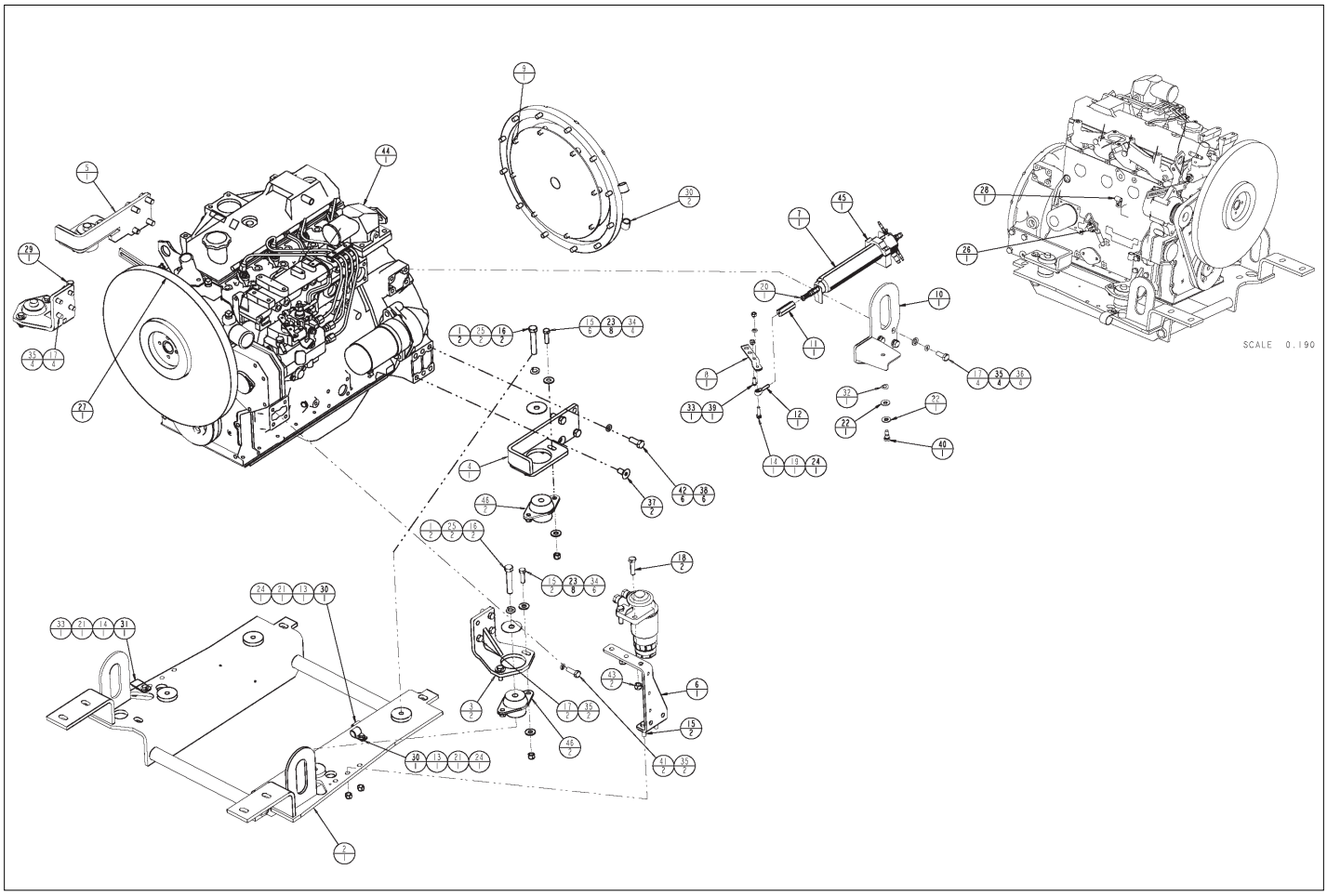

Courtesy of Crane.Market

Item	Part No.	Name	Qty	Uom
1	0070148	WASHER SPCL .531 X 2 X .06	4	EA
2	0074615	WLDMT ENG TRAY	1	EA
3	0074622	WELDMENT FRONT BRACKET	2	EA
4	0074625	WLDMT LEFT REAR BRKT	1	EA
5	0074628	WLDMT RIGHT REAR BRKT	1	EA
6	0074972	BRACKET, FUEL FILTER (CU)	1	EA
7	0082045	BRKT, FUEL FILTER (CU)	1	EA
8	0083155	THROTTLE LEVER EXTENSION	1	EA
9	0083437	KIT CPLG/FLYWHEEL CU TB60/PRO66	1	EA
10	0083570	THROTTLE ACTUATOR MT BRACKET WELDMENT	1	EA
11	0083586	THROTTLE ACTUATOR COUPLER	1	EA
12	0083587	ROD END	1	EA
13	970019	CAPSCREW 1/4-20 X 3/4 INCH LONG HEX HEAD GRADE 5	2	EA
14	970049	BOLT HEXHD .250-20 1.00 GR. 5	2	EA
15	970419	BOLT HEXHD .375-16 1.25 GR. 5	10	EA
16	971069	BLT HEXHD .500-13 2.75 GR5	4	EA
17	972019	BOLT 10MM- 1.50P 25MM GR5	10	EA
18	972049	BOLT 10MM- 1.50P 40MM GR8	2	EA
19	984069	NUT HEX .250-20	1	EA
20	984329	NUT JAM .250-20	1	EA
21	986019	WASHER FLAT .250	3	EA
22	986269	WASHER 5/16 MEDIUM FLAT	2	EA
23	986299	BOLT HEXHD .313-18 2.50 GR. 5	16	EA
24	98099	WASHER LOCK .250	3	EA
25	987139	WASHER LOCK .500	4	EA

Courtesy of Crane.Market

Item	Part No.	Name	Qty	Uom
26	3020095	SWITCH PRESSURE 6 PSI 1/8-27NPT	1	EA
27	3070037	TEMP SENSOR 1/2 NPT HIGH	1	EA
28	5093000	CLAMP	1	EA
29	5093002	CLAMP	1	EA
30	5093021	CUSHION CLAMP #8 (5/8")	4	EA
31	5093024	CLAMP	1	EA
32	5530017	WASHER SPR CRV .375	1	EA
33	5560004	NUT HEXHD .250-20 LKG	2	EA
34	5560033	NUT HEXHD .375-16 LKG	10	EA
35	5560356	WASHER LOCK M10	12	EA
36	5560364	WASHER FLAT M10	4	EA
37	5560598	BLT FLSKTHD M12 25.0	2	EA
38	5560614	WASHER LOCK M12	6	EA
39	5560615	BOLT BTNHD .25-20 .625	1	EA
40	5560618	BOLT SHOULDER .375 .375	1	EA
41	5560626	BOLT 10MM-1.50P 30MM	2	EA
42	5560631	BOLT 12MM -1.75P 30MM	6	EA
43	5560719	NUT LKG M10- 1.50	2	EA
44	7624766	ENGINE CUMMINS 3.3 (65 HP) T3 – AFTER APRIL 2007	1	EA
45	7630323	MOUNTING BLOCK	1	EA
46	7630707	ENGINE ISOLATOR	4	EA

Courtesy of Crane.Market

REPAIR PARTS

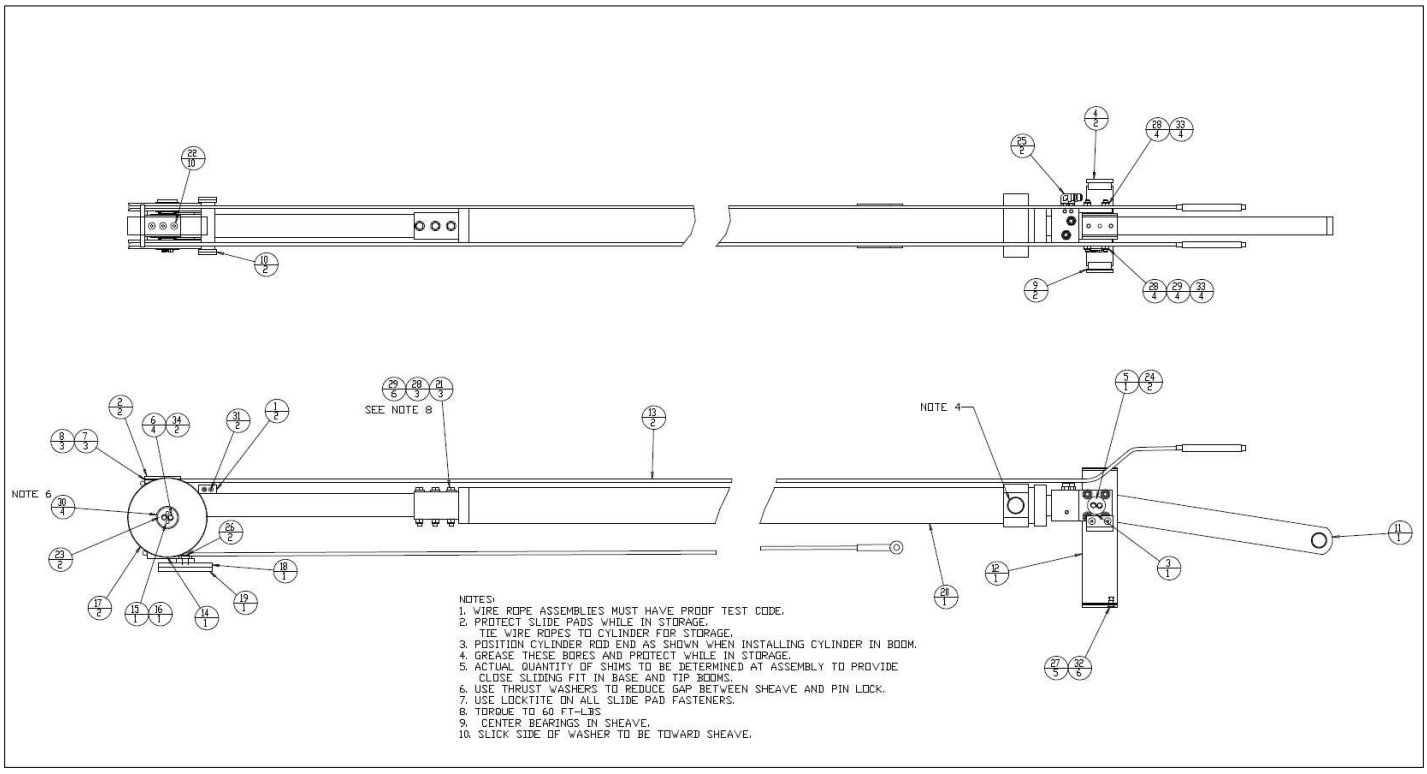

Courtesy of Crane.Market

Item	Part No.	Name	Qty	Uom
1	0070148	WASHER SPCL .531 X 2 X .06	4	EA
2	0074615	WLDMT ENG TRAY	1	EA
3	0074622	WELDMENT FRONT BRACKET	2	EA
4	0074625	WLDMT LEFT REAR BRKT	1	EA
5	0074628	WLDMT RIGHT REAR BRKT	1	EA
6	0082045	BRKT, FUEL FILTER (CU)	1	EA
7	0083155	THROTTLE LEVER EXTENSION	1	EA
8	0083437	KIT CPLG/FLYWHEEL CU TB60/PRO66	1	EA
9	7630707	ENGINE ISOLATOR	4	EA
10	0083529	FUEL FILTER MOUNT BRACKET	1	EA
11	0083570	THROTTLE ACTUATOR MT BRACKET WELDMENT	1	EA
12	0083586	THROTTLE ACTUATOR COUPLER	1	EA
13	0083587	ROD END	1	EA
14	970019	CAPSCREW 1/4-20 X 3/4 INCH LONG HEX HEAD GRADE 5	2	EA
15	970049	BOLT HEXHD .250-20 1.00 GR. 5	2	EA
16	970419	BOLT HEXHD .375-16 1.25 GR. 5	8	EA
17	971069	BLT HEXHD .500-13 2.75 GR5	4	EA
18	058493-025	HEX HEAD SCREW (M10 X 25)	10	EA
19	972049	BOLT 10MM- 1.50P 40MM GR8	2	EA
20	984069	NUT HEX .250-20	1	EA
21	984329	NUT JAM .250-20	1	EA
22	986019	WASHER FLAT .250	3	EA
23	986269	WASHER 5/16 MEDIUM FLAT	2	EA
24	986299	BOLT HEXHD .313-18 2.50 GR. 5	16	EA
25	987099	WASHER LOCK .250	3	EA

Courtesy of Crane.Market

Item	Part No.	Name	Qty	Uom
26	987139	WASHER LOCK .500	4	EA
27	3020095	SWITCH PRESSURE 6 PSI 1/8-27NPT	1	EA
28	3070037	TEMP SENSOR 1/2 NPT HIGH	1	EA
29	5093000	CLAMP	1	EA
30	5093002	CLAMP	1	EA
31	5093021	CUSHION CLAMP #8 (5/8")	4	EA
32	5093024	CLAMP	1	EA
33	5530017	WASHER SPR CRV .375	1	EA
34	5560004	NUT HEXHD .250-20 LKG	2	EA
35	5560033	NUT HEXHD .375-16 LKG	8	EA
36	056021-010	WASHER LOCK M10 DIN127	12	EA
37	056069-010	WASHER FLAT M10	4	EA
38	5560598	BLT FLSKTHD M12 25.0	2	EA
39	5560614	WASHER LOCK M12	6	EA
40	5560615	BOLT BTNHD .25-20 .625	1	EA
41	5560618	BOLT SHOULDER .375 .375	1	EA
42	058493-030	WASHER LOCK M12	2	EA
43	510581-030	CAPSCREW METRIC M12-1.75 X 20MM LONG HEX HEAD	6	EA
44	056064-010	NUT NYLOCK M10 DIN985 GR10.9 ZP	2	EA
45	7630323	MOUNTING BLOCK	1	EA
46	7620065	ENGINE CUMMINS 3.3 (65 HP) T3 – BEFORE APRIL 2007	1	EA
Not Shown	8036201	REPLACEMENT FUEL FILTER	1	EA
Not Shown	8036204	REPLACEMENT OIL FILTER	1	EA

Courtesy of Crane.Market

REPAIR PARTS

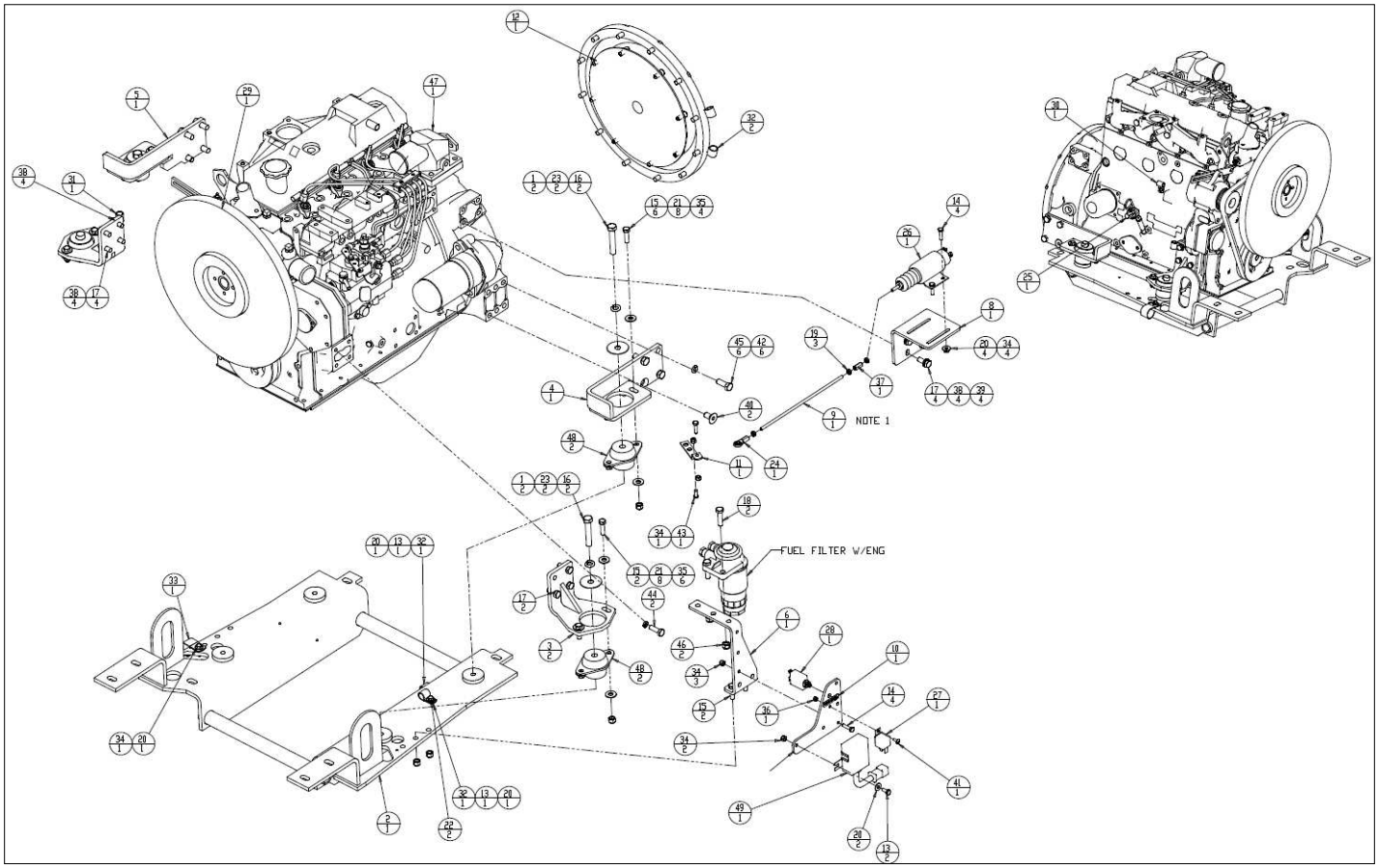

Courtesy of Crane.Market

Item	Part No.	Name	Qty	Uom
1	0070148	WASHER SPCL .531 X 2 X .06	4	EA
2	0074615	WLDMT ENG TRAY	1	EA
3	0074622	WELDMENT FRONT BRACKET	2	EA
4	0074625	WLDMT LEFT REAR BRKT	1	EA
5	0074628	WLDMT RIGHT REAR BRKT	1	EA
6	0082045	BRKT, FUEL FILTER (CU)	1	EA
7	0075560	BRKT, GLOW PLUG TIMER TB42/60/80	1	EA
8	0075623	BRKT, SOLENOID MOUNTING CU	1	EA
9	0075624	ALL THREAD .250-28	1	EA
10	0080914	PLACARD, GLOW PLUGS	1	EA
11	0083155	THROTTLE LEVER EXTENSION	1	EA
12	0083437	KIT CPLG/FLYWHEEL CU TB60/PRO66	1	EA
13	970019	CAPSCREW 1/4-20 X 3/4 INCH LONG HEX HEAD GRADE 5	4	EA
14	970049	BOLT HEXHD .250-20 1.00 GR. 5	8	EA
15	970419	BOLT HEXHD .375-16 1.25 GR. 5	10	EA
16	971069	BLT HEXHD .500-13 2.75 GR5	4	EA
17	972019	BOLT 10MM- 1.50P 25MM GR5	10	EA
18	058493-025	HEX HEAD SCREW (M10 X 25)	2	EA
19	984339	.250-28UNF JAM HEX NUT	3	EA
20	986019	WASHER FLAT .250	9	EA
21	986299	BOLT HEXHD .313-18 2.50 GR. 5	16	EA
22	987099	WASHER LOCK .250	2	EA
23	987139	WASHER LOCK .500	4	EA
24	2690004	FEMAIL ROD END	1	EA
25	3020095	SWITCH PRESSURE 6 PSI 1/8-27NPT	1	EA

Courtesy of Crane.Market

Item	Part No.	Name	Qty	Uom
26	3040174	SOLENOID, THROTTLE	1	EA
27	3040502	RELAY SPDT 12V 70AMP	1	EA
28	3041641	RELAY , 40 AMP	1	EA
29	3070037	TEMP SENSOR 1/2 NPT HIGH	1	EA
30	5093000	CLAMP	1	EA
31	5093002	CLAMP	1	EA
32	5093021	CUSHION CLAMP #8 (5/8")	4	EA
33	5093024	CLAMP	1	EA
34	5560004	NUT HEXHD .250-20 LKG	11	EA
35	5560033	NUT HEXHD .375-16 LKG	10	EA
36	056021-010	WASHER LOCK M10 DIN127	1	EA
37	056069-010	WASHER FLAT M10	1	EA
38	5560356	WASHER LOCK M10	12	EA
39	5560364	WASHER FLAT M10	4	EA
40	5560598	BLT FLSKTHD M12 25.0	2	EA
41	5560609	SCR TRHD 10-24 .50	1	EA
42	058493-030	WASHER LOCK M12	6	EA
43	510581-030	CAPSCREW METRIC M12-1.75 X 20MM LONG HEX HEAD	1	EA
44	056064-010	NUT NYLOCK M10 DIN985 GR10.9 ZP	2	EA
45	056065-030	BLT 12MM-1.75P 30MM	6	EA
46	5560719	NUT LKG M10- 1.50	2	EA
47	7624766	ENGINE CUMMINS 3.3 (65 HP) T3 – AFTER APRIL 2007	1	EA
Not Shown	8036201	REPLACEMENT FUEL FILTER	1	EA
Not Shown	8036204	REPLACEMENT OIL FILTER	1	EA
48	7630707	ENGINE ISOLATOR	4	EA
49	7630990	GLOW PLUG TIMER FOR CUMMINS ENGINE	1	EA

Courtesy of Crane.Market

REPAIR PARTS

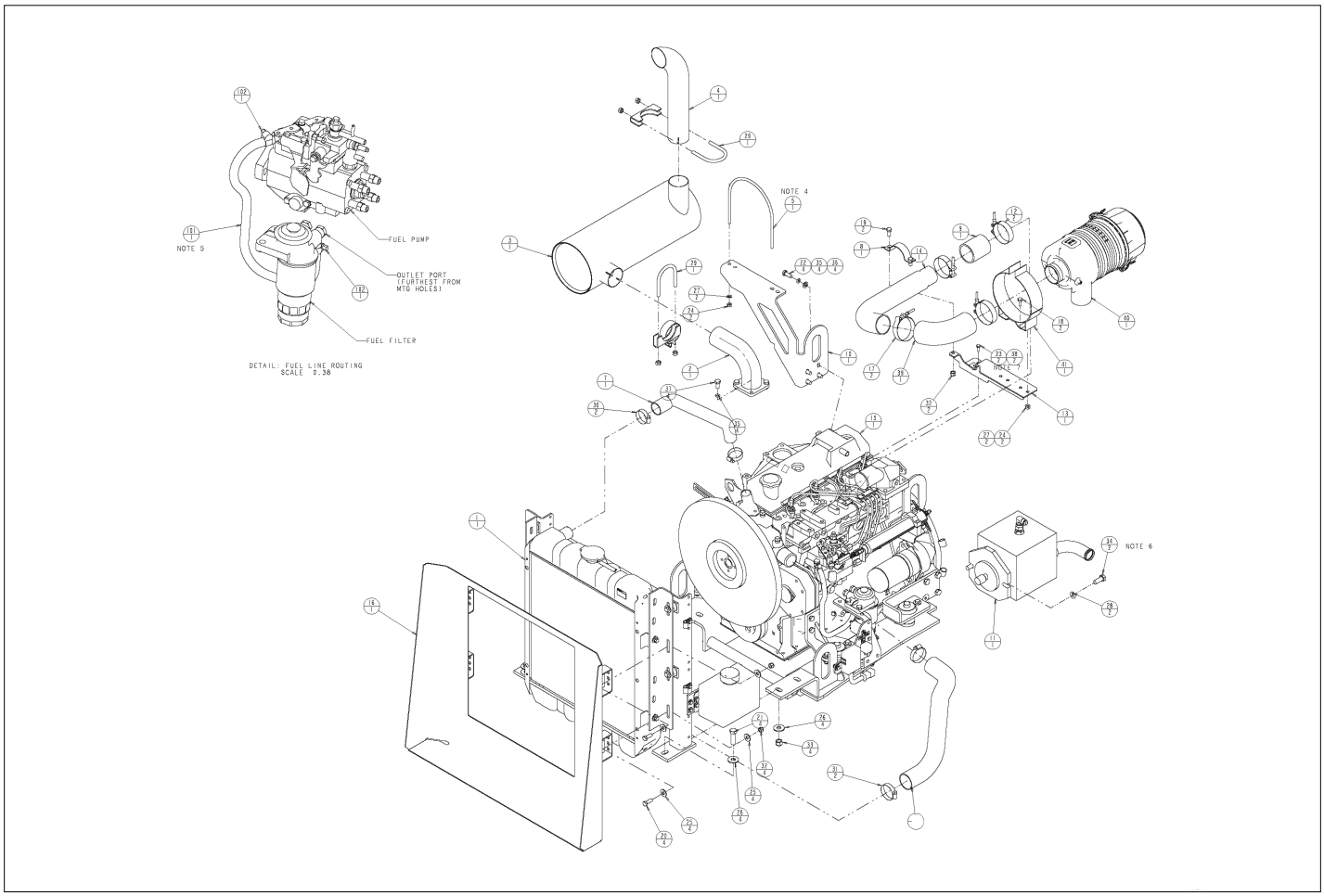

Courtesy of Crane.Market

Item	Part No.	Name	Qty	Uom
1	0074634	RADIATOR ASSEMBLY	1	EA
2	0074641	WLDMT EXHAUST ELB LONG	1	EA
3	0074644	MUFFLER	1	EA
4	0074645	TAIL PIPE	1	EA
5	0074664	MUFFLER CLAMPTB 42/50 CU 3.3	1	EA
6	0074684	HOSE LOWER RAD	1	EA
7	0074685	HOSE UPPER RAD	1	EA
8	0074687	CLAMP AIR INTAKE TUBE	1	EA
9	0074688	ADAPTER HOSE AIR INTAKE	1	EA
10	0074786	MUFFLER SUPPORT BRACKET	1	EA
11	0082138	PUMP SUB ASSEMBLY TB-A42/50 ALL	1	EA
12	0083165	CLAMP T-BOLT 2.75 NOM	2	EA
13	0083167	MT BRKT AIR CLEANER	1	EA
14	0083175	AIR CLEANER HOSE COUPLER 2.5-2.25	1	EA
15	0083445	ASSY ENG TRAY	1	EA
16	0083501	SHOURD WELDMENT CU	1	EA
17	0083544	CLAMP T-BOLT 3.00 NOM	2	EA
18	970239	BOLT HEXHD .313-18 .75 GR. 5	2	EA
19	970449	CAPSCREW 3/8-16 X 3/4 INCH LONG HEX HEAD GRADE 5	2	EA
20	970469	BOLT HEXHD .375-16 1.00 GR. 5	4	EA
21	970919	BLT HEXHD .500-13 1.75 GR5	4	EA
22	0058493-025	BLT 10MM-1.50P 25MM GR5	4	EA
23	056058-018	HHCS M6 X 1 X 18 G8.8 ISO 4017_DIN 931	2	EA
24	984089	NUT HEX .313-18	4	EA
25	986299	BOLT HEXHD .313-18 2.50 GR. 5	8	EA

Courtesy of Crane.Market

Item	Part No.	Name	Qty	Uom
26	986359	WASHER 1/2 MEDIUM FLAT	8	EA
27	987109	WASHER LOCK .313	4	EA
28	987139	WASHER LOCK .500	2	EA
29	5550026	EXHAUST CLAMP	2	EA
30	5550038	CLAMP WORM DRIVE #28	2	EA
31	5550040	CLAMP	2	EA
32	5560033	NUT HEXHD .375-16 LKG	6	EA
33	5560039	NUT LKG .500-13	4	EA
34	5560136	CAPSCREW 1/2-13 SELF LOCKING DRILLED HEAD	2	EA
35	056021-010	WASHER LOCK M10 DIN127	8	EA
36	056069-010	WASHER FLAT M10	4	EA
37	058493-020	HHCS M10 X 1.5 X 20 GR8.8 DIN 933	4	EA
38	8056021-006	WASHER LOCK M6	2	EA
39	7630015	90DEG ELBOW	1	EA
40	7630755	AIR CLEANER	1	EA
41	7630759	BRACKET AIR CLEANER	1	EA
101	5010005	HOSE .38 831-6 PUSH LOCK	2.75 FT	EA
102	5550006	CLAMP WORM DRIVER #6	2	EA

Courtesy of Crane.Market

REPAIR PARTS

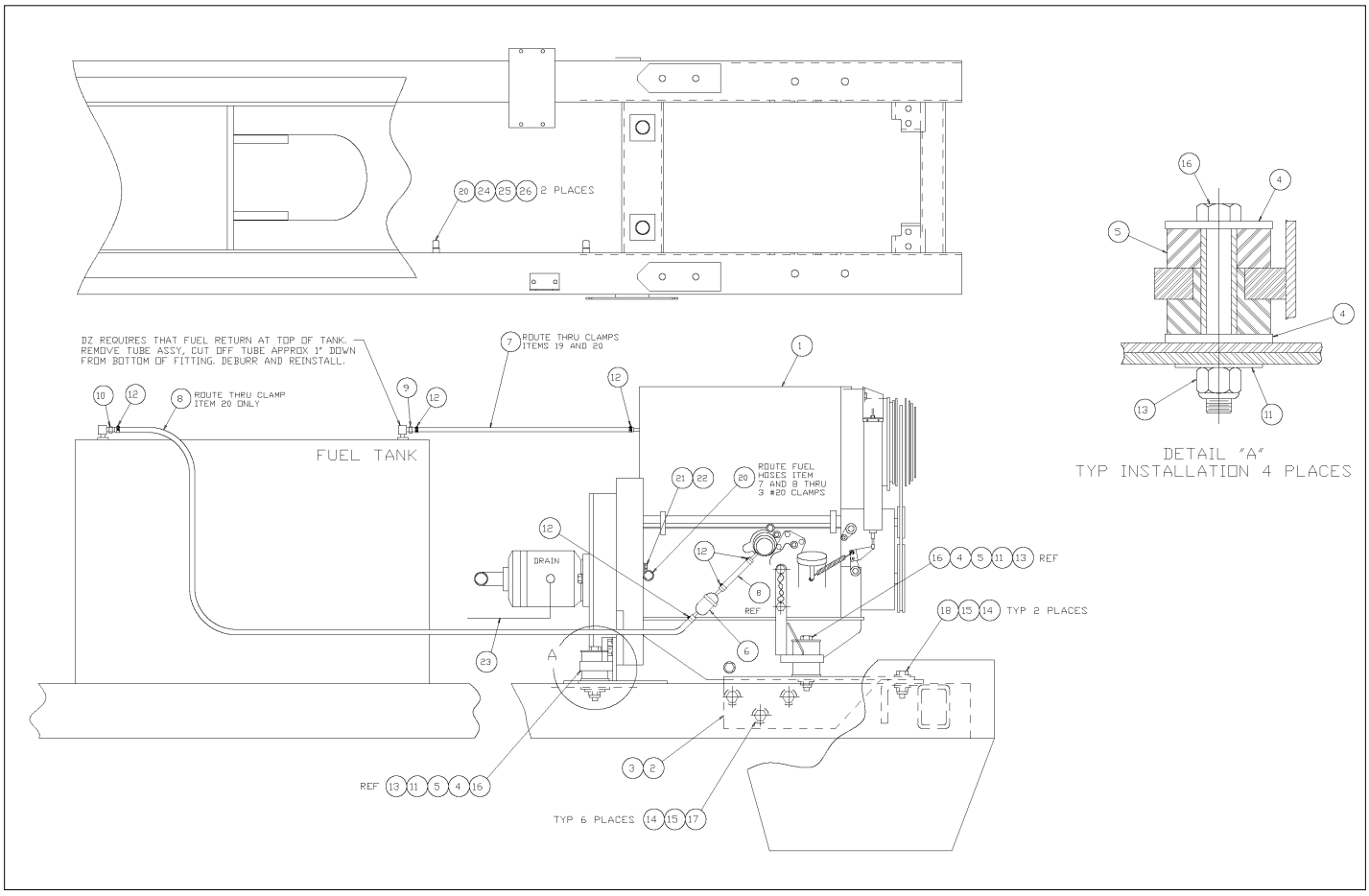

Courtesy of Crane.Market

Item	Part No.	Name	Qty	Uom
1	0082013	ENGINE, DEUTZ F4L-1011F DIESEL	1	EA
2	0081630-99	ENGINE MOUNT BRACKET, RIGHT HAND FRONT	1	EA
3	0081631-99	ENGINE MOUNT BRACKET, LEFT HAND FRONT	1	EA
4	0071599	WASHER	8	EA
5	7630130	MOUNT, ENGINE	1	EA
6	7630286	FILTER IN-LINE FUEL (SUPPLIED WITH ENGINE)	1	EA
7	0151786	FUEL HOSE	1	EA
8	5010011	HOSE SAE30R2-05 .312 FUEL	1	EA
9	5033604	ADAPTER STRAIGHT 1/4 NPTF TO -4 JIC	1	EA
10	5090032	ADAPTER, STRAIGHT BARBED	1	EA
11	5560169	WSHR HARD FLAT .625 SP	4	EA
12	5550028	CLAMP	5	EA
13	5560131	NUT .625-11 ESNA HIGH STRENGTH	4	EA
14	5560168	WSHR HARD FLAT .500 SP	16	EA
15	5560039	NUT LKG .500-13	8	EA
16	5560639	CAPSCREW 5/8-11 X 4-1/2 INCH LONG HEX HEAD GRADE 5	4	EA
17	970909	BOLT HEXHD .500-13 1.50 GR5	6	EA
18	970929	CAPSCREW 1/2-13 X 2 INCH LONG HEX HEAD GRADE 5	2	EA
19	5093002	CLAMP	1	EA
20	5093006	CLAMP	4	EA
21	5560638	BOLT HEXHD M8 X 1.25 X 16MM	1	EA
22	056021-008	WASHER LOCK M8	1	EA
23	0080522	HOSE- -8-8S-8S 42 100R2	1	EA
24	970009	BLT HEXHD .250-20 .500 GR5-	3	EA

Courtesy of Crane.Market

Item	Part No.	Name	Qty	Uom
25	986019	WASHER FLAT .250	3	EA
26	987099	WASHER LOCK .250	3	EA

Courtesy of Crane.Market

REPAIR PARTS

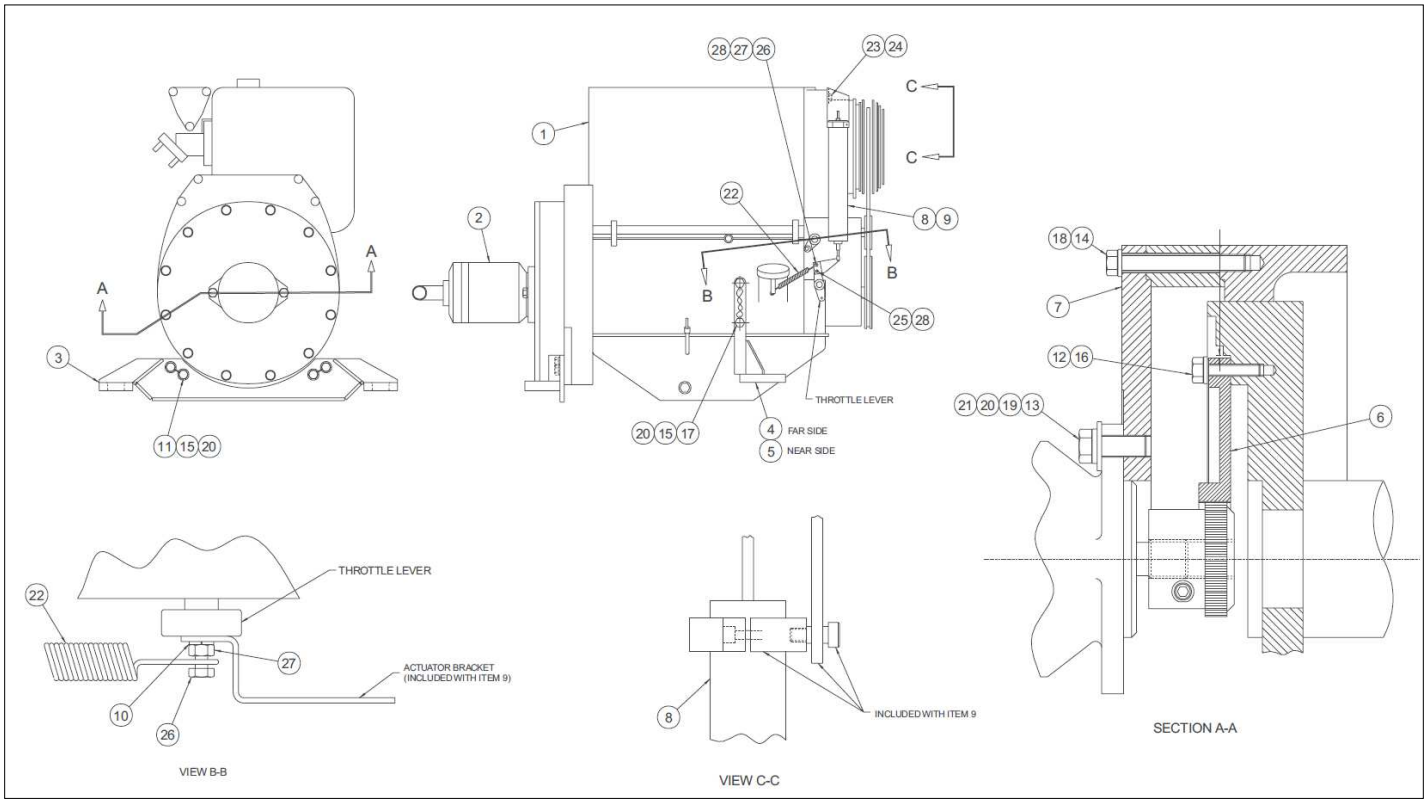

Courtesy of Crane.Market

Item	Part No.	Name	Qty	Uom
Not Shown	0082013	ENGINE, DEUTZ F4L-1011F DIESEL	1	EA
1	7620041	ENGINE, DEUTZ F4L-1011F DIESEL	1	EA
2	0082138	PUMP SUB ASSEMBLY TB-A42/50 ALL	1	EA
3	0081624	WELDMENT MOTOR MOUNT REAR	1	EA
4	0081619	MOTOR MOUNT-R/H FRONT	1	EA
5	0081614	MOTOR MOUNT-L/H FRONT	1	EA
6	7630249	FLEXIBLE COUPLING – BEFORE 3-20-01	1	EA
Not Shown	7630776	ENGINE PUMP MOUNT – BEFORE 3-20-01	1	EA
7	0081226	ENGINE ADAPTER	1	EA
Not Shown	7630779	FLEXIBLE COUPLING	1	EA
8	0082045	BRKT, FUEL FILTER (CU)	1	EA
9	7630311	KIT, ADDCO THROT ACTUATOR HDWR	1	EA
10	5560664	WASHER METRIC M6 LOCK	1	EA
11	5560207	BOLT 14MM-2.00P 30MM GR8.8 DH	4	EA
12	986299	BOLT HEXHD .313-18 2.50 GR. 5	6	EA
13	987139	WASHER LOCK .500	2	EA
14	056021-010	WASHER LOCK M10 DIN127	8	EA
15	5560377	WASHER LOCK M14	8	EA
16	058493-030	WASHER LOCK M12	6	EA
17	5560028	BLT HEXHD M6-1.00 25mm	4	EA
18	5560653	BLT HEXHD M10-1.50 X 85MM DIN 931 GR8.8 ZY	8	EA
19	5560168	WSHR HARD FLAT .500 SP	2	EA

Courtesy of Crane.Market

Item	Part No.	Name	Qty	Uom
20	9980012	.040 INCH DIAMETER STAINLESS STEEL SAFETY LOCKWIRE -(SOLD IN ONE POUND CAN)	1	EA
21	5560136	CAPSCREW 1/2-13 SELF LOCKING DRILLED HEAD	2	EA
22	810246	SPRING – INCLUDED WITH ACTUATOR KIT 20082045	1	EA
23	5560638	BOLT HEXHD M8 X 1.25 X 16MM	2	EA
24	056021-008	WASHER LOCK M8	2	EA
25	5560628	BOLT HEXHD M6 X 1.0 X 12MM	1	EA
26	056067-006	NUT METRIC M6-1.0 HEX	2	EA
Not Shown	8040198	FUEL FILTER 0.4 L SPIN-ON CARTRIDGE – ITEM NOT SHOWN	1	EA
Not Shown	8040201	ALTERNATOR, 14V, 60A – ITEM NOT SHOWN	1	EA
Not Shown	8040207	OIL PRESSURE SWITCH 0.5 BAR, NORMALLY CLOSED – ITEM NOT SHOWN	1	EA

Courtesy of Crane.Market

REPAIR PARTS

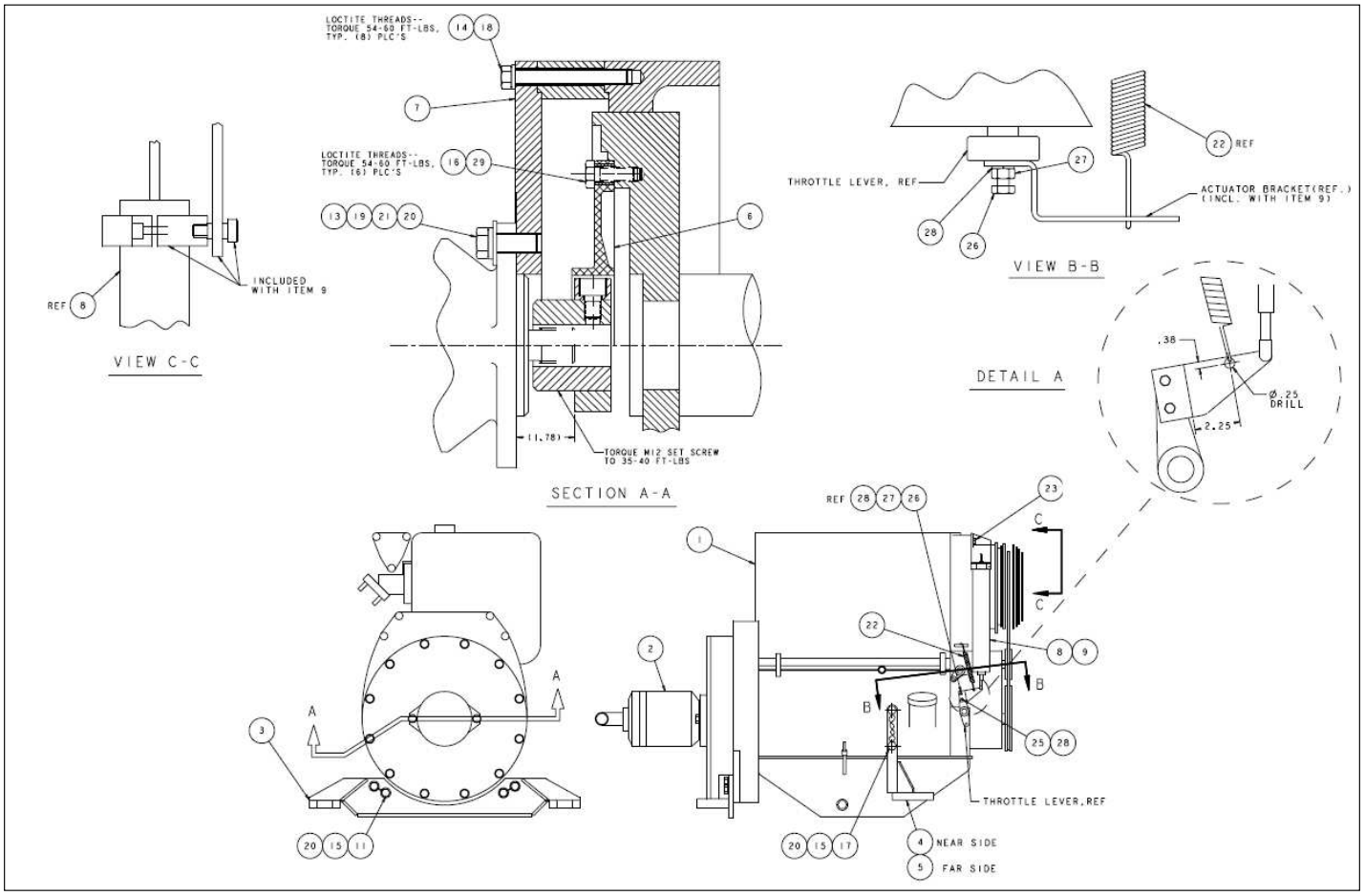

Courtesy of Crane.Market

Item	Part No.	Name	Qty	Uom
1	7624750	ENGINE DUETZ F4L-2011F	1	EA
2	0082138	PUMP SUB ASSEMBLY TB-A42/50 ALL	1	EA
3	0081624	WELDMENT MOTOR MOUNT REAR	1	EA
4	0081619	MOTOR MOUNT-R/H FRONT	1	EA
5	0081614	MOTOR MOUNT-L/H FRONT	1	EA
6	7630779	FLEXIBLE COUPLING	1	EA
7	0081226	ENGINE ADAPTER	1	EA
8	0162698	SUBASSEMBLY ACTUATOR	1	EA
9	7630311	KIT, ADDCO THROT ACTUATOR HDWR	1	EA
11	5560207	BOLT 14MM-2.00P 30MM GR8.8 DH	4	EA
12	PNNA	WASHER FLAT .375	6	EA
13	PNNA	WASHER LOCK .500 MDM	2	EA
14	PNNA	WASHER LOCK M10	8	EA
15	PNNA	WASHER LOCK M14	8	EA
16	PNNA	BLT HEXHD M10-1.5 X 30MM GR8	14	EA
17	5560228	BOLT HEXHD M14 X 2 X 50MM DRILLED	4	EA
18	PNNA	NUT HEX 1/4-28	2	EA
19	PNNA	WASHER FLAT .500 HVY	2	EA
20	PNNA	.040 STNLS STL LOCKWIRE	AR	EA
21	5560136	CAPSCREW 1/2-13 SELF LOCKING DRILLED HEAD	2	EA
22	0080825	SPRING CHOKE (INCL. W/ ACTUATOR)	REF	EA
23	PNNA	BLT HEXHD M8-1.25 X 16MM	2	EA
25	PNNA	BLT HEXHD M6-1.0 X 18MM	1	EA
26	PNNA	CAPSCREW, 1/4-20 X 1" LG HEXHD GR5	4	EA

Courtesy of Crane.Market

Item	Part No.	Name	Qty	Uom
27	PNNA	NUT , 1/4-20 ESNA	4	EA
28	PNNA	WASHER 1/4 FLAT	4	EA
29	5560364	WASHER FLAT M10	6	EA
30	PNNA	LOCTITE (#242-BLUE)	AR	EA
Not Shown	8040198	FUEL FILTER 0.4 L SPIN-ON CARTRIDGE – ITEM NOT SHOWN	1	EA
Not Shown	8040201	ALTERNATOR, 14V, 60A – ITEM NOT SHOWN	1	EA
Not Shown	8040207	OIL PRESSURE SWITCH 0.5 BAR, NORMALLY CLOSED – ITEM NOT SHOWN	1	EA

Courtesy of Crane.Market

REPAIR PARTS

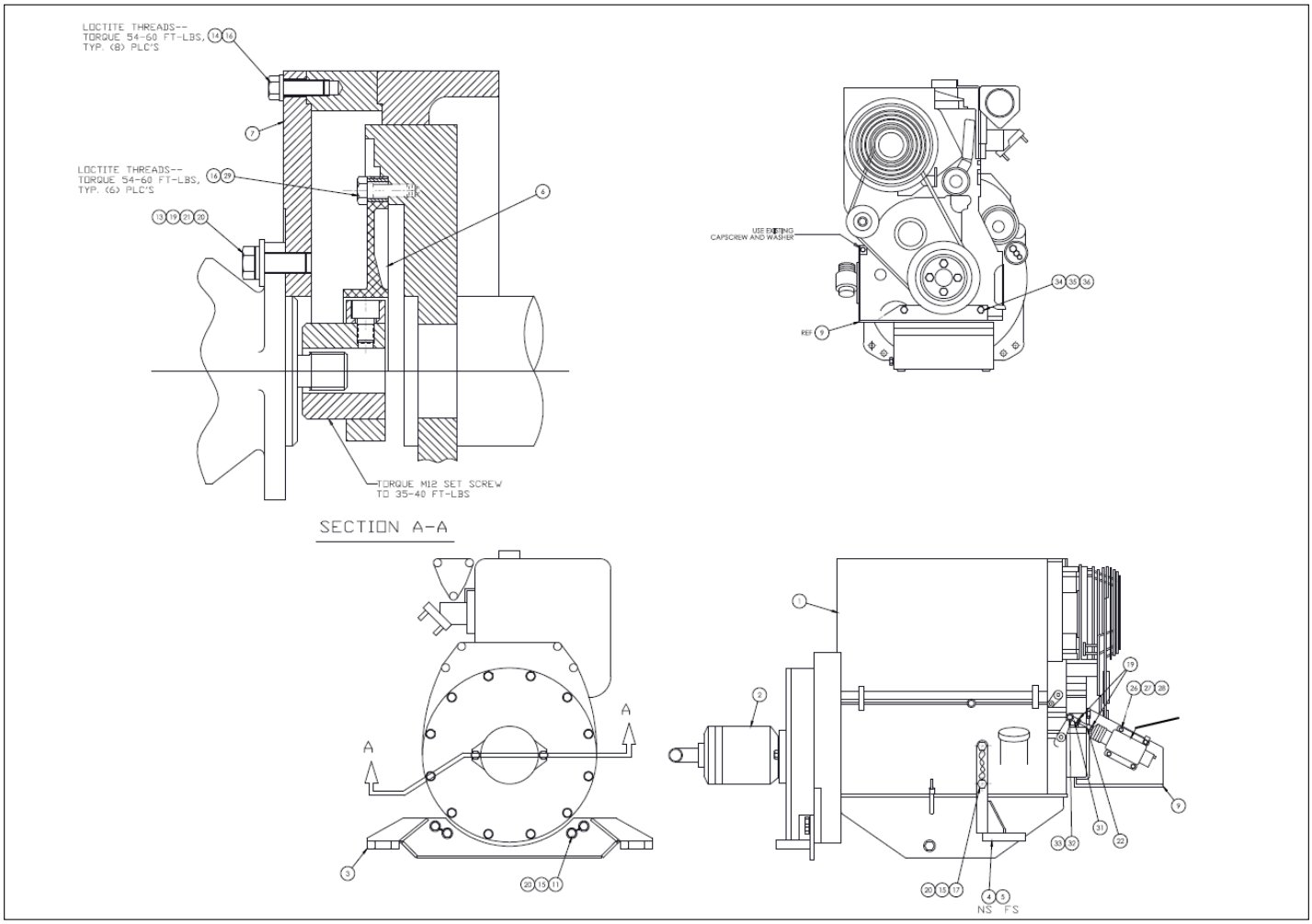

Courtesy of Crane.Market

Item	Part No.	Name	Qty	Uom
1	7624750	ENGINE DUETZ F4L-2011F	1	EA
2	0082138	PUMP SUB ASSEMBLY TB-A42/50 ALL	1	EA
3	0084233	WELDMENT MOTOR MOUNT REAR	1	EA
4	0084235	MOTOR MOUNT R/H FRONT	1	EA
5	0084228	MOTOR MOUNT L/H FRONT	1	EA
6	7630779	FLEXIBLE COUPLING	1	EA
7	0081226	ENGINE ADAPTER	1	EA
8	3040174	SOLENOID, THROTTLE	1	EA
9	0075621	BRKT, SOLENOID MOUNTING	1	EA
10	0075622	SPCR, SOLENOID MOUNTING	2	EA
11	5560207	BOLT 14MM-2.00P 30MM GR8.8 DH	4	EA
12	986299	BOLT HEXHD .313-18 2.50 GR. 5	6	EA
13	987139	WASHER LOCK .500	2	EA
14	056021-010	WASHER LOCK M10 DIN127	8	EA
15	056021-014	WASHER LOCK M14	8	EA
16	058493-030	WASHER LOCK M12	14	EA
17	5560228	BOLT HEXHD M14 X 2 X 50MM DRILLED	4	EA
18	982129	NUT 1/4-28 HEX	2	EA
19	5560168	WSHR HARD FLAT .500 SP	2	EA
20	PNNA	.040 STNLS STL LOCKWIRE	AR	EA
21	5560136	CAPSCREW 1/2-13 SELF LOCKING DRILLED HEAD	2	EA
22	2650001	INLINE SWIVEL SYNCHRO START #SA-2727	1	EA
23	056059-016	HHCS M8 X 1.25 X 16 G8.8 ISO 4017_DIN 931	2	EA
25	056058-018	HHCS M6 X 1 X 18 G8.8 ISO 4017_DIN 931	1	EA

Courtesy of Crane.Market

Item	Part No.	Name	Qty	Uom
26	970069	BOLT .25-20 1.25 GR5	4	EA
27	5560004	NUT HEXHD .250-20 LKG	4	EA
28	986019	WASHER FLAT .250	4	EA
29	056069-010	WASHER FLAT M10	6	EA
30	PNNA	LOCTITE (#242-BLUE)	AR	EA
31	2690004	FEMAIL ROD END	1	EA
32	058491-020	CAPSCREW M6 X 1 X 20MM LG	1	EA
33	056021-006	WASHER LOCK M6 DIN 127	1	EA
34	058492-020	HEX HEAD SCREW (M8 X 20)	2	EA
35	056021-008	WASHER LOCK M8	4	EA
36	056069-008	M8 FLAT WASHER DIN 125	2	EA
Not Shown	8040198	FUEL FILTER 0.4 L SPIN-ON CARTRIDGE – ITEM NOT SHOWN	1	EA
Not Shown	8040201	ALTERNATOR, 14V, 60A – ITEM NOT SHOWN	1	EA
Not Shown	8040207	OIL PRESSURE SWITCH 0.5 BAR, NORMALLY CLOSED – ITEM NOT SHOWN	1	EA

Courtesy of Crane.Market

REPAIR PARTS

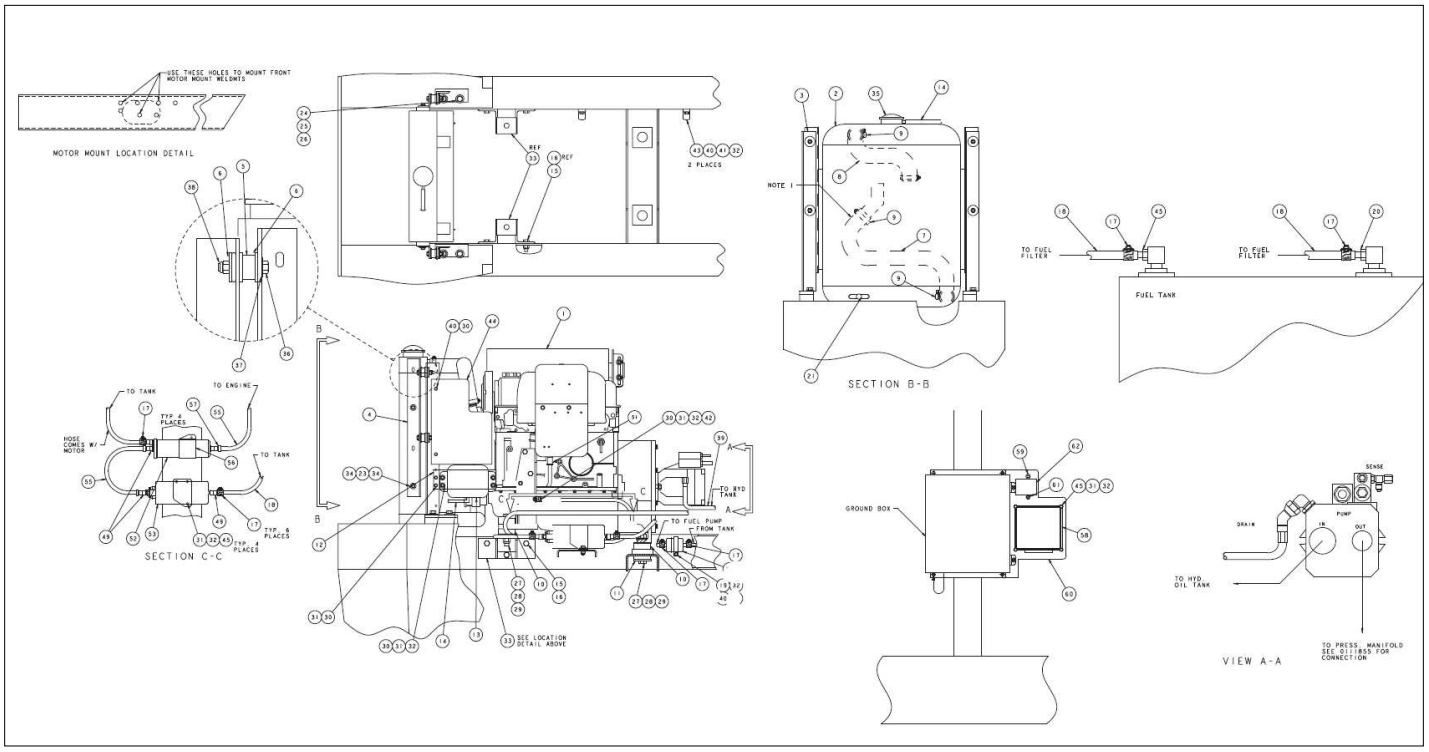

Courtesy of Crane.Market

Item	Part No.	Name	Qty	Uom
1	0083368	ENGINE SUB ASSY	1	EA
2	7630677	RADIATOR	1	EA
3	0180441	WELDMENT RADIATOR SUPPORT	2	EA
4	0081860	ANGLE RADIATOR MTG TB-A60 FO	2	EA
5	7630180	RADIATOR CUSHION	4	EA
6	5560179	WASHER SPCL FLAT	8	EA
7	7630332	RADIATOR HOSE, LOWER	1	EA
8	7630749	RADIATOR HOSE, UPPER	1	EA
9	55500030	CLAMP	4	EA
10	7630117	ENGINE MOUNT	4	EA
11	0071599	WASHER	8	EA
12	0180832	MTG PLATE OVERFLOW BOTTLE	1	EA
13	7630227	BOTTLE 2QT OVERFLOW	1	EA
14	5010012	5/16"I.D. HOSE	5FT	EA
15	PNNA	CAPSCREW 1/2-13 X 1-1/2" LG H.H.	6	EA
16	PNNA	NUT 1/2-13 ESNA	6	EA
17	5550028	CLAMP	6	EA
18	5010011	HOSE SAE30R2-05 .312 FUEL	10FT	EA
19	5093012	CUSHION CLAMP #28 (1-3/4")	1	EA
20	5090032	ADAPTER, STRAIGHT BARBED	1	EA
21	PNNA	DRAIN COCK (INCL WITH ITEM 2)	REF	EA
22	PNNA	CAPSCREW 5/16-18 X 3/4" LG H.H.	4	EA
23	PNNA	LOCKWASHER 5/16" MED	4	EA
24	PNNA	CAPSCREW 1/2-13 X 1" LG H.H.	4	EA
25	PNNA	FLATWASHER 1/2"	4	EA
26	PNNA	LOCKWASHER 1/2" MED	4	EA

Courtesy of Crane.Market

Item	Part No.	Name	Qty	Uom
27	PNNA	CAPSCREW 5/8-11 X 4-1/2" LG H.H.	4	EA
28	5560169	WSHR HARD FLAT .625 SP	4	EA
29	PNNA	NUT 5/8-11 ESNA	4	EA
30	PNNA	CAPSCREW 1/4-20 X 1" LG H.H.	14	EA
31	PNNA	NUT 1/4-20 ESNA	16	EA
32	PNNA	FLATWASHER 1/4"	11	EA
33	0081464	MOUNTING FRAME TRNTBL MOD	2	EA
34	PNNA	FLATWASHER 5/16"	4	EA
35	7630239	RADIATOR CAP 13 PSI	1	EA
36	PNNA	CAPSCREW 3/8-16 X 2-1/4" LG H.H.	4	EA
37	PNNA	FLATWASHER 3/8"	4	EA
38	PNNA	NUT 3/8-16 ESNA	4	EA
39	0070792	HOSE -8-8S-8S 32 100R2	1	EA
40	PNNA	CAPSCREW, 1/4-20 X 3/4" LG H.H. GR5	8	EA
41	PNNA	WASHER, 1/4 MEDIUM LOCK	4	EA
42	5093008	CLIP CUSSION 1.05 VINYL COATED	1	EA
43	5093004	CLAMP	2	EA
44	0181154	SHIELD, ALTERNATOR ATB-60	1	EA
45	5093037	FTG STR-4H-4N BR	1	EA
49	7630678	FUEL LINE CONNECTOR - (INCLUDED WITH ENGINE)	REF	EA
50	7630679	FUEL LINE CONNECTOR	REF	EA
51	7630680	FUEL LINE CONNECTOR	REF	EA
52	7630681	PRESSURE REGULATOR	REF	EA
53	7630682	FUEL PUMP	REF	EA
54	7630683	FUEL FILTER	REF	EA
55	7630686	HIGH PRESSURE HOSE	REF	EA

Courtesy of Crane.Market

Item	Part No.	Name	Qty	Uom
56	7630685	PRESSURE REGULATOR CLAMP	REF	EA
57	7630691	FUEL LINE CLAMP	REF	EA
58	7630687	ENGINE CONTROL MODULE	REF	EA
59	7630688	INDICATOR LAMP	1	EA
60	0112093	ECM MOUNTING BRACKET	1	EA
61	3020081	SWITCH TOGGLE DPDT (M/NONE/ON) SEALED	1	EA
62	0112092	DECAL	1	EA

Courtesy of Crane.Market

REPAIR PARTS

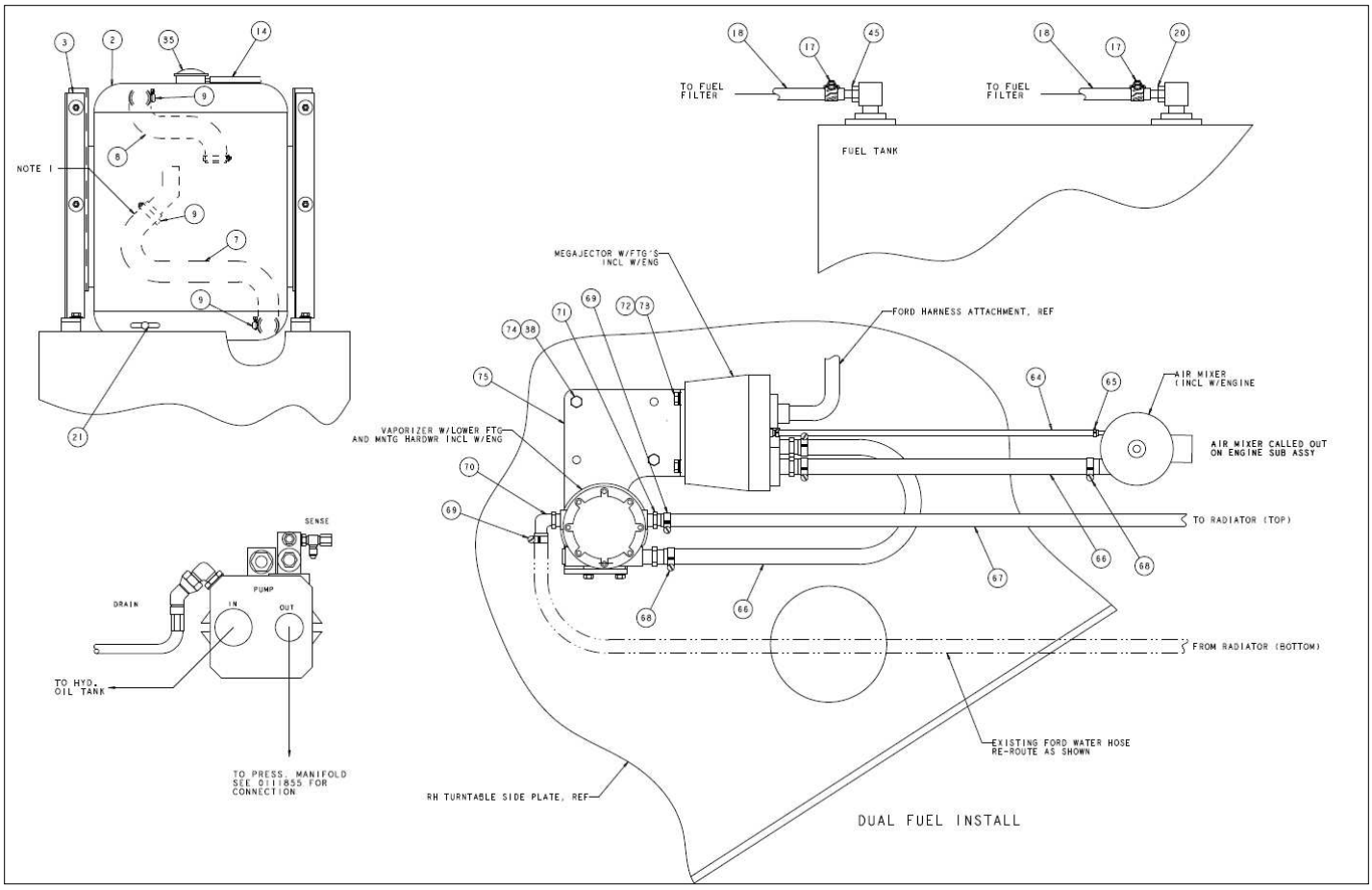

Courtesy of Crane.Market

Item	Part No.	Name	Qty	Uom
1	0083938	ENG SUB ASSY TB60/66J (FO)	1	EA
2	7630677	RADIATOR	1	EA
3	0180441	WELDMENT RADIATOR SUPPORT	2	EA
4	0081860	ANGLE RADIATOR MTG TB-A60 FO	2	EA
5	7630180	RADIATOR CUSHION	4	EA
6	5560179	WASHER SPCL FLAT	8	EA
7	7630332	RADIATOR HOSE, LOWER	1	EA
8	7630749	RADIATOR HOSE, UPPER	1	EA
9	5550030	CLAMP	4	EA
10	7630117	ENGINE MOUNT	4	EA
11	0071599	WASHER	8	EA
12	0180832	MTG PLATE OVERFLOW BOTTLE	1	EA
13	7630227	BOTTLE 2QT OVERFLOW	1	EA
14	5010012	5/16"I.D. HOSE	5 FT	EA
15	9070909	BLT HEXHD .500-13 1.50 GR5-PLA	6	EA
16	5560039	NUT LKG .500-13	6	EA
17	5550028	CLAMP	6	EA
18	5010011	HOSE SAE30R2-05 .312 FUEL	10 FT	EA
19	5093012	CUSHION CLAMP #28 (1-3/4")	1	EA
20	5090032	ADAPTER, STRAIGHT BARBED	1	EA
21	PNNA	DRAIN COCK (INCL WITH ITEM 2)	REF	EA
22	970239	BOLT HEXHD .313-18 .75 GR. 5	4	EA
23	987109	WASHER LOCK .313	4	EA
24	970889	CAPSCREW 1/2-13 X 1 INCH LONG HEX HEAD GRADE 5	4	EA
25	986359	WASHER 1/2 MEDIUM FLAT	4	EA
26	987139	WASHER LOCK .500	4	EA

Courtesy of Crane.Market

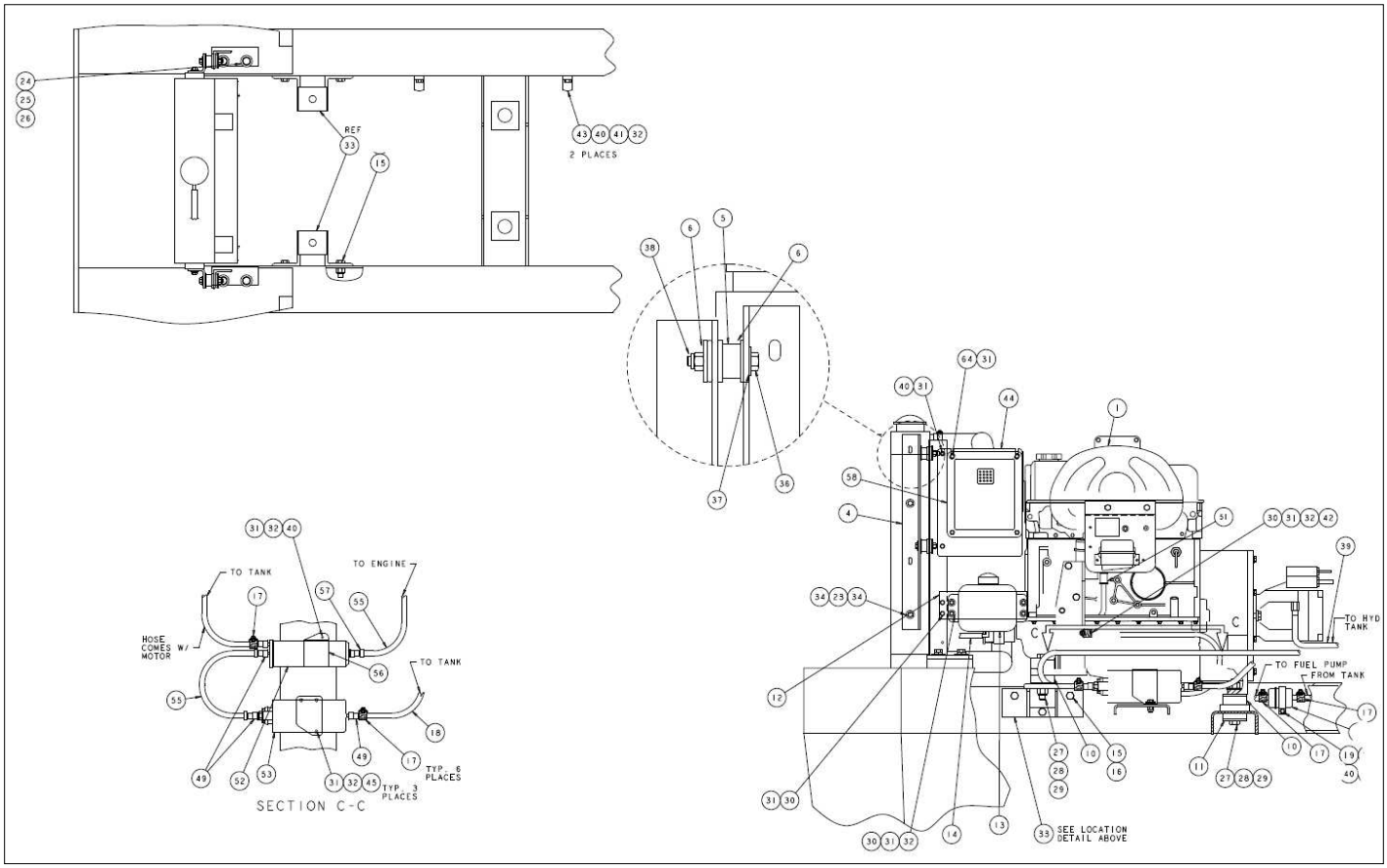

Courtesy of Crane.Market

Item	Part No.	Name	Qty	Uom
27	5560639	CAPSCREW 5/8-11 X 4-1/2 INCH LONG HEX HEAD GRADE 5	4	EA
28	5560169	WSHR HARD FLAT .625 SP	4	EA
29	5560036	NUT 5/8-11 SELF LOCKING	4	EA
30	5560086	SCR HEXHD .25-20 1.00 W/SEMS	14	EA
31	5560004	NUT HEXHD .250-20 LKG	16	EA
32	986019	WASHER FLAT .250	11	EA
33	0081464	MOUNTING FRAME TRNTBL MOD	2	EA
34	986269	WASHER 5/16 MEDIUM FLAT	4	EA
35	7630239	RADIATOR CAP 13 PSI	1	EA
36	970519	BOLT HEXHD .375-16 2.25 GR. 5	4	EA
37	986299	BOLT HEXHD .313-18 2.50 GR. 5	4	EA
38	5560033	NUT HEXHD .375-16 LKG	4	EA
39	0070792	HOSE -8-8S-8S 32 100R2	1	EA
40	970029	CAPSCREW 1/4-20 X 3/4 INCH LONG HEX HEAD GRADE 5	8	EA
41	987099	WASHER LOCK .250	4	EA
42	5093008	CLIP CUSSION 1.05 VINYL COATED	1	EA
43	5093004	CLAMP	2	EA
44	0083783	MOUNT PLATE, EPM	1	EA
45	5093037	FTG STR-4H-4N BR	1	EA
46	970059	CAPSCREW 1/4-20 X 1-1/2 INCH LONG HEX HEAD GRADE 5	3	EA
49	7630678	FUEL LINE CONNECTOR - (INCLUDED WITH ENGINE)	REF	EA
50	7630679	FUEL LINE CONNECTOR	REF	EA
51	7630680	FUEL LINE CONNECTOR	REF	EA
52	7630681	PRESSURE REGULATOR	REF	EA

Courtesy of Crane.Market

Item	Part No.	Name	Qty	Uom
53	76306842	FUEL PUMP – INCLUDED WITH ENGINE	REF	EA
54	7630683	FUEL FILTER	REF	EA
55	7630686	HIGH PRESSURE HOSE	REF	EA
56	7630685	PRESSURE REGULATOR CLAMP	REF	EA
57	7630691	FUEL LINE CLAMP	REF	EA
58	PNNA	ENGINE CONTROL MODULE – INCLUDED WITH ENGINE	REF	EA
63	969989	BOLT HEXHD .250-20 1.75 GR. 5	4	EA
64	5010006	HOSE VACUUM .25 ID 6MM	3 FT	EA
65	5090026	CLP HOSE .187 SPRING (VACUUM)	2	EA
66	5018829	HOSE .75 ID LPG	5 FT	EA
67	5010020	EMISSION CONTROL HOSE 5/8 INCH DIAMETER	6 FT	EA
68	5550020	CLP WORM DRV .75-1.75 SAE#20	4	EA
69	5550010	CLAMP	2	EA
70	5098336	FTG ELB 90 HOSE BEAD-10-6N BR	1	EA
71	5098335	FTG STR HOSE BEAD-10-6N BR	1	EA
72	5560698	BLT HEXHD M6 20MM	4	EA
73	5563051	WASHER SPRING LOCK M6 FASTENAL 40381	4	EA
74	5560531	BLT CRG .375-16 1.50	2	EA
75	0083915	BRKT DUAL FUEL (FO)	1	EA

Courtesy of Crane.Market

REPAIR PARTS

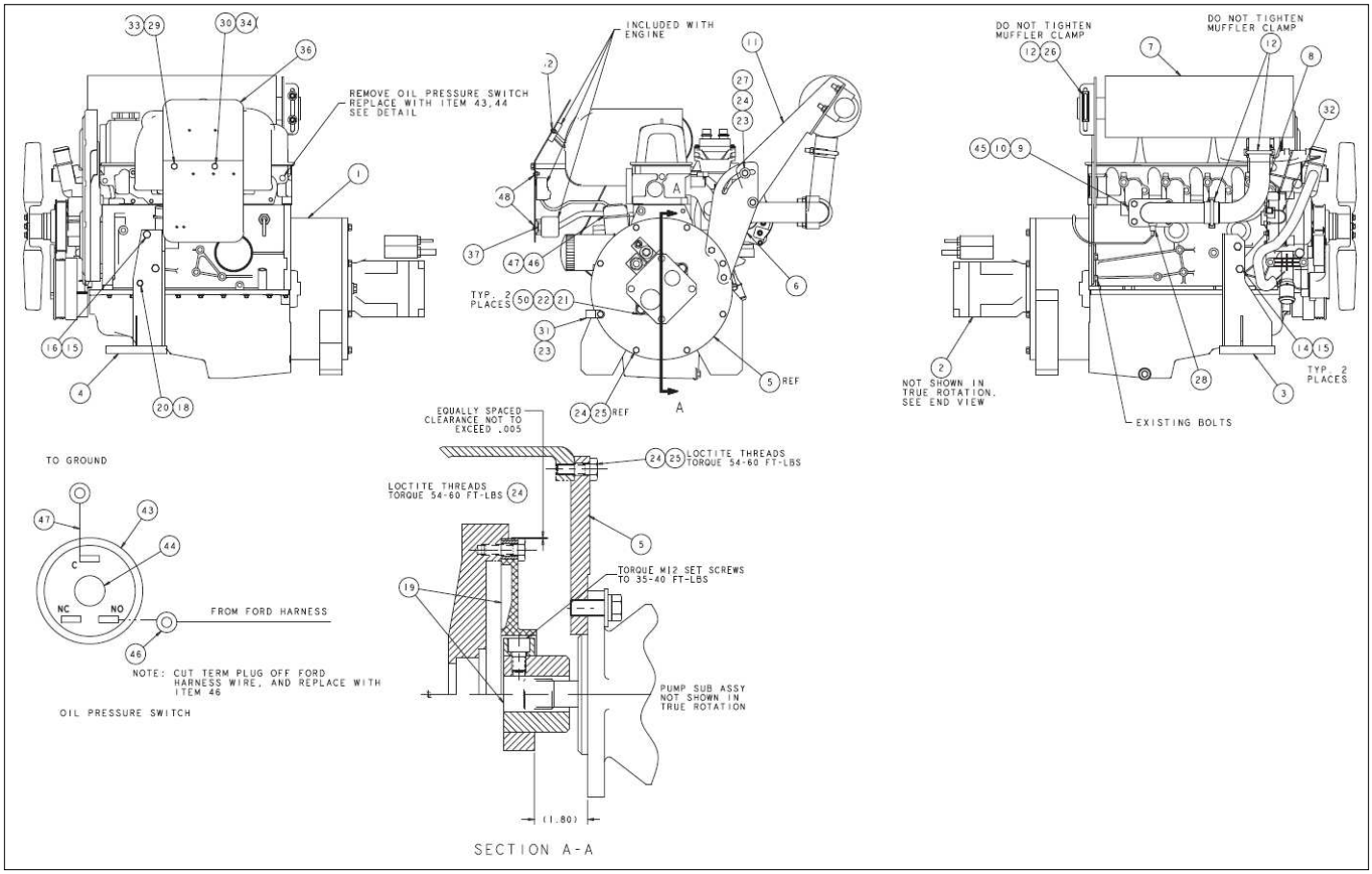

Courtesy of Crane.Market

Item	Part No.	Name	Qty	Uom
1	7620055	ENGINE FORD LRG-425	1	EA
2	0082138	PUMP SUB ASSEMBLY TB-A42/50 ALL	1	EA
3	0111838	R.H. MOTOR MOUNT WELDMENT	1	EA
4	0111839	L.H. MOTOR MOUNT WELDMENT	1	EA
5	7630777	PLATE-ENGINE PUMP MOUNT (FORD)	1	EA
6	0181535	BRACKET, LOWER - EXHAUST	1	EA
7	7630255	MUFFLER	1	EA
8	0181453	PIPE	1	EA
9	0112088	EXHAUST FLANGE WELDMENT LRG FORD	1	EA
10	PNNA	EXHAUST GASKET (INCLUDED WITH ENG.)	REF	EA
11	0181534	BRACKET, UPPER-EXHAUST	1	EA
12	5550014	2" EXHAUST CLAMP	3	EA
14	PNNA	BLT HEXHD M10 X 1.5 70MM CLS 8.8	2	EA
15	PNNA	WASHER LOCK M10	4	EA
16	PNNA	BLT HEXHD M10 X 1.5 25MM CLS 8.8	2	EA
18	PNNA	BLT HEXHD M8 X 1.25 25MM CLS 8.8	1	EA
19	7630779	FLEXIBLE COUPLING	1	EA
20	PNNA	WASHER LOCK M8	3	EA
21	5560136	CAPSCREW 1/2-13 SELF LOCKING DRILLED HEAD	2	EA
22	5560168	WSHR HARD FLAT .500 SP	2	EA
23	PNNA	WASHER FLAT .375	1	EA
24	PNNA	BLT HEXHD .375-16 1.25 GR5	14	EA
25	PNNA	WASHER LOCK .375 MDM	14	EA
26	PNNA	WASHER FLAT .313	2	EA

Courtesy of Crane.Market

Item	Part No.	Name	Qty	Uom
27	PNNA	NUT HEXHD .375-16 LKG	2	EA
28	PNNA	HEGO SENSOR (INCLUDED WITH ENGINE)	1	EA
29	0112084	3" SPACER	1	EA
30	0112085	4" SPACER	1	EA
31	5093006	CLAMP	2	EA
32	0111869	ALTERNATOR WIRE ASSY	1	EA
33	PNNA	BLT HEXHD 8MM-1.2P X 105MM CLS 8.8	1	EA
34	PNNA	BLT HEXHD 8MM-1.2P X 130 MM CLS 8.8	1	EA
36	0112086	ENGINE HARDNESS COVER PLATE	1	EA
37	0112087	42 PIN CONNECTOR BRACKET	1	EA
41	PNNA	NUT HEXHD #10-24 LKG	7	EA
43	3020095	SWITCH PRESSURE 6 PSI 1/8-27NPT	1	EA
44	7720201	REDUCER BUSHING1/4NPT 1/8NPT-	1	EA
45	PNNA	BLT HEXHD M10 X 1.5 X 20 CL 8.8	1	EA
46	3044145	TERMINAL RING	1	EA
47	0071563	WIRE 16 R81 R3131 7	1	EA
48	PNNA	SC TRSHD #10-24 .5 LG PLATED	5	EA
49	PNNA	SCR TRSHD #10-24 1.25 LG PLATE	2	EA
50	9980012	.040 INCH DIAMETER STAINLESS STEEL SAFETY LOCKWIRE -(SOLD IN ONE POUND CAN)	1	EA

Courtesy of Crane.Market

REPAIR PARTS

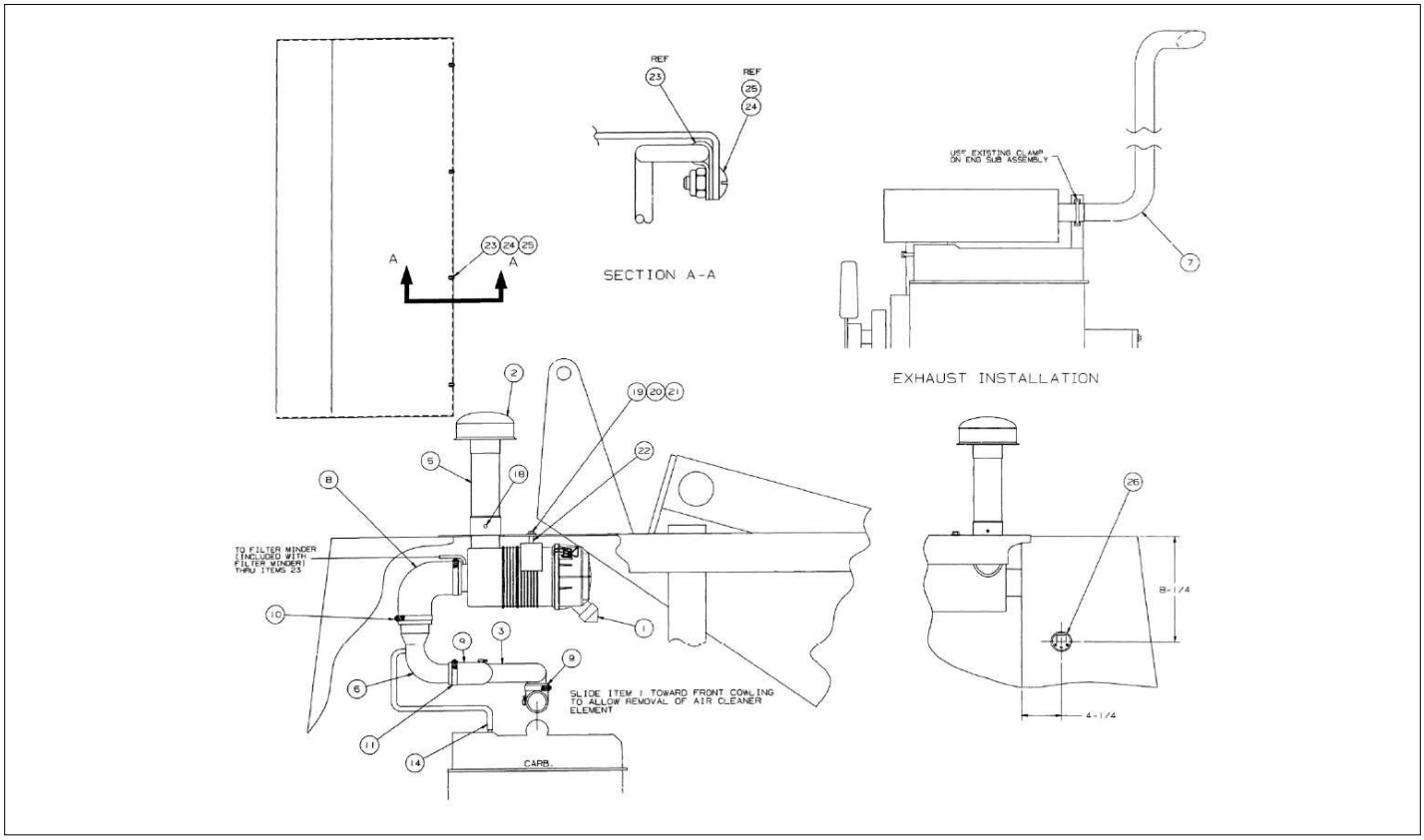

Courtesy of Crane.Market

Item	Part No.	Name	Qty	Uom
1	7630689	AIR CLEANER, FORD LRG-425	1	EA
Not Shown	8140006	REPLACEMENT PRIMARY FILTER ELEMENT	1	EA
2	7630004	AIR INLET HOOD	1	EA
3	0082694	TUBE ELBOW	1	EA
5	0080679	AIR INLET TUBE	1	EA
6	0082937	ELBOW AIR CLEANER	1	EA
7	0111959	TAIL PIPE	1	EA
8	7630016	ELBOW 3" 90 DEGREE RUBBER	1	EA
9	7630197	ELBOW, 2 INCH 90° RUBBER	2	EA
10	5550050	CLAMP	2	EA
11	5550040	CLAMP	4	EA
14	5010020	EMISSION CONTROL HOSE 5/8 INCH DIAMETER	1.5 IN	EA
18	PNNA	POP RIVET #AD36ABS	3	EA
19	PNNA	BLT 8MM 1.25PX50MM GR5	2	EA
20	PNNA	FLATWASHER 3/8"	8	EA
21	PNNA	NUT 3/8-16 ESNA	4	EA
22	0071510	SPACER, AIR CLEANER	2	EA
23	5090302	TUBE CLAMP	4	EA
24	PNNA	M SCRW #10-24 X .5" LG TRUS HD PLTD	4	EA
25	PNNA	NUT #10-24 ESNA	4	EA
26	7630140	FILTER CONDITION INDICATOR	1	EA

Courtesy of Crane.Market

REPAIR PARTS

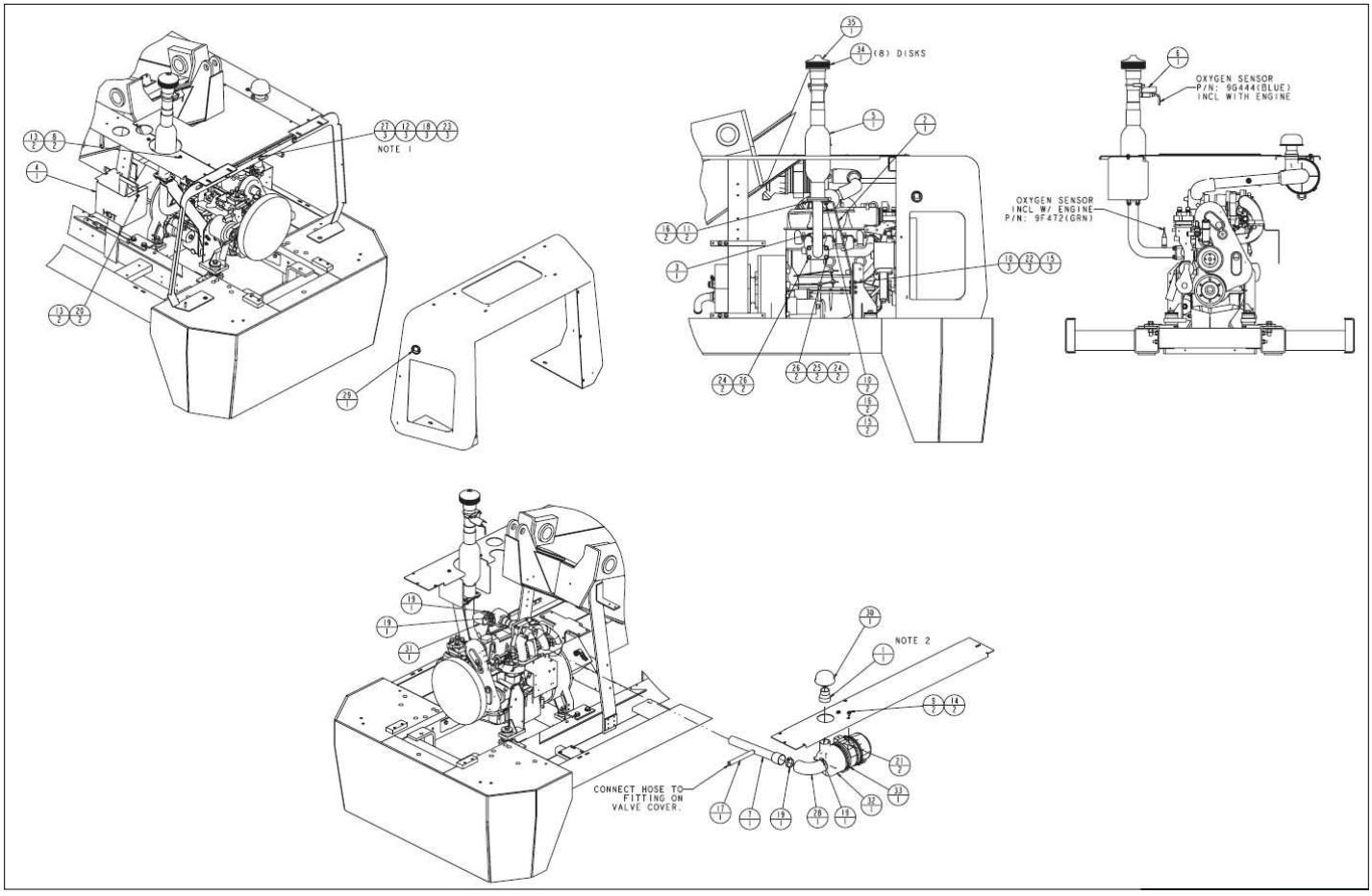

Courtesy of Crane.Market

Item	Part No.	Name	Qty	Uom
1	0071995	TUBE, AIR CLEANER INLET	1	EA
2	0083909	BRACE, CATALYTIC CONVERTER	1	EA
3	0083911	WELDMENT, EXHAUST FLG	1	EA
4	0083914	COVER, CATALYTIC CONVERTER (FO)	1	EA
5	0083919	WELDMENT, CATALYTIC CONVERTER (FO)	1	EA
6	0083946	COVER OXYGEN SENSOR (FO)	1	EA
7	0112577	WELDMENT, AIR INLET	1	EA
8	970029	CAPSCREW 1/4-20 X 3/4 INCH LONG HEX HEAD GRADE 5	2	EA
9	970239	BOLT HEXHD .313-18 .75 GR. 5	2	EA
10	970419	BOLT HEXHD .375-16 1.25 GR. 5	5	EA
11	970469	BOLT HEXHD .375-16 1.00 GR. 5	2	EA
12	986009	FLAT WASHER #10	3	EA
13	986019	WASHER FLAT .250	4	EA
14	986269	WASHER 5/16 MEDIUM FLAT	2	EA
15	986299	BOLT HEXHD .313-18 2.50 GR. 5	5	EA
16	987119	BOLT HEXHD .375-16 1.75 GR. 5	4	EA
17	5010020	EMISSION CONTROL HOSE 5/8 INCH DIAMETER	24"	EA
18	5093000	CLAMP	3	EA
19	5550040	CLAMP	4	EA
20	5560004	NUT HEXHD .250-20 LKG	2	EA
21	5560031	NUT HEX LKG .313-18	2	EA
22	5560033	NUT HEXHD .375-16 LKG	3	EA
23	5560034	NUT HEX LKG 10-24	3	EA
24	5560356	WASHER LOCK M10	4	EA

Courtesy of Crane.Market

Item	Part No.	Name	Qty	Uom
25	5560364	WASHER FLAT M10	2	EA
26	5560625	BOLT 10MM- 1.50P 20MM	4	EA
27	5560673	MACHINE SCREW #10-24NC X 1" LG	3	EA
28	7630015	90DEG ELBOW	1	EA
29	7630140	FILTER CONDITION INDICATOR	1	EA
30	7630196	AIR INLET HOOD	1	EA
31	7630197	ELBOW, 2 INCH 90° RUBBER	1	EA
32	7630755	AIR CLEANER	1	EA
33	7630759	BRACKET AIR CLEANER	1	EA
34	7630796	DIFFUSER DISCS (12 DISC PER)	.67	EA
35	7630797	MUFFLER ADAPTER	1	EA

Courtesy of Crane.Market

REPAIR PARTS

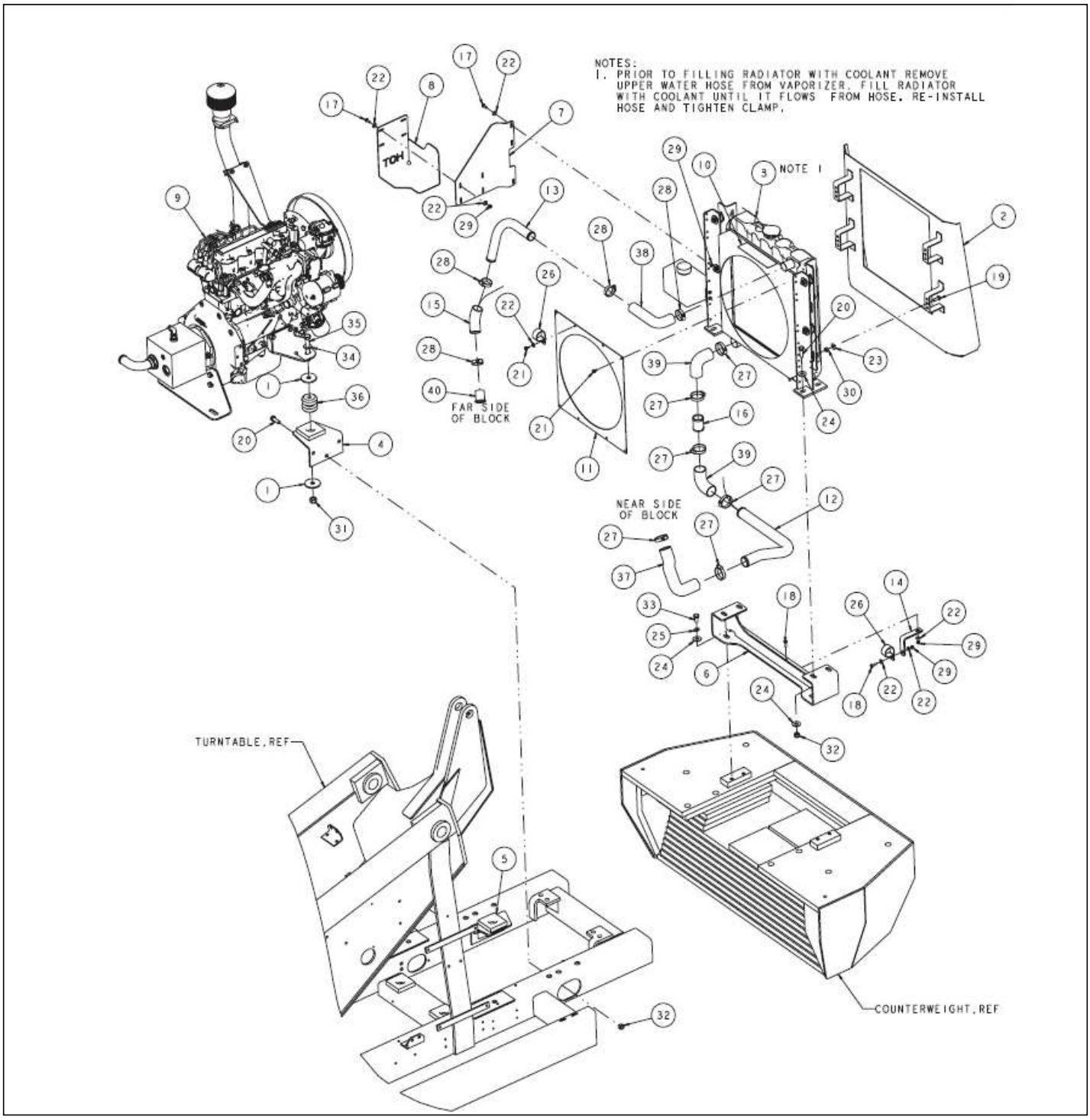

Courtesy of Crane.Market

Item	Part No.	Name	Qty	Uom
1	0071559	WASHER ENGINE MOUNTING DIESEL	8	EA
2	0083501	SHOURD WELDMENT CU	1	EA
3	0084046	RADIATOR ASSEMBLY	1	EA
4	0084047	WELDMENT MTR MNT -RH (GM)	1	EA
5	0084048	WELDMENT MTR MNT -LH (GM)	1	EA
6	0084058	WELDMENT RADIATOR SUPPORT -GM	1	EA
7	0084080	HEAT SHIELD, UPPER	1	EA
8	0084081	HEAT SHIELD, LOWER	1	EA
9	0084096	ENGINE SUB ASSY GM TIER III TB60	1	EA
10	0163367	DECAL, COOLANT FILLING	1	EA
11	0172395	SHROUD	1	EA
12	0192170	TUBE, LOWER RADIATOR 1.75 OD	1	EA
13	0192172	TUBE, UPPER RADIATOR 1.50 OD	1	EA
14	0192173	BRACKET, LOWER RAD TUBE	1	EA
15	0192182	ELBOW, MOD 45 DEGREE 1.50 OD	1	EA
16	0192192	TUBE UNION 1.75 OD X 2.375 LG	1	EA
17	970029	CAPSCREW 1/4-20 X 3/4 INCH LONG HEX HEAD GRADE 5	7	EA
18	970049	BOLT HEXHD .250-20 1.00 GR. 5	2	EA
19	970469	BOLT HEXHD .375-16 1.00 GR. 5	4	EA
20	970909	BOLT HEXHD .500-13 1.50 GR5	10	EA
21	978629	SCREW SLFTPG .25-20 .50	5	EA
22	986019	WASHER FLAT .250	15	EA
23	986299	BOLT HEXHD .313-18 2.50 GR. 5	4	EA

Courtesy of Crane.Market

Item	Part No.	Name	Qty	Uom
24	986359	WASHER 1/2 MEDIUM FLAT	12	EA
25	987139	WASHER LOCK .500	4	EA
26	5093012	CUSHION CLAMP #28 (1-3/4")	2	EA
27	5550030	CLAMP	6	EA
28	5550038	CLAMP WORM DRIVE #28	4	EA
29	5560004	NUT HEXHD .250-20 LKG	9	EA
30	5560033	NUT HEXHD .375-16 LKG	4	EA
31	5560036	NUT 5/8-11 SELF LOCKING	4	EA
32	5560039	NUT LKG .500-13	10	EA
33	5560138	BOLT HEXHD .500-13 1.00 GR5	4	EA
34	5560169	WSHR HARD FLAT .625 SP	4	EA
35	5560639	CAPSCREW 5/8-11 X 4-1/2 INCH LONG HEX HEAD GRADE 5	4	EA
36	7630117	ENGINE MOUNT	4	EA
37	7630820	ELBOW 1.75 90 DEGREE WITH OFFSET	1	EA
38	7630821	ELBOW 1.50 90 DEGREE	1	EA
39	7630833	ELBOW 1.75 90 DEGREE	2	EA
40	7630835	REDUCER, TUBE END 1.50/1.25	1	EA

Courtesy of Crane.Market

REPAIR PARTS

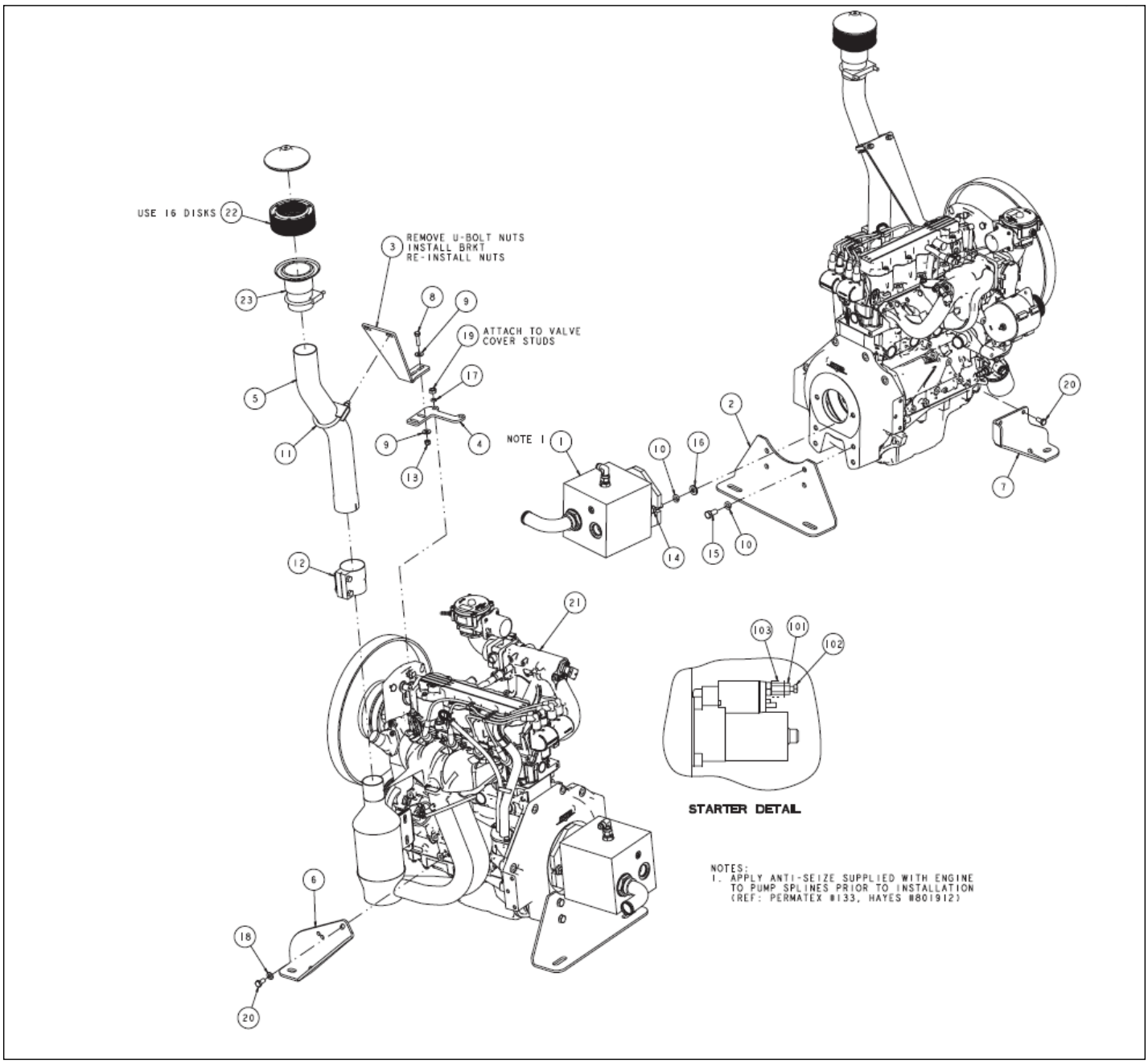

Courtesy of Crane.Market

Item	Part No.	Name	Qty	Uom
1	0082138	PUMP SUB ASSEMBLY TB-A42/50 ALL	1	EA
2	0084045	MOTOR MOUNT, REAR	1	EA
3	0084061	BRACE, TAILPIPE UPPER - GM	1	EA
4	0084062	BRACE, TAILPIPE LOWER - GM	1	EA
5	0084134	TAILPIPE - GM T3 TB60	1	EA
6	0172373	MOTOR MOUNT - FRONT LH	1	EA
7	0172374	MOTOR MOUNT - FRONT RH	1	EA
8	970269	BOLT .313-18 1.25 GR. 5	2	EA
9	986269	WASHER 5/16 MEDIUM FLAT	4	EA
10	987139	WASHER LOCK .500	6	EA
11	5550026	EXHAUST CLAMP	1	EA
12	5554373	CLAMP MUFFLER 2.50 STEPPED	1	EA
13	5560031	NUT HEX LKG .313-18	2	EA
14	5560136	CAPSCREW 1/2-13 SELF LOCKING DRILLED HEAD	2	EA
15	5560138	BOLT HEXHD .500-13 1.00 GR5	4	EA
16	5560168	WSHR HARD FLAT .500 SP	2	EA
17	5560356	WASHER LOCK M10	2	EA
18	5560364	WASHER FLAT M10	1	EA
19	5560400	NUT HEX M10 X 1.50	2	EA
20	5560625	BOLT 10MM- 1.50P 20MM	4	EA
21	7624764	ENGINE, GM 2.4 T3	1	EA
22	7630796	DIFFUSER DISCS (12 DISC PER)	1.33	EA
23	7630797	MUFFLER ADAPTER	1	EA
101	0075254	POWER STUD EXTENSION	1	EA
102	5560357	BOLT, M8 1.25 25MM	1	EA
103	0075415	INSULATOR TUBE	1	EA
Not Shown	8113651	SPARK PLUG – ITEM NOT SHOWN	4	EA

Courtesy of Crane.Market

Item	Part No.	Name	Qty	Uom
Not Shown	8113642	OIL FILTER – ITEM NOT SHOWN	1	EA
Not Shown	8113643	FUEL FILTER – ITEM NOT SHOWN	1	EA
Not Shown	8113657	FAN BELT – ITEM NOT SHOWN	1	EA
Not Shown	8113653	STARTER – ITEM NOT SHOWN	1	EA
Not Shown	8113650	ALTERNATOR – ITEM NOT SHOWN	1	EA
Not Shown	8113645	OIL SWITCH – ITEM NOT SHOWN	1	EA
Not Shown	8113646	COOLANT TEMP SENSOR – ITEM NOT SHOWN	1	EA
Not Shown	8113655	THERMOSTAT – ITEM NOT SHOWN	1	EA
Not Shown	8113647	LP SHUT-OFF SOLENOID/FILTER 1.6/2.4 GM – ITEM NOT SHOWN	1	EA
Not Shown	8113648	OXYGEN SENSOR – ITEM NOT SHOWN	1	EA
Not Shown	8113661	ENGINE HARNESS – ITEM NOT SHOWN	1	EA
Not Shown	8113462	ENGINE HARNESS RELAY 1.6 / 2.4 GM KEM – ITEM NOT SHOWN	1	EA
Not Shown	8113647	LP SHUT-OFF SOLENOID/FILTER 1.6/2.4 GM – ITEM NOT SHOWN	1	EA
Not Shown	8113649	FUEL PUMP 1.6/2.4 GM KEM – ITEM NOT SHOWN	1	EA
Not Shown	7630874	GM ECU KEM 2.4L T3 DUAL FUEL – ITEM NOT SHOWN	1	EA

Courtesy of Crane.Market

REPAIR PARTS

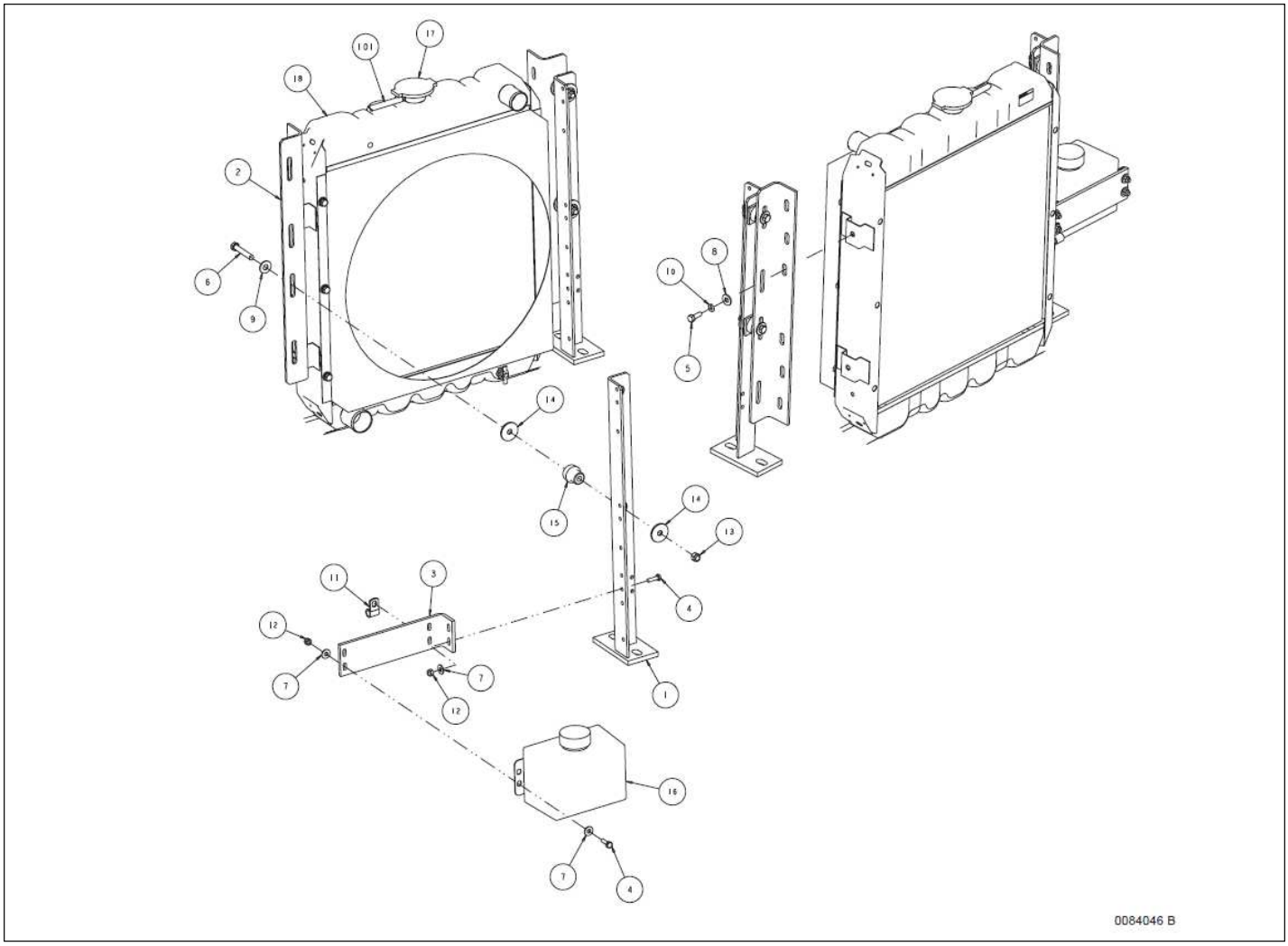

Courtesy of Crane.Market

Item	Part No.	Name	Qty	Uom
1	0074630	WLDMT RAD BRKT	2	EA
2	0083153	ANGLE RADIATOR MOUNT	2	EA
3	0084055	BRACKET, OVERFLOW BOTTLE	1	EA
4	970039	BOLT .25-20 .875 GR5	6	EA
5	970249	BOLT .313-18 .875	4	EA
6	970519	BOLT HEXHD .375-16 2.25 GR. 5	4	EA
7	986019	WASHER FLAT .250	10	EA
8	986269	WASHER 5/16 MEDIUM FLAT	4	EA
9	986299	BOLT HEXHD .313-18 2.50 GR. 5	4	EA
10	987109	WASHER LOCK .313	4	EA
11	5093001	CUSHION CLAMP #8 (1/2)	1	EA
12	5560004	NUT HEXHD .250-20 LKG	6	EA
13	5560033	NUT HEXHD .375-16 LKG	4	EA
14	5560179	WASHER SPCL FLAT	8	EA
15	7630180	RADIATOR CUSHION	4	EA
16	7630227	BOTTLE 2QT OVERFLOW	1	EA
17	7630239	RADIATOR CAP 13 PSI	1	EA
18	7630756	ASSEMBLY RADIATOR	1	EA
101	5010011	HOSE SAE30R2-05 .312 FUEL	4 FT	EA

Courtesy of Crane.Market

REPAIR PARTS

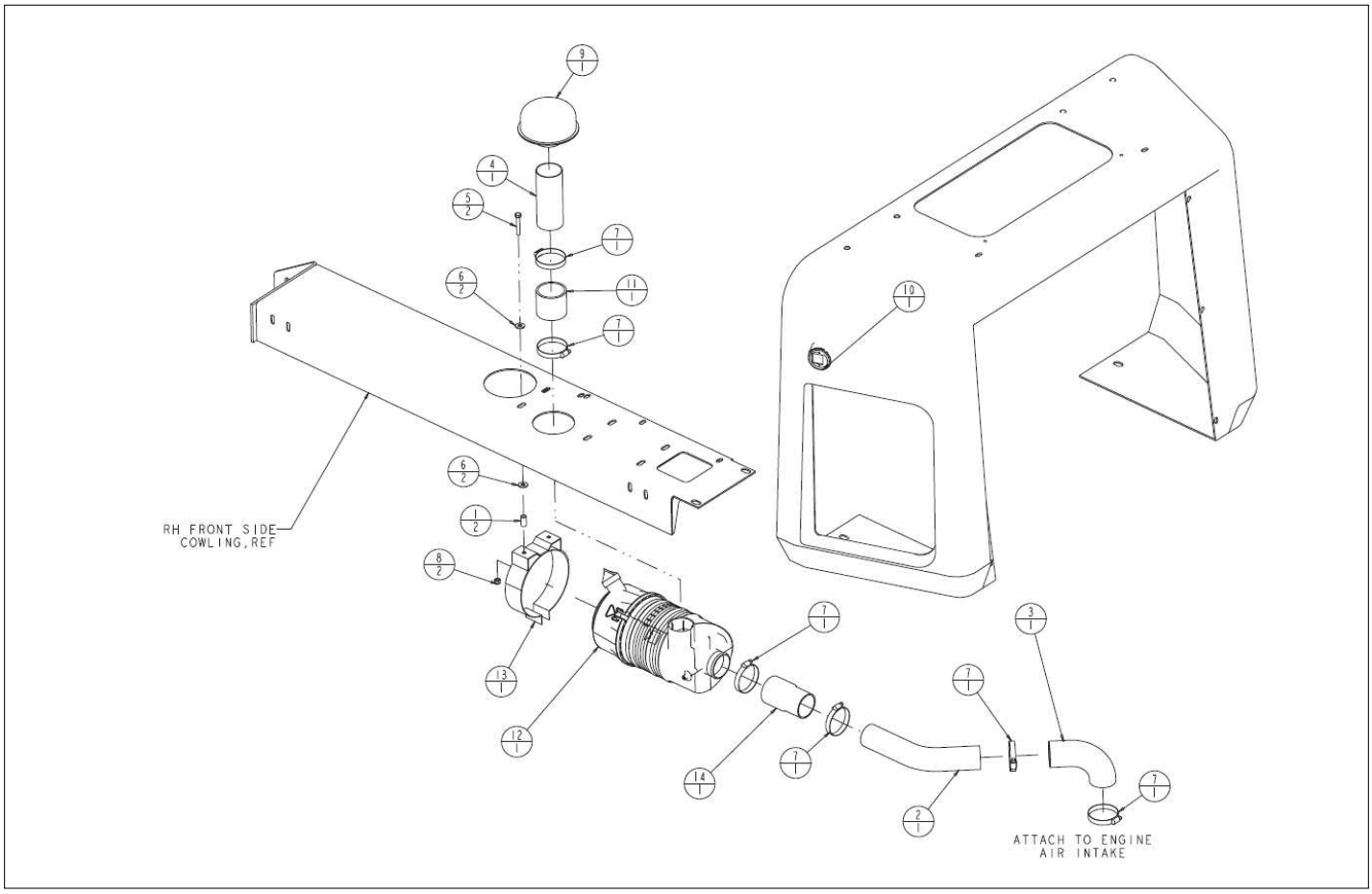

Courtesy of Crane.Market

Item	Part No.	Name	Qty	Uom
1	0071510	SPACER, AIR CLEANER	2	EA
2	0084063	TUBE 45 DEG 2.25 OD	1	EA
3	0084064	ELBOW, MOD 90 DEGREE 2.25 ID	1	EA
4	0182043	TUBE, AIR INLET AB60J FO	1	EA
5	970299	CAPSCREW 5/16-18 X 2 LG HH	2	EA
6	986269	WASHER 5/16 MEDIUM FLAT	4	EA
7	5550050	CLAMP	6	EA
8	5560031	NUT HEX LKG .313-18	2	EA
9	7630024	HOOD, AIR INLET FOR AIR CLEANER	1	EA
10	7630140	FILTER CONDITION INDICATOR	1	EA
11	7630158	2.25" AIR INTAKE HOSE	1	EA
12	7630755	AIR CLEANER	1	EA
13	7630759	BRACKET AIR CLEANER	1	EA
14	7630838	REDUCER STRAIGHT 2.50/2.25 ID	1	EA

Courtesy of Crane.Market

REPAIR PARTS

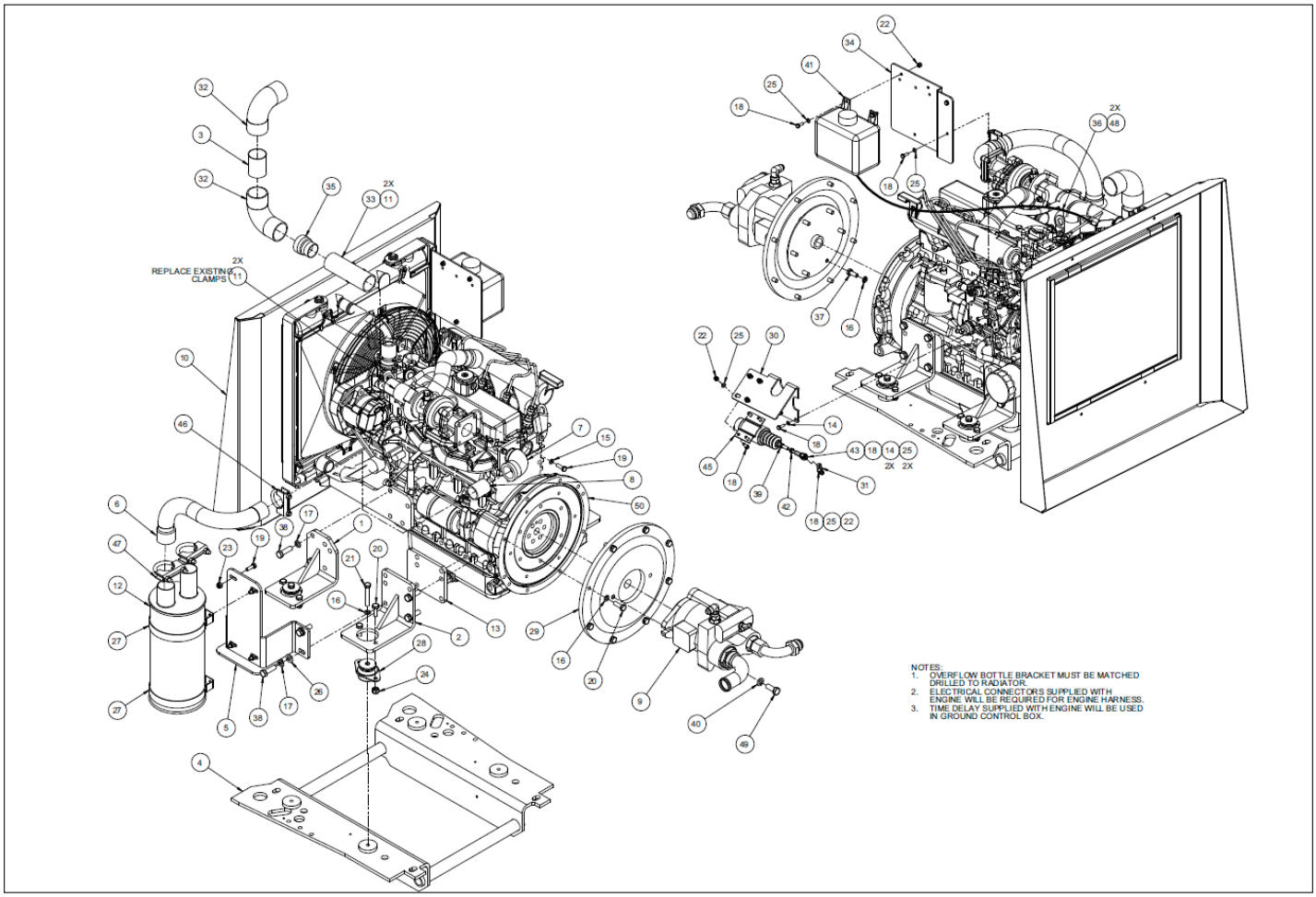

Courtesy of Crane.Market

Item	Part No.	Name	Qty	Uom
1	0075737	WELDMENT, ENGINE BRACKET FRONT	2	EA
2	0075738	WELDMENT ENGINE MOUNT REAR	2	EA
3	0075743	AIR INLET PIPE, 2"OD X 2.5"LG	1	EA
4	0075745	WLDMT, KU ENGINE MOUNT	1	EA
5	0075748	WLDMT, MUFFLER MOUNT	1	EA
6	0075751	PIPE, KU EXHAUST	1	EA
7	0075753	WLDMT, EXHAUST FLANGE	1	EA
8	0075756	WLDMT, EXHAUST FLANGE	1	EA
9	0082138	PUMP SUB ASSEMBLY TB-A42/50 ALL	1	EA
10	0084717	SHROUD, KU	1	EA
11	020451-013	CLAMP HOSE	4	EA
12	0260856	WELDMENT WALKER MUFFLER	1	EA
13	0421796	REAR MOTOR MOUNT ENGINE PAD	2	EA
14	056021-006	WASHER LOCK M6 DIN 127	5	EA
15	056021-008	WASHER LOCK M8	4	EA
16	056021-010	WASHER LOCK M10 DIN127	18	EA
17	056021-012	WASHER LOCK M12 DIN 127	15	EA
18	056058-018	HHCS M6 X 1 X 18 G8.8 ISO 4017_DIN 931	14	EA
19	056059-025	HHCS M8 X 1.25 X 25 G8.8 ISO 4014_DIN 931	8	EA
20	056060-030	BLT HEXBOLT M10 X 30M DIN 931 GR 8.8 ZP	16	EA
21	056060-065	HHCS M10 X 1.5 x 65 G8.8 DIN 931	4	EA
22	056066-006	NUT, HEX M6 X 1.0 GR 8.8 SELF LOCKING DIN 985	10	EA
23	056066-008	NUT HEX M8 X 1.25 GR8.8 SELF LOCKING DIN 985	4	EA

Courtesy of Crane.Market

Item	Part No.	Name	Qty	Uom
24	056066-010	NUT HEX M10 X 1.50 GR8.8 SELF LOCKING DIN 985	8	EA
25	056069-006	M6 FLAT WASHER DIN 125	12	EA
26	056069-012	M12 FLAT WASHER DIN 125	4	EA
27	100180-041	CLAMP MUFFLER	2	EA
28	100209-000	ISOLATOR ENGINE	4	EA
29	104703-000	HOUSING ADAOTER KIT AB62 POLARIS HAYES	1	EA
30	104737-000	THROTTLE, SOLENOID BRKT	1	EA
31	104744-000	THROTTLE LINKAGE WELDMENT	1	EA
32	104754-000	90 DEGREE ELBOW 2"ID	2	EA
33	104803-000	HOSE, LONG AIR INTAKE, 1-3/4"ID X 2-1/8"	1	EA
34	104883-000	OVERFLOW BOTTLE BRACKET	1	EA
35	106960-001	REDUCER, METAL INTAKE HOSE-1.625"OD X 2"OD	1	EA
36	5010011	HOSE SAE30R2-05 .312 FUEL	2	EA
37	510587-025	HHCS M10 X 1.25 25 G8.8 DIN 961	6	EA
38	513133-040	HHCS M12 X 1.75 X 40 G10.9 DIN 931	15	EA
39	984339	.250-28UNF JAM HEX NUT	1	EA
40	987139	WASHER LOCK .500	2	EA
41	1430527	OVERFLOW FLUID RESERVOIR	1	EA
42	2650001	INLINE SWIVEL SYNCHRO START #SA-2727	1	EA
43	2690004	FEMAIL ROD END	1	EA
44	3028812	TEMPERATURE SWITCH NC	1	EA
45	3040174	SOLENOID, THROTTLE	1	EA
46	5550005	CLIP EXHAUST 1.75	1	EA
47	5550007	CLIP MUFFLER 1.88 .375-16 HVY	2	EA

Courtesy of Crane.Market

Item	Part No.	Name	Qty	Uom
48	5550028	CLAMP	2	EA
49	5563017	BLT HEX HD .500-13 X 1.25 GR5	2	EA
50	7624794	ENGINE, KU WITH RADIATOR	1	EA
Not Shown	7630948	OIL DRAIN PLUG GASKET	1	EA
Not Shown	104673-105	FAN BELT	1	EA
Not Shown	0260466	THERMOSTAT HSG. GASKET	1	EA
Not Shown	067614-023	OIL PRESSURE SWITCH (512483-000)	1	EA
Not Shown	104673-113	OIL FILTER	1	EA
Not Shown	5089682	FUEL FILTER FOR V2403T	1	EA
Not Shown	104701-000	RADIATOR KIT	1	EA

Courtesy of Crane.Market

REPAIR PARTS

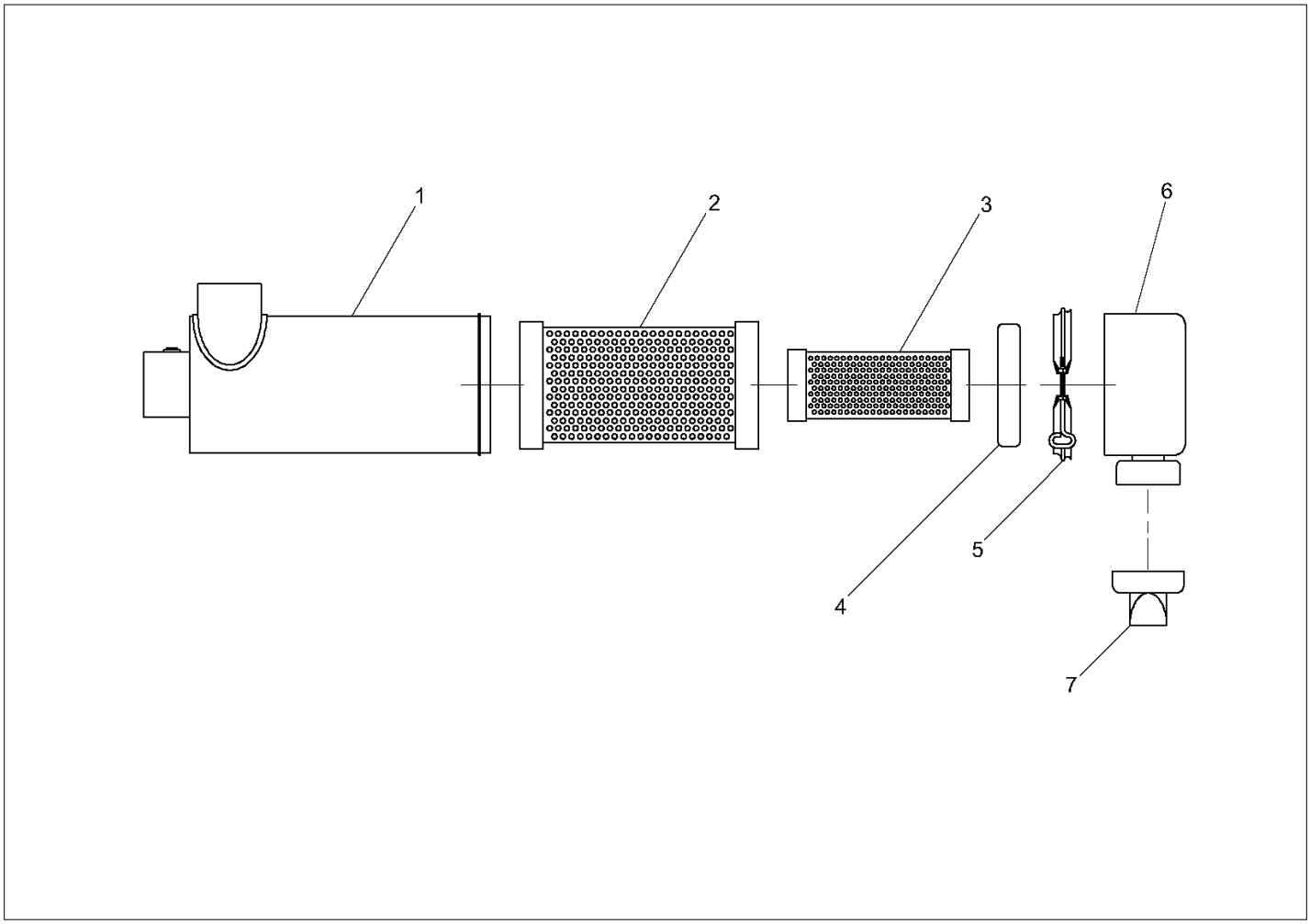

Courtesy of Crane.Market

Item	Part No.	Name	Qty	Uom
Not Shown	7630003	AIR CLEANER	1	EA
1	PNNA	HOUSING – NOT SOLD SEPARATELY	1	EA
2	8040106	PRIMARY FILTER ELEMENT	1	EA
3	8040107	SECONDARY FILTER ELEMENT	1	EA
4	8040112	CLEANER CAP BAFFLE	1	EA
5	8040114	CLAMP	1	EA
6	8040111	DUST CAP	1	EA
7	8040115	VACUATOR VALVE	1	EA

Courtesy of Crane.Market

REPAIR PARTS

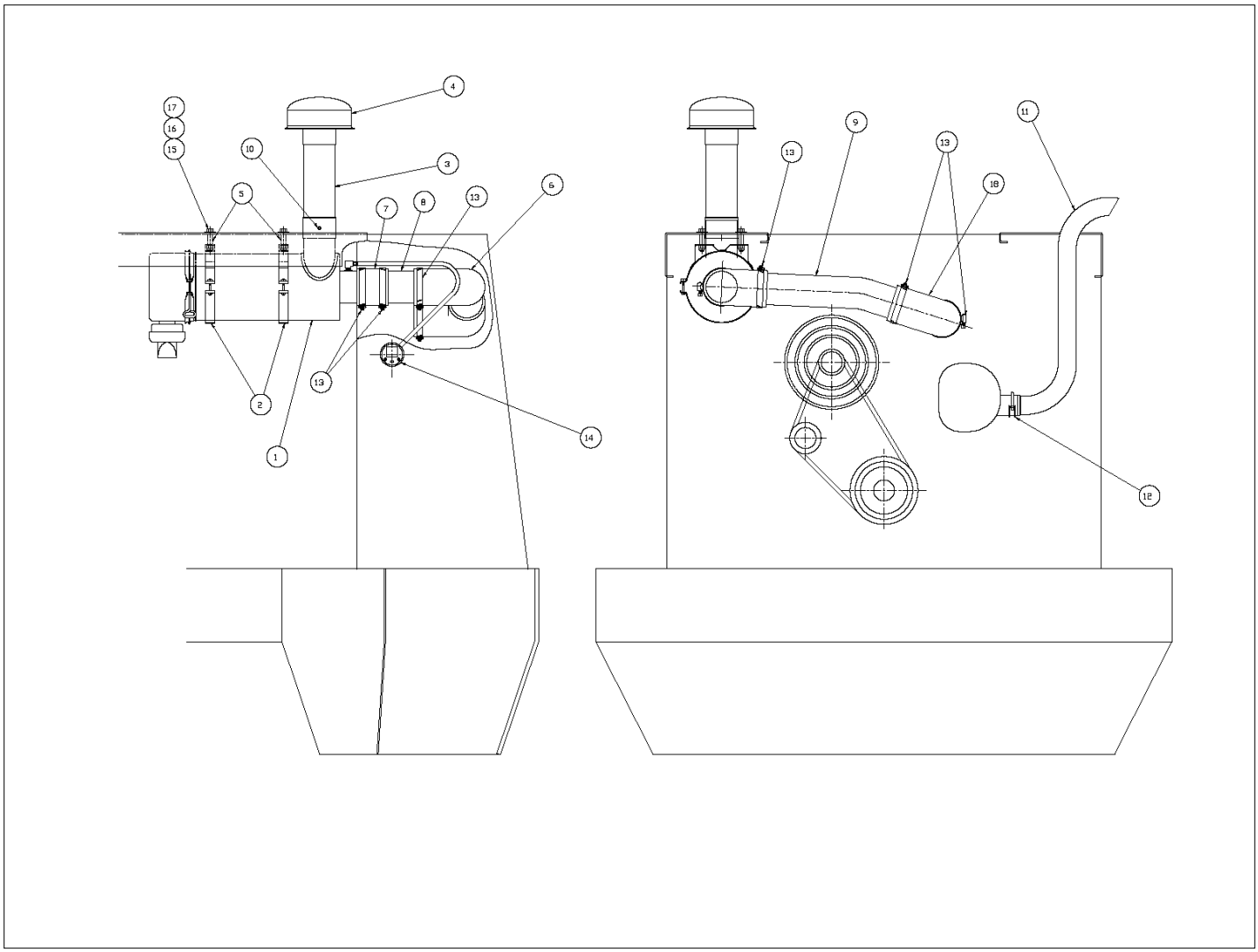

Courtesy of Crane.Market

Item	Part No.	Name	Qty	Uom
1	7630003	AIR CLEANER	1	EA
2	7630005	MOUNTING BAND	2	EA
3	0080679	AIR INLET TUBE	1	EA
4	7630004	AIR INLET HOOD	1	EA
5	0071510	SPACER, AIR CLEANER	4	EA
6	7630016	ELBOW 3" 90 DEGREE RUBBER	1	EA
7	0081053	AIR INTAKE HOSE	1	EA
8	0081052	TUBE, AIR INTAKE	1	EA
9	0081639	TUBE AIR INTAKE	1	EA
10	PNNA	POP RIVET #AD44-ABS	1	EA
11	0081640	EXHAUST PIPE	1	EA
12	5550007	CLIP MUFFLER 1.88 .375-16 HVY	1	EA
13	5550050	CLAMP	6	EA
14	7630140	FILTER CONDITION INDICATOR	1	EA
15	PNNA	CAPSCREW, 3/8-16 X 1-2/4 LG HEX HD GR5	4	EA
16	PNNA	WASHER, 3/8 FLAT	4	EA
17	5560033	NUT HEXHD .375-16 LKG	4	EA
18	7630129	ELBOW 90° RUBBER	1	EA

Courtesy of Crane.Market

REPAIR PARTS

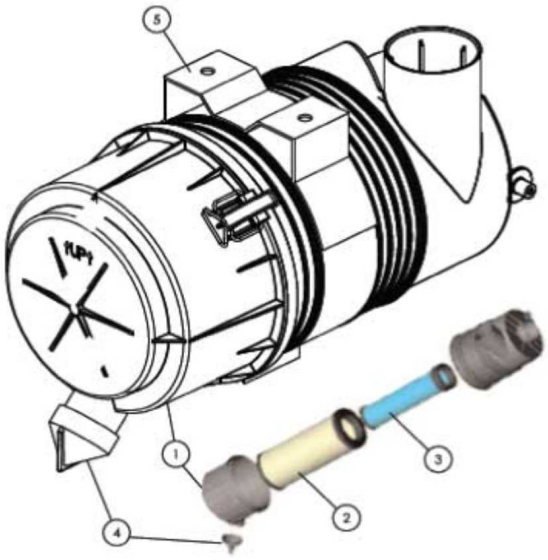

ENGINAIRE
SHOWN

Courtesy of Crane.Market

Item	Part No.	Name	Qty	Uom
Not Shown	7630755	AIR CLEANER	1	EA
Not Shown	8140014	CLIP AIR CLEANER - NELSON ONLY	3	EA
1	8140013	COVER REPLACEMENT - NELSON ONLY	1	EA
2	8050097	PRIMARY ELEMENT - ENGINAIRE ONLY	1	EA
Not Shown	8140011	PRIMARY ELEMENT - NELSON ONLY	1	EA
3	8050098	SAFETY ELEMENT - ENGINAIRE ONLY	1	EA
4	8050099	EXTERNAL EJECTOR - ENGINAIRE	1	EA
Not Shown	068903-009	DUST EJECTOR - NELSON	1	EA
5	8050100	METAL BRACKET - ENGINAIRE ONLY	1	EA

Courtesy of Crane.Market

REPAIR PARTS

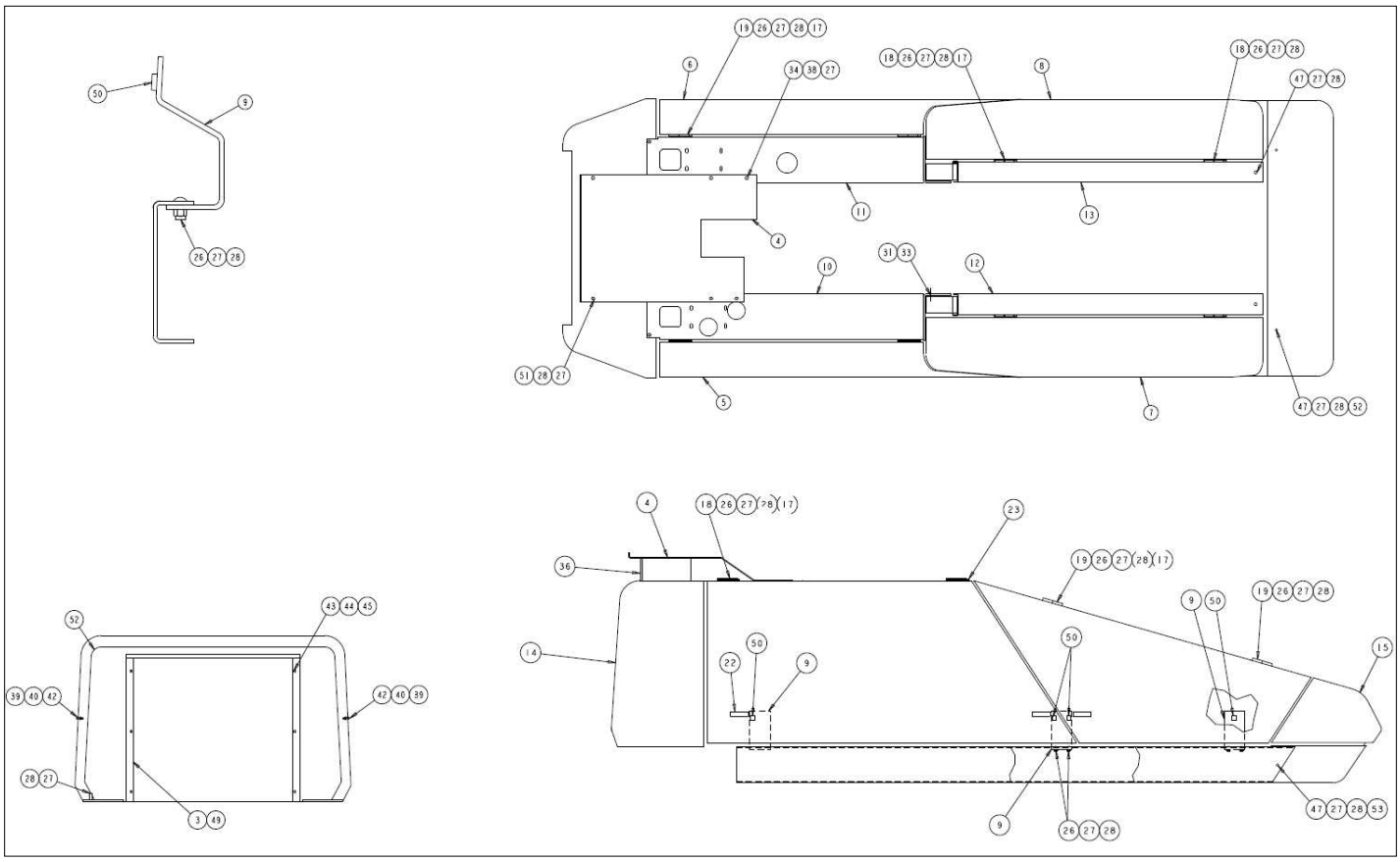

Courtesy of Crane.Market

Item	Part No.	Name	Qty	Uom
1	0073481	COVER ASSEMBLY	1	EA
3	0081670	INNER AIR INTAKE SHROUD	1	EA
4	0081117	COVER ASSY	1	EA
5	0082288	WELDMENT DOOR COWLING LF	1	EA
6	0082290	WELDMENT DOOR COWLING RF	1	EA
7	0082293	WELDMENT DOOR COWLING LR	1	EA
8	0082294	WELDMENT DOOR COWLING RR	1	EA
9	0082303	DOOR STOP MIDDLE	6	EA
10	0082304	WELDMENT COWLING SIDE LF	1	EA
11	0082307	WELDMENT, RH SIDE COWLING (CU)	1	EA
12	0082310	RAIL SIDE LR	1	EA
13	0082311	RAIL SIDE RR	1	EA
14	0083274	COWLING FRONT	1	EA
Not Shown	A08082A	FRNT COWLING INSTL TB60 / TB66J	1	EA
15	0082320	COVER TURNTABLE REAR	1	EA
16	0112239	WELDMENT BOX MOUNT	1	EA
17	0082321	GAS SPRING 17.1,10.8,105	6	EA
18	0082346	WELDMENT HINGE HALF LF	4	EA
19	0082349	WELDMENT HINGE HALF RF	4	EA
21	0110483	REAR COVER WELDMENT GROUND CONTROL	1	EA
22	5510022	ADJUSTABLE LEEVER LATCH	6	EA
23	5561559	PUSH RETAINER, 3/8 ID 7/8 OD	8	EA
24	5560311	BALLSTUD GAS SPRING	12	EA
26	302631	BLT CRG .375-16 1.50 GR5-CARRI	28	EA

Courtesy of Crane.Market

Item	Part No.	Name	Qty	Uom
27	986299	BOLT HEXHD .313-18 2.50 GR. 5	47	EA
28	5560033	NUT HEXHD .375-16 LKG	41	EA
29	970949	CAPSCREW 1/2-13 X 2-1/2 INCH LONG HEX HEAD GRADE 5	4	EA
30	986359	WASHER 1/2 MEDIUM FLAT	4	EA
31	987139	WASHER LOCK .500	12	EA
32	984149	NUT 1/2-13 HEX	8	EA
33	970849	BOLT, HEXHD .500-13 1.25 GR5	8	EA
34	970469	BOLT HEXHD .375-16 1.00 GR. 5	4	EA
36	0073158	SPACER SANDBLAST KIT	2	EA
37	5560034	NUT HEX LKG 10-24	5	EA
38	970029	CAPSCREW 1/4-20 X 3/4 INCH LONG HEX HEAD GRADE 5	5	EA
39	5560004	NUT HEXHD .250-20 LKG	7	EA
40	986069	WASHER FLAT .313	9	EA
41	5560649	M.SCREW, #10-24 X 1" LG. TRUSS HEAD	5	EA
42	5560089	SHIM .031	4	EA
43	970259	BOLT HEXHD .313-18 1.00	6	EA
44	9862969	WSHR FLAT .313	18	EA
45	5569833	SPEED NUT 5/16-18 UNC W/CAPTIVE NUT	6	EA
46	5560031	NUT HEX LKG .313-18	12	EA
47	970489	CAPSCREW 3/8-16 X 1-1/2 INCH LONG HEX HEAD GRADE 5	6	EA
48	5560083	TRIM LOC .125 RUBBER EDGE	16 FT	EA
49	0081671	OUTER AIR INTAKE SHROUD	1	EA
50	5560080	BUMPER ADHESIVE BACK-3M BUMPS	10	EA
51	5560645	CAPSCREW, 3/8-16 X 5.5" LG. HH GR. 5	2	EA

Courtesy of Crane.Market

Item	Part No.	Name	Qty	Uom
52	0082546	SHIM	20	EA
53	0082547	SHIM	12	EA
54	0162758	FRONT COWLING FRAME	1	EA

Courtesy of Crane.Market

REPAIR PARTS

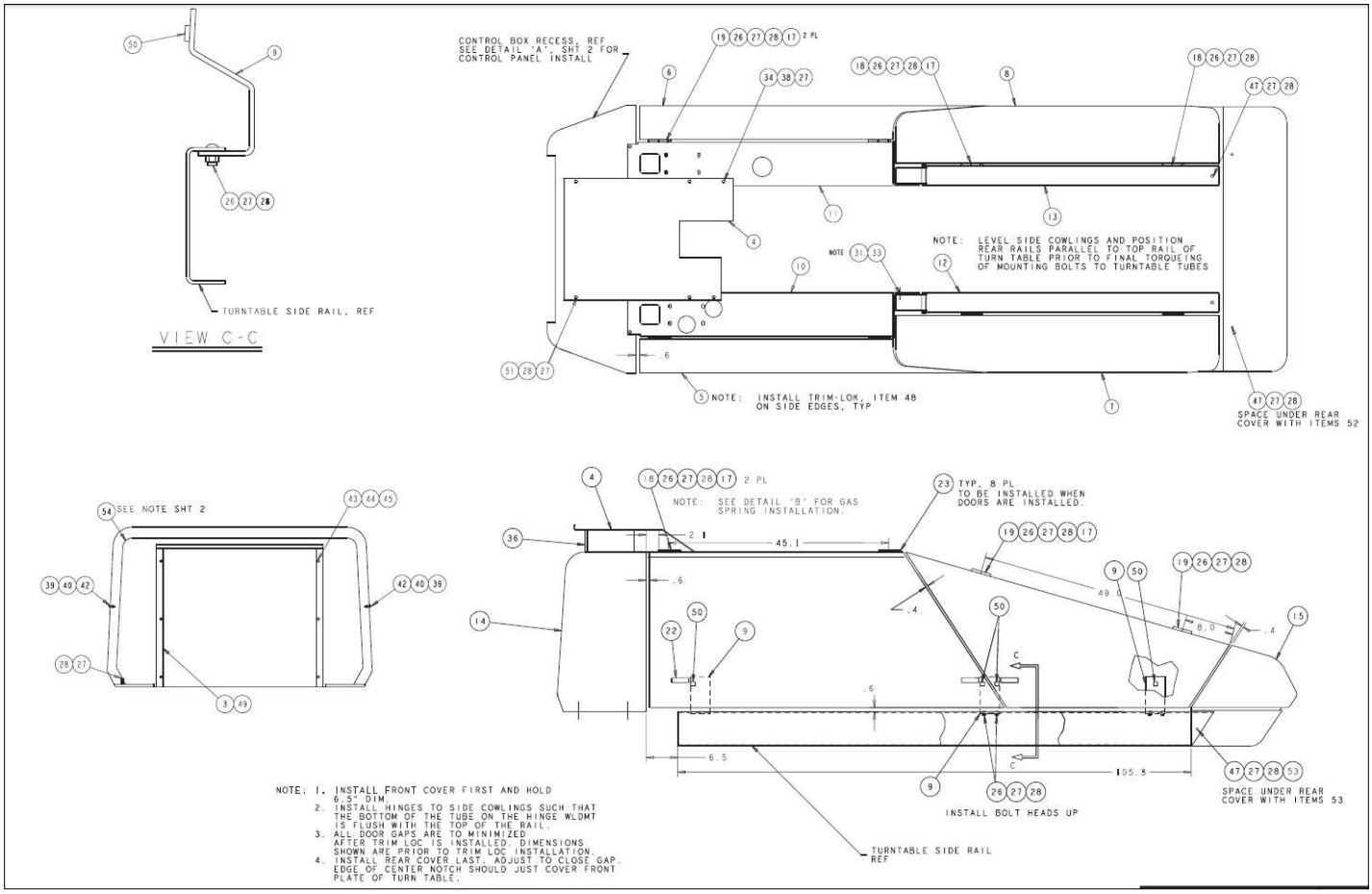

Courtesy of Crane.Market

Item	Part No.	Name	Qty	Uom
1	0073481	COVER ASSEMBLY	1	EA
3	0081670	INNER AIR INTAKE SHROUD	1	EA
4	0081117	COVER ASSY	1	EA
5	0082288	WELDMENT DOOR COWLING LF	1	EA
6	0082290	WELDMENT DOOR COWLING RF	1	EA
7	0082293	WELDMENT DOOR COWLING LR	1	EA
8	0082294	WELDMENT DOOR COWLING RR	1	EA
9	0082303	DOOR STOP MIDDLE	6	EA
10	0082304	WELDMENT COWLING SIDE LF	1	EA
11	0082307	WELDMENT, RH SIDE COWLING (CU)	1	EA
12	0082310	RAIL SIDE LR	1	EA
13	0082311	RAIL SIDE RR	1	EA
14	0083274	COWLING FRONT	1	EA
15	0082320	COVER TURNTABLE REAR	1	EA
16	0112239	WELDMENT BOX MOUNT	1	EA
17	0082321	GAS SPRING 17.1,10.8,105	6	EA
18	0082346	WELDMENT HINGE HALF LF	4	EA
19	0082349	WELDMENT HINGE HALF RF	4	EA
21	0110483	REAR COVER WELDMENT GROUND CONTROL		EA
22	5510022	ADJUSTABLE LEEVER LATCH	6	EA
23	5561559	PUSH RETAINER, 3/8 ID 7/8 OD	8	EA
24	PNNA	BALL STUD	12	EA
26	PNNA	3/8-16 SHT SHLDR CARR BOLT X 1.5 LG	28	EA
27	PNNA	WASHER 3/8 FLAT	47	EA
28	5560033	NUT HEXHD .375-16 LKG	41	EA

Courtesy of Crane.Market

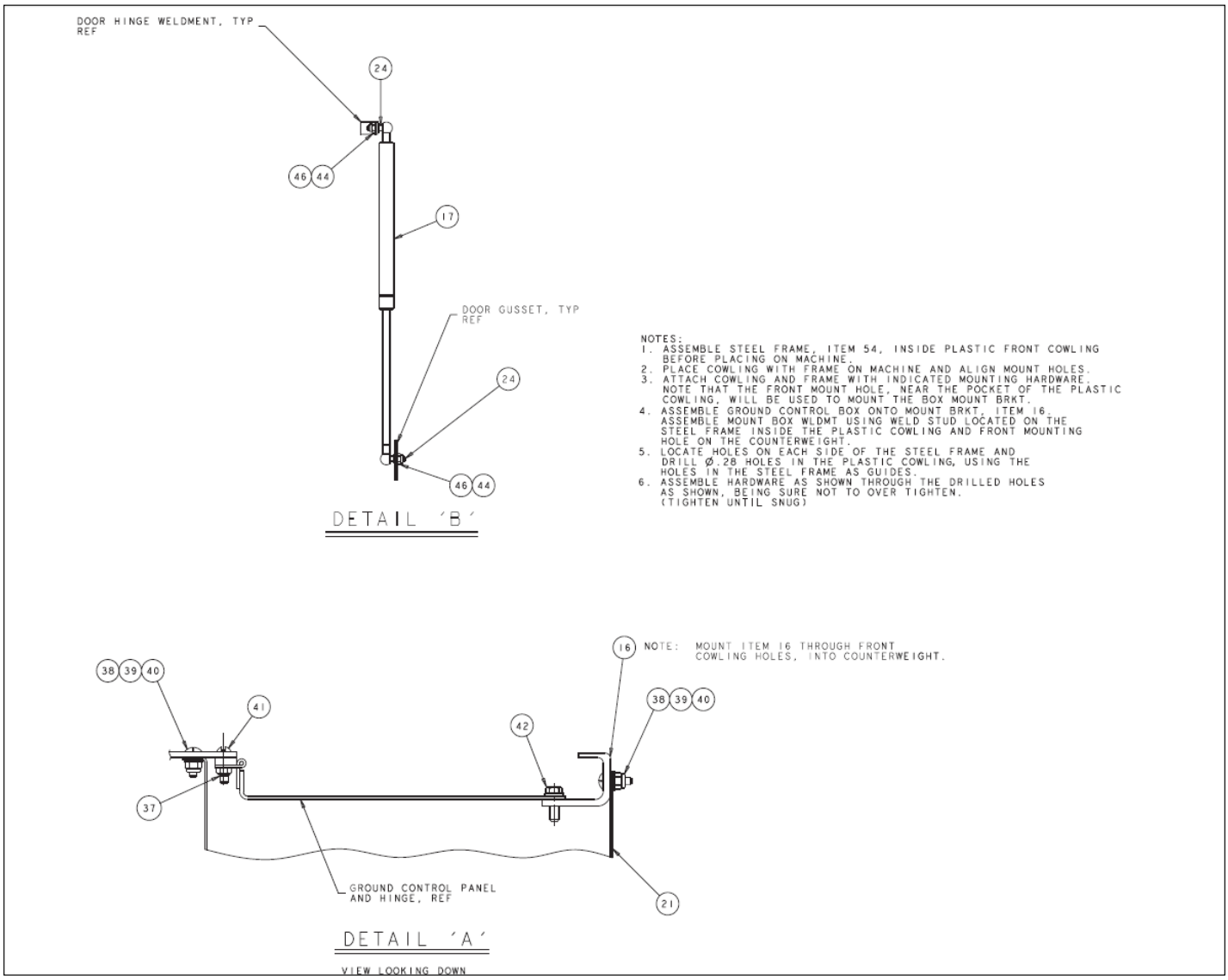

Courtesy of Crane.Market

Item	Part No.	Name	Qty	Uom
29	PNNA	1/2-13 UNC X 2-1/2 LG HHCS GR5	4	EA
30	PNNA	WASHER 1/2 FLAT	4	EA
31	PNNA	WASHER 1/2 MED. LCOK	12	EA
32	PNNA	NUT 1/2-13 UNC	8	EA
33	PNNA	BOLT HEXHD 1/2-13 UNC X 1.25 LG GR5		EA
34	PNNA	BOLT HEXHD 3/8-16 UNC X 1.00 LG GR5		EA
36	0073158	SPACER SANDBLAST KIT	2	EA
37	5560034	NUT HEX LKG 10-24	5	EA
38	PNNA	BOLT 1/4-20 UNC X .75 LG TRUSS HD	5	EA
39	PNNA	1/2-20 ESNA		EA
40	PNNA	WASHER 1/4 FLAT		EA
41	PNNA	M SCREW #10-24 XLG TRUSS HD		EA
42	5560086	SCR HEXHD .25-20 1.00 W/SEMS	4	EA
43	PNNA	BOLT HEXHD 5/16-18 UNC X 1.00 LG GR5		EA
44	PNNA	WASHER 5/16 MED FLAT	18	EA
45	5569833	SPEED NUT 5/16-18 UNC W/CAPTIVE NUT	6	EA
46	PNNA	5/16-18 UNC NUT ESNA	12	EA
47	PNNA	3/8-16 UNC X 1 1/2 LG HHCS GR5	6	EA
48	5560083	TRIM LOC .125 RUBBER EDGE	26 FT	EA
49	0081671	OUTER AIR INTAKE SHROUD	1	EA
50	5560080	BUMPER ADHESIVE BACK-3M BUMPS	10	EA
51	PNNA	3/8-16 UNC X 5 1/2 LG HHCS GR5	2	EA
52	0082546	SHIM	6	EA

Courtesy of Crane.Market

Item	Part No.	Name	Qty	Uom
53	0082547	SHIM	12	EA
54	0162758	FRONT COWLING FRAME	1	EA

Courtesy of Crane.Market

REPAIR PARTS

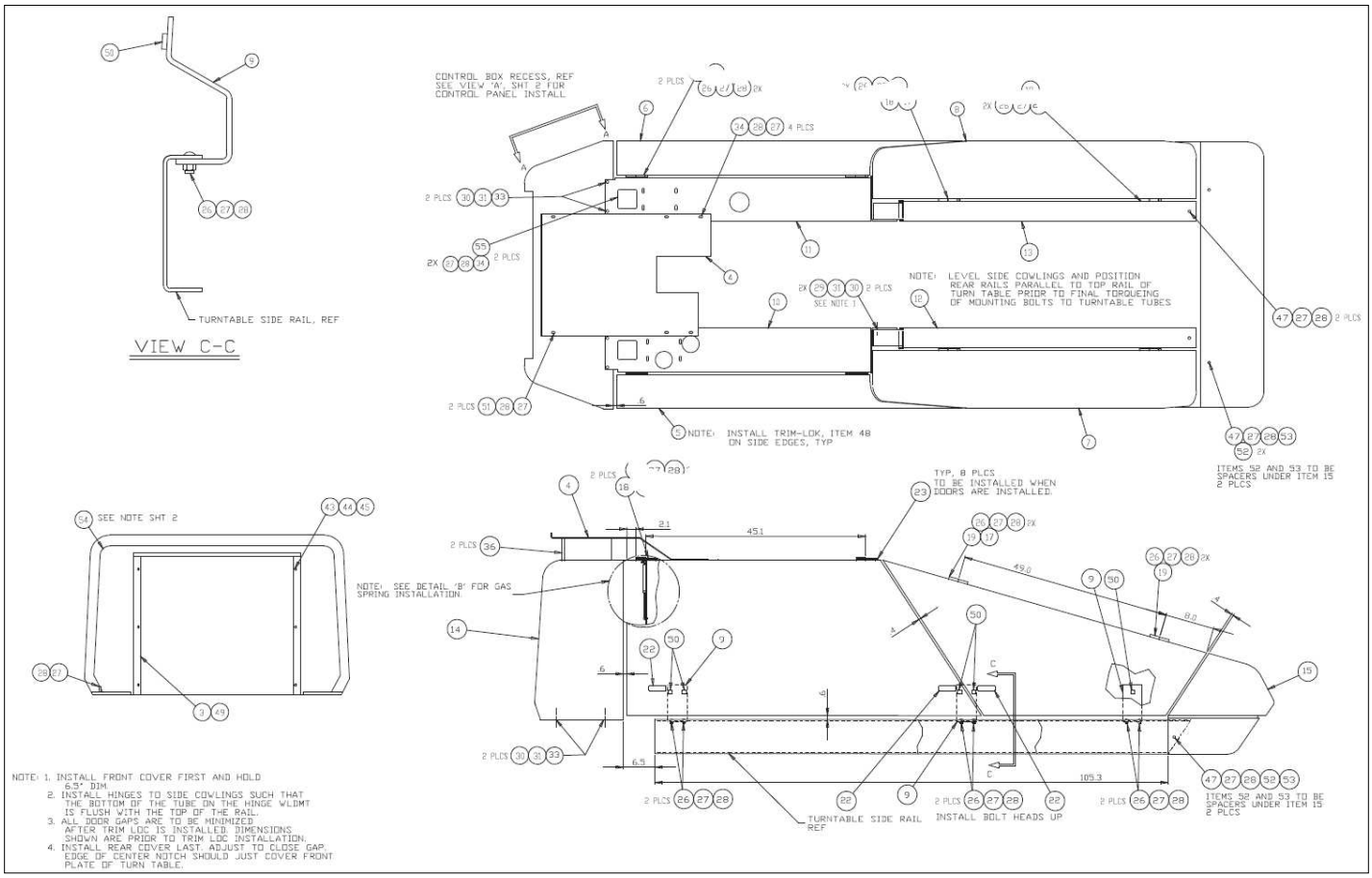

Courtesy of Crane.Market

Item	Part No.	Name	Qty	Uom
3	0084238	INNER AIR INTAKE SHROUD	1	EA
4	0081117	COVER ASSY	1	EA
5	0082288	WELDMENT DOOR COWLING LF	1	EA
6	0082290	WELDMENT DOOR COWLING RF	1	EA
7	0082293	WELDMENT DOOR COWLING LR	1	EA
8	0082294	WELDMENT DOOR COWLING RR	1	EA
9	0082303	DOOR STOP MIDDLE	6	EA
10	0082304	WELDMENT COWLING SIDE LF	1	EA
11	0082307	WELDMENT, RH SIDE COWLING (CU)	1	EA
12	0082310	RAIL SIDE LR	1	EA
13	0082311	RAIL SIDE RR	1	EA
14	0083274	COWLING FRONT	1	EA
15	0082320	COVER TURNTABLE REAR	1	EA
17	0082321	GAS SPRING 17.1,10.8,105	6	EA
18	0082346	WELDMENT HINGE HALF LF	4	EA
19	0082349	WELDMENT HINGE HALF RF	4	EA
22	5510022	ADJUSTABLE LEEVER LATCH	6	EA
23	5561559	PUSH RETAINER, 3/8 ID 7/8 OD	8	EA
24	5560311	BALLSTUD GAS SPRING	12	EA
26	5560531	BLT CRG .375-16 1.50	28	EA
27	986299	BOLT HEXHD .313-18 2.50 GR. 5	45	EA
28	5560033	NUT HEXHD .375-16 LKG	45	EA
29	970989	BOLT HEXHD .500-13 3.50 GR5	4	EA
30	986359	WASHER 1/2 MEDIUM FLAT	14	EA
31	987139	WASHER LOCK .500	14	EA
33	970909	BOLT HEXHD .500-13 1.50 GR5	10	EA

Courtesy of Crane.Market

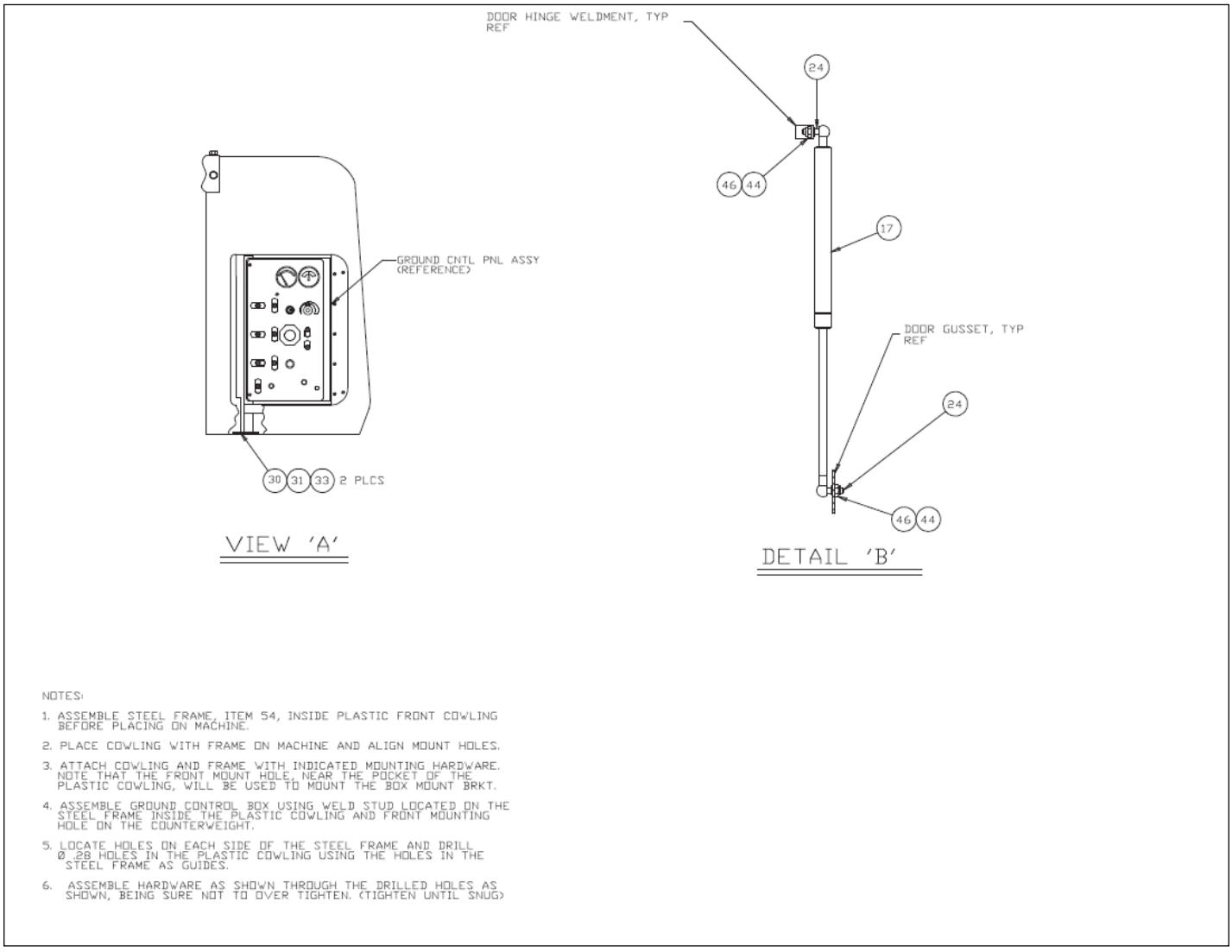

NOTES:

1. ASSEMBLE STEEL FRAME, ITEM 54, INSIDE PLASTIC FRONT COWLING BEFORE PLACING ON MACHINE.
2. PLACE COWLING WITH FRAME ON MACHINE AND ALIGN MOUNT HOLES.
3. ATTACH COWLING AND FRAME WITH INDICATED MOUNTING HARDWARE. NOTE THAT THE FRONT MOUNT HOLE, NEAR THE POCKET OF THE PLASTIC COWLING, WILL BE USED TO MOUNT THE BOX MOUNT BRKT.
4. ASSEMBLE GROUND CONTROL BOX USING WELD STUD LOCATED ON THE STEEL FRAME INSIDE THE PLASTIC COWLING AND FRONT MOUNTING HOLE ON THE COUNTERWEIGHT.
5. LOCATE HOLES ON EACH SIDE OF THE STEEL FRAME AND DRILL Ø .28 HOLES IN THE PLASTIC COWLING USING THE HOLES IN THE STEEL FRAME AS GUIDES.
6. ASSEMBLE HARDWARE AS SHOWN THROUGH THE DRILLED HOLES AS SHOWN, BEING SURE NOT TO OVER TIGHTEN. (TIGHTEN UNTIL SNUG)

Courtesy of Crane.Market

Item	Part No.	Name	Qty	Uom
34	970469	BOLT HEXHD .375-16 1.00 GR. 5	8	EA
36	0073158	SPACER SANDBLAST KIT	2	EA
43	970369	CAPSCREW 5/16-18	6	EA
44	986269	WASHER 5/16 MEDIUM FLAT	18	EA
45	5569833	SPEED NUT 5/16-18 UNC W/CAPTIVE NUT	6	EA
46	5560031	NUT HEX LKG .313-18	12	EA
47	970489	CAPSCREW 3/8-16 X 1-1/2 INCH LONG HEX HEAD GRADE 5	6	EA
48	5560083	TRIM LOC .125 RUBBER EDGE	24 FT	EA
49	0081671	OUTER AIR INTAKE SHROUD	1	EA
50	5560080	BUMPER ADHESIVE BACK-3M BUMPS	10	EA
51	5560686	CAPSCREW 3/8-16 X 6 INCH LONG HEX HEAD GRADE 5	2	EA
52	0082546	SHIM	6	EA
53	0082547	SHIM	4	EA
54	0162758	FRONT COWLING FRAME	1	EA
55	0084094	ACCESS COVER	2	EA

Courtesy of Crane.Market

REPAIR PARTS

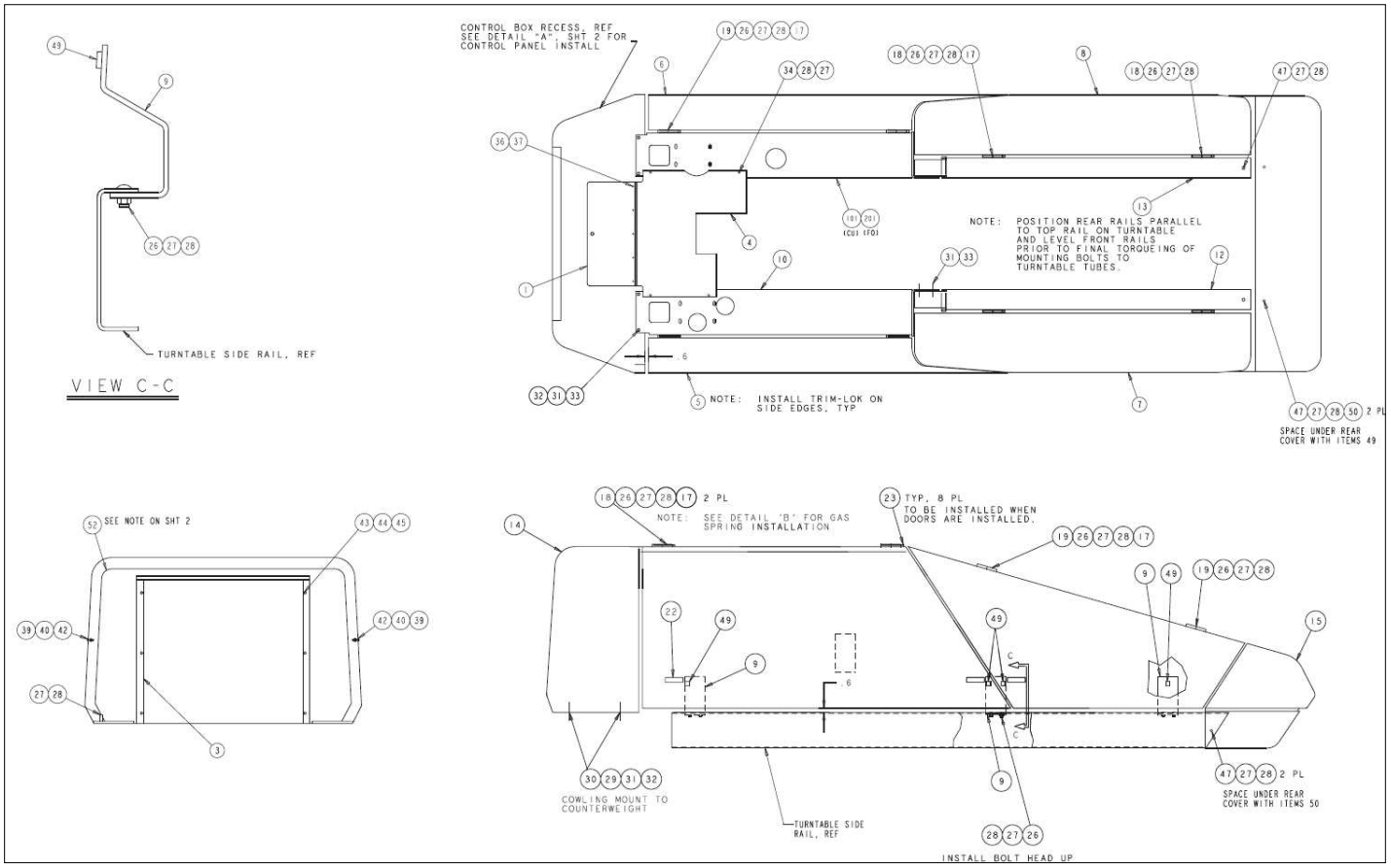

Courtesy of Crane.Market

Item	Part No.	Name	Qty	Uom
1	0073481	COVER ASSEMBLY	1	EA
3	0080626	SHROUD WELDMENT	1	EA
4	0081357	ACCESS COVER WELDMENT	1	EA
5	0082298	WELDMENT DOOR COWLING LF	1	EA
6	0082290	WELDMENT DOOR COWLING RF	1	EA
7	0082293	WELDMENT DOOR COWLING LR	1	EA
8	0082294	WELDMENT DOOR COWLING RR	1	EA
9	0082303	DOOR STOP MIDDLE	4	EA
10	0082304	WELDMENT COWLING SIDE LF	1	EA
12	0082310	RAIL SIDE LR	1	EA
13	0082311	RAIL SIDE RR	1	EA
14	0083274	COWLING FRONT	1	EA
15	0082320	COVER TURNTABLE REAR	1	EA
16	0112239	WELDMENT BOX MOUNT	1	EA
17	0082321	GAS SPRING 17.1,10.8,105	6	EA
18	0082346	WELDMENT HINGE HALF LF	4	EA
19	0082349	WELDMENT HINGE HALF RF	4	EA
21	0110483	REAR COVER WELDMENT GROUND CONTROL		EA
22	5510022	ADJUSTABLE LEEVER LATCH	6	EA
23	5561559	PUSH RETAINER, 3/8 ID 7/8 OD	8	EA
24	PNNA	BALL STUD	12	EA
26	PNNA	3/8-16 SHT SHLDR CARR BOLT X 1.5 LG	28	EA
27	PNNA	WASHER 3/8 FLAT	45	EA
28	5560033	NUT HEXHD .375-16 LKG	39	EA
29	PNNA	1/2-13 UNC X 2-1/2 LG HHCS GR5	4	EA

Courtesy of Crane.Market

Image does not exist

Courtesy of Crane.Market

Item	Part No.	Name	Qty	Uom
30	PNNA	WASHER 1/2 FLAT	4	EA
31	PNNA	WASHER 1/2 MED LOCK	12	EA
32	PNNA	NUT 1/2-13 UNC	8	EA
33	PNNA	1/2-13 UNC X 1-1/4 LG HHCS GR5	8	EA
34	PNNA	3/8-16 UNC X 1 LG HHCS GR5	4	EA
36	PNNA	M SCREW #10-24 X 1/2 LG TRUSS HD	5	EA
37	5560034	NUT HEX LKG 10-24	10	EA
38	PNNA	1/4-20 UNC X 3/4 LG TRUSS HD CS	5	EA
39	PNNA	1/4-20 UNC ESNA	7	EA
40	PNNA	WASHER 1/4 FLAT	7	EA
41	PNNA	M SCREW #10-24 X 1 LG TRUSS HD	5	EA
42	5560086	SCR HEXHD .25-20 1.00 W/SEMS	4	EA
43	PNNA	5/16-18 UNC X 1 LG HHCS GR5	6	EA
44	PNNA	WASHER 5/16 MED FLAT	18	EA
45	5569833	SPEED NUT 5/16-18 UNC W/CAPTIVE NUT	6	EA
46	PNNA	5/16-18 UNC NUT ESNA	12	EA
47	PNNA	3/8-16 UNC X 1-1/2 LG HHCS GR5	6	EA
48	5560083	TRIM LOC .125 RUBBER EDGE	26 FT	EA
49	5560080	BUMPER ADHESIVE BACK-3M BUMPS	10	EA
50	0082546	SHIM	6	EA
51	0082547	SHIM	12	EA
52	0162758	FRONT COWLING FRAME	1	EA
101	0082307	WELDMENT, RH SIDE COWLING (CU)	1	EA
201	0083923	WELDMENT, RH SIDE COWLING (FO)	1	EA

Courtesy of Crane.Market

REPAIR PARTS

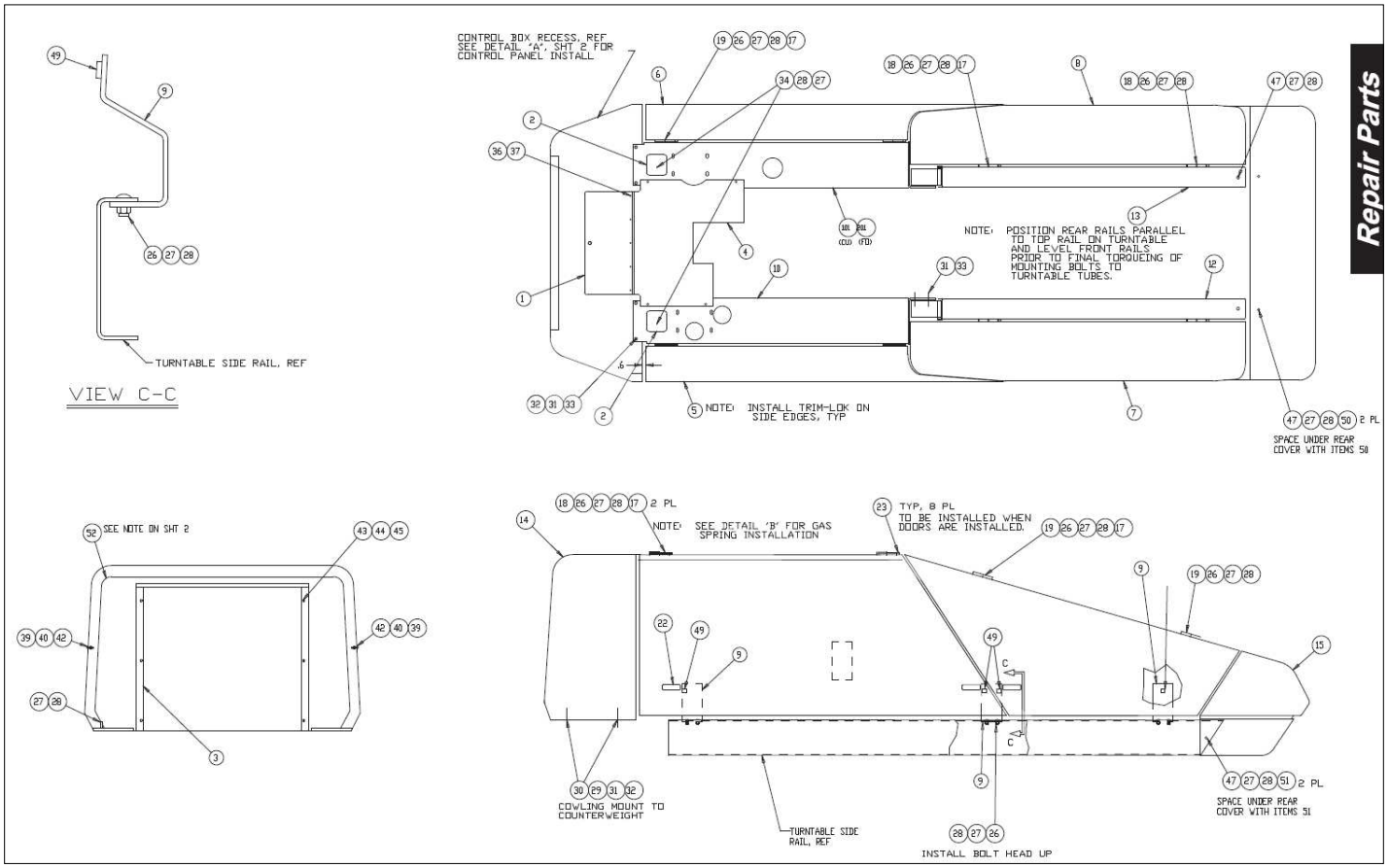

Courtesy of Crane.Market

Item	Part No.	Name	Qty	Uom
1	0073481	COVER ASSEMBLY	1	EA
2	0084094	ACCESS COVER	2	EA
3	0080626	SHROUD WELDMENT	1	EA
4	0081357	ACCESS COVER WELDMENT	1	EA
5	0082288	WELDMENT DOOR COWLING LF	1	EA
6	0082290	WELDMENT DOOR COWLING RF	1	EA
7	0082293	WELDMENT DOOR COWLING LR	1	EA
8	0082294	WELDMENT DOOR COWLING RR	1	EA
9	0082303	DOOR STOP MIDDLE	6	EA
10	0082304	WELDMENT COWLING SIDE LF	1	EA
12	0082310	RAIL SIDE LR	1	EA
13	00822311	RAIL SIDE RR	1	EA
14	0083274	COWLING FRONT	1	EA
15	0082320	COVER TURNTABLE REAR	1	EA
16	0112239	WELDMENT BOX MOUNT	1	EA
17	0082321	GAS SPRING 17.1,10.8,105	6	EA
18	0082346	WELDMENT HINGE HALF LF	4	EA
19	0082349	WELDMENT HINGE HALF RF	4	EA
21	0110483	REAR COVER WELDMENT GROUND CONTROL		EA
22	5510022	ADJUSTABLE LEEVER LATCH	6	EA
23	5561559	PUSH RETAINER, 3/8 ID 7/8 OD	8	EA
24	5560331	CAPSCREW 1/4-20 X 1 INCH LONG SOCKET FLAT HEAD	12	EA
26	5560531	BLT CRG .375-16 1.50	28	EA
27	986299	BOLT HEXHD .313-18 2.50 GR. 5	53	EA
28	5560033	NUT HEXHD .375-16 LKG	15	EA

Courtesy of Crane.Market

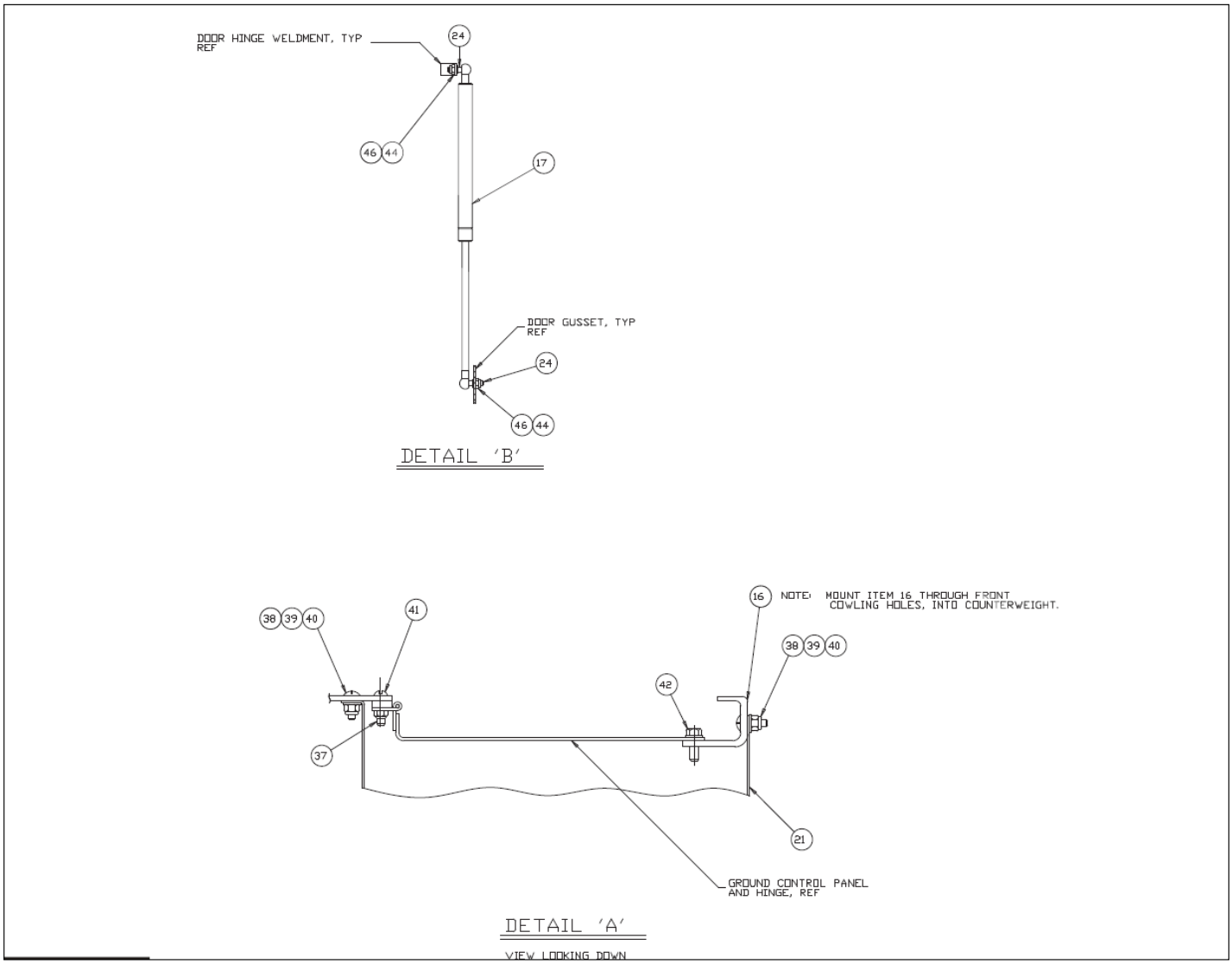

Courtesy of Crane.Market

Item	Part No.	Name	Qty	Uom
29	970949	CAPSCREW 1/2-13 X 2-1/2 INCH LONG HEX HEAD GRADE 5	4	EA
30	986359	WASHER 1/2 MEDIUM FLAT	4	EA
31	987139	WASHER LOCK .500	12	EA
32	984149	NUT 1/2-13 HEX	8	EA
33	970849	BOLT, HEXHD .500-13 1.25 GR5	6	EA
34	970469	BOLT HEXHD .375-16 1.00 GR. 5	8	EA
36	974659	SCREW RHD #10-24 X .50 PLATED	5	EA
37	5560034	NUT HEX LKG 10-24	5	EA
38	975089	1/4-20 UNC X 3/4 LG TRUSS HD CS	5	EA
39	5560004	NUT HEXHD .250-20 LKG	7	EA
40	986019	WASHER FLAT .250	7	EA
41	5560673	MACHINE SCREW #10-24NC X 1" LG	5	EA
42	5560086	SCR HEXHD .25-20 1.00 W/SEMS	2	EA
43	970259	BOLT HEXHD .313-18 1.00	6	EA
44	986269	WASHER 5/16 MEDIUM FLAT	18	EA
45	5569833	SPEED NUT 5/16-18 UNC W/CAPTIVE NUT	6	EA
46	5560031	NUT HEX LKG .313-18	12	EA
47	970489	CAPSCREW 3/8-16 X 1-1/2 INCH LONG HEX HEAD GRADE 5	6	EA
48	5560083	TRIM LOC .125 RUBBER EDGE	26 FT	EA
49	5560080	BUMPER ADHESIVE BACK-3M BUMPS	8	EA
50	0082546	SHIM	4	EA
51	0082547	SHIM	6	EA
52	0162758	FRONT COWLING FRAME	1	EA
101	0082307	WELDMENT, RH SIDE COWLING (CU)	1	EA

Courtesy of Crane.Market

Item	Part No.	Name	Qty	Uom
201	0083923	WELDMENT, RH SIDE COWLING (FO)	1	EA

Courtesy of Crane.Market

REPAIR PARTS

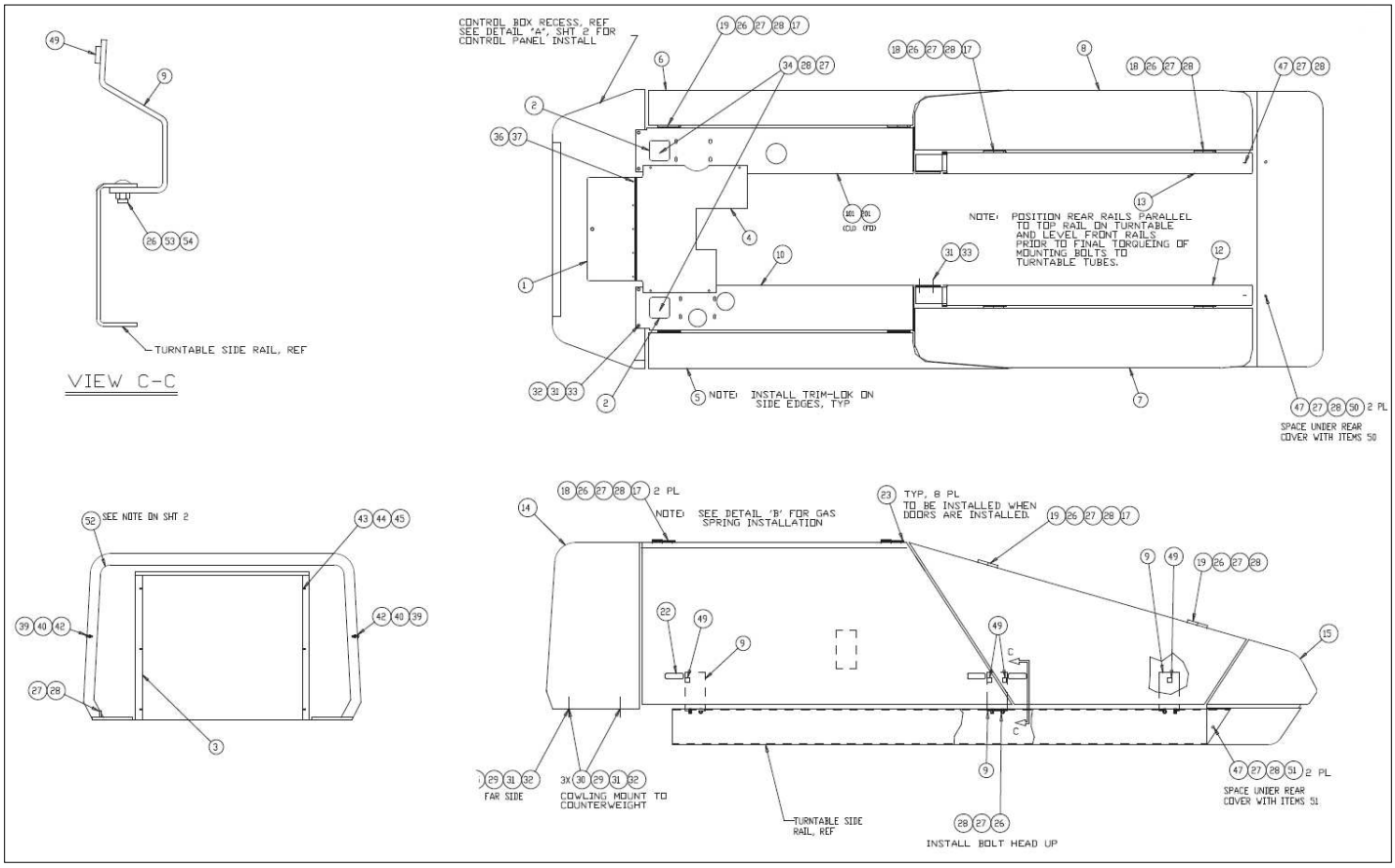

Courtesy of Crane.Market

Item	Part No.	Name	Qty	Uom
1	0073481	COVER ASSEMBLY	1	EA
2	0084094	ACCESS COVER	2	EA
3	0080626	SHROUD WELDMENT	1	EA
4	0081357	ACCESS COVER WELDMENT	1	EA
5	0082288	WELDMENT DOOR COWLING LF	1	EA
6	0082290	WELDMENT DOOR COWLING RF	1	EA
7	0082293	WELDMENT DOOR COWLING LR	1	EA
8	0082294	WELDMENT DOOR COWLING RR	1	EA
9	0082303	DOOR STOP MIDDLE	4	EA
10	0082304	WELDMENT COWLING SIDE LF	1	EA
12	0082310	RAIL SIDE LR	1	EA
13	00822311	RAIL SIDE RR	1	EA
14	0083274	COWLING FRONT	1	EA
15	0082320	COVER TURNTABLE REAR	1	EA
16	0112239	WELDMENT BOX MOUNT	1	EA
17	0082321	GAS SPRING 17.1,10.8,105	6	EA
18	0082346	WELDMENT HINGE HALF LF	4	EA
19	0082349	WELDMENT HINGE HALF RF	4	EA
21	0110483	REAR COVER WELDMENT GROUND CONTROL		EA
22	5510022	ADJUSTABLE LEEVER LATCH	6	EA
23	5561559	PUSH RETAINER, 3/8 ID 7/8 OD	8	EA
24	5560331	CAPSCREW 1/4-20 X 1 INCH LONG SOCKET FLAT HEAD	12	EA
26	5560531	BLT CRG .375-16 1.50	28	EA
27	986299	BOLT HEXHD .313-18 2.50 GR. 5	49	EA
28	5560033	NUT HEXHD .375-16 LKG	43	EA

Courtesy of Crane.Market

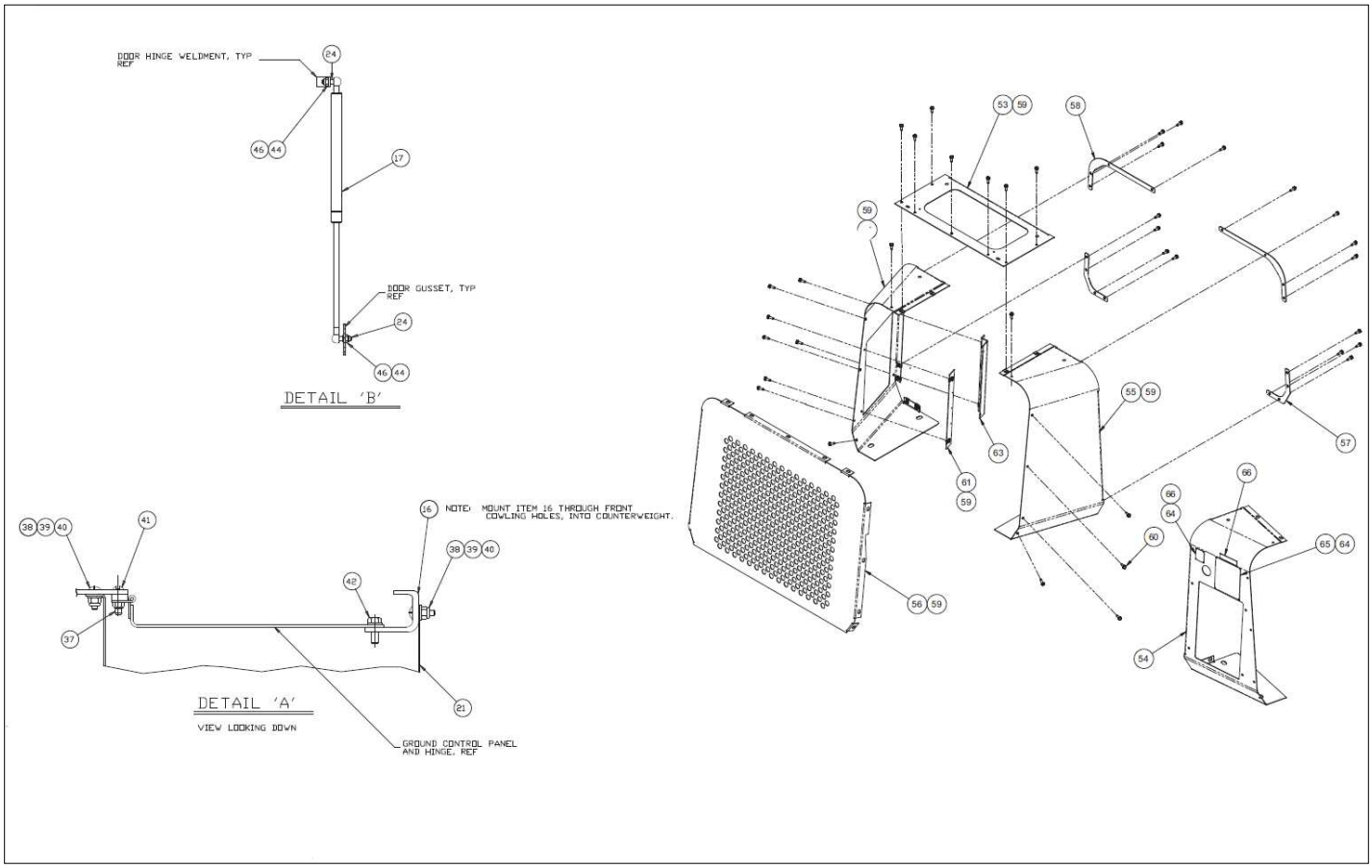

Courtesy of Crane.Market

Item	Part No.	Name	Qty	Uom
29	970949	CAPSCREW 1/2-13 X 2-1/2 INCH LONG HEX HEAD GRADE 5	4	EA
30	986359	WASHER 1/2 MEDIUM FLAT	4	EA
31	987139	WASHER LOCK .500	12	EA
32	984149	NUT 1/2-13 HEX	8	EA
33	970849	BOLT, HEXHD .500-13 1.25 GR5	8	EA
34	970469	BOLT HEXHD .375-16 1.00 GR. 5	8	EA
36	974659	SCREW RHD #10-24 X .50 PLATED	5	EA
37	5560034	NUT HEX LKG 10-24	10	EA
38	975089	1/4-20 UNC X 3/4 LG TRUSS HD CS	5	EA
39	5560004	NUT HEXHD .250-20 LKG	7	EA
40	986019	WASHER FLAT .250	7	EA
41	5560673	MACHINE SCREW #10-24NC X 1" LG	5	EA
42	5560086	SCR HEXHD .25-20 1.00 W/SEMS	4	EA
43	970259	BOLT HEXHD .313-18 1.00	6	EA
44	986269	WASHER 5/16 MEDIUM FLAT	18	EA
45	5569833	SPEED NUT 5/16-18 UNC W/CAPTIVE NUT	6	EA
46	5560031	NUT HEX LKG .313-18	12	EA
47	970489	CAPSCREW 3/8-16 X 1-1/2 INCH LONG HEX HEAD GRADE 5	6	EA
48	5560083	TRIM LOC .125 RUBBER EDGE	26 FT	EA
49	5560080	BUMPER ADHESIVE BACK-3M BUMPS	10	EA
50	0082546	SHIM	6	EA
51	0082547	SHIM	4	EA
52	0162758	FRONT COWLING FRAME	1	EA
53	0084342	FRONT COWLING CENTER	1	EA

Courtesy of Crane.Market

Item	Part No.	Name	Qty	Uom
54	0084343	FRONT COWLING RH	1	EA
55	0084344	FRONT COWLING LH	1	EA
56	0084529	FRONT COVER	1	EA
57	0084346	LOWER CORNER BRACE	2	EA
58	0084347	UPPER CORNER BRACE	2	EA
59	5563142	TAPPED BARREL U-MAX M8X1.25	37	EA
60	5563141	BOLT HX WASHER HD M8-1.25 X 25 DOG PT	37	EA
61	0084524	BAR BOX MOUNT	1	EA
63	0084525	Z BRACKET	1	EA
64	5560655	RVT POP .094 DIA .125 DMD STL	8	EA
65	0070901	PLAC CAUTN SERIAL NUMBER	1	EA
66	0074372	PLACARD ENGINE RPM	1	EA
67	0181562	DECAL MACH COMPLIES WITH ANSI-	1	EA
101	0082307	WELDMENT, RH SIDE COWLING (CU)	1	EA
201	0083923	WELDMENT, RH SIDE COWLING (FO)	1	EA

Courtesy of Crane.Market

REPAIR PARTS

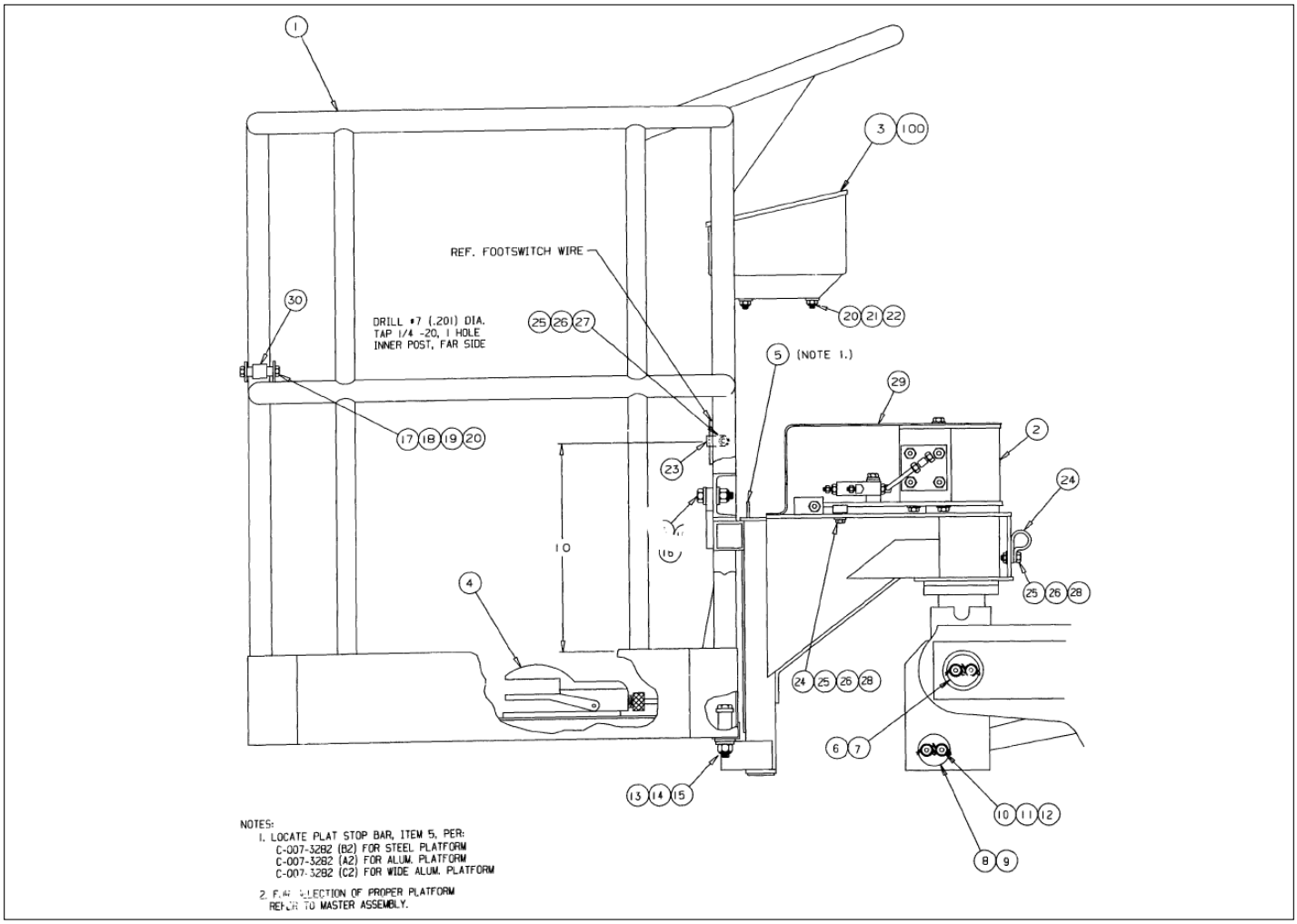

Courtesy of Crane.Market

Item	Part No.	Name	Qty	Uom
1	(NOTE 2)	PLATFORM WELDMENT	REF	EA
2	0072552	PLATFORM ROTATOR	1	EA
3	0081986	PLATFORM CONTROL BOX SUB-ASSY	1	EA
4	0071800	PLATFORM FOOT SWITCH	1	EA
5	0071859	PLATFORM STOP	1	EA
6	0070446	PIN, PLATFORM TO TIP BOOM	1	EA
7	0070132	PIN LOCK	1	EA
8	0070441	PIN, SLAVE LEVEL CYLINDER TO PLATFORM	1	EA
9	0070033	PIN LOCK	1	EA
10	0070473	CAPSCREW 5/16-18 DRILLED HEAD	4	EA
11	PNNA	WASHER, 5/16 MEDIUM LOCK	4	EA
12	9980012	.040 INCH DIAMETER STAINLESS STEEL SAFETY LOCKWIRE -(SOLD IN ONE POUND CAN)	1	EA
13	PNNA	CAPSCREW, 1/2-13 X 4" LG. HEX HD GR5	2	EA
14	PNNA	WASHER, 1/2 FLAT	8	EA
15	5560039	NUT LKG .500-13	4	EA
16	PNNA	CAPSCREW, 1/2-14 X 1-1/2 LG H.H. GR5	2	EA
17	0071951	GRAVITY GATE	1	EA
18	0071953	SPCR .451ID .500OD 1.88 STL	2	EA
19	PNNA	CAPSCREW, 3/8-16 X 2-3/4 LG H.H. GR5	2	EA
20	5560033	NUT HEXHD .375-16 LKG	6	EA
21	PNNA	CAPSCREW, 3/8-16 X 2 1/2 LG H.H. GR5	4	EA
22	PNNA	WASHER, 3/8 FLAT	8	EA
23	5093004	CLAMP	1	EA
24	5093027	CLAMP	2	EA

Courtesy of Crane.Market

Item	Part No.	Name	Qty	Uom
25	PNNA	CAPSCREW, 1/4-20 X 3/4 LG H.H. GR5	4	EA
26	PNNA	WASHER 1/4 FLAT	4	EA
27	PNNA	WASHER, 1/4 MEDIUM LOCK	1	EA
28	5560004	NUT HEXHD .250-20 LKG	3	EA
29	0070874	COVER, PLATFORM ROTATOR	1	EA
30	0150509	ROLLER	2	EA
100	0082184	OUTLET BOX – REFERENCE 0081986 PLATFORM CONTROL BOX SUB-ASSY	1	EA

Courtesy of Crane.Market

REPAIR PARTS

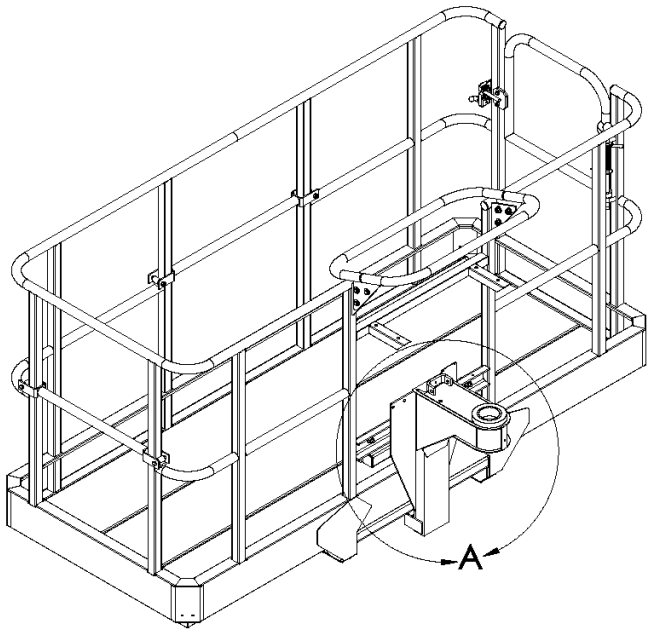

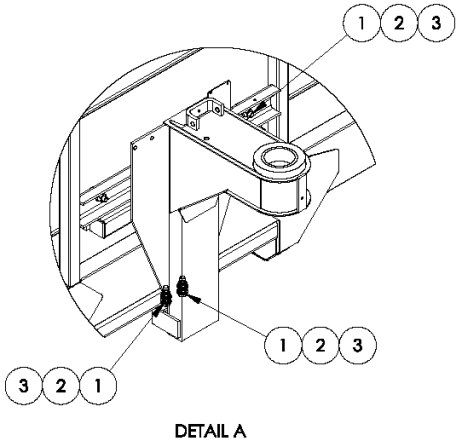

DETAIL A

Courtesy of Crane.Market

Item	Part No.	Name	Qty	Uom
1	970919	BLT HEXHD .500-13 1.75 GR5	4	EA
2	986359	WASHER 1/2 MEDIUM FLAT	8	EA
3	5560039	NUT LKG .500-13	4	EA

Courtesy of Crane.Market

REPAIR PARTS

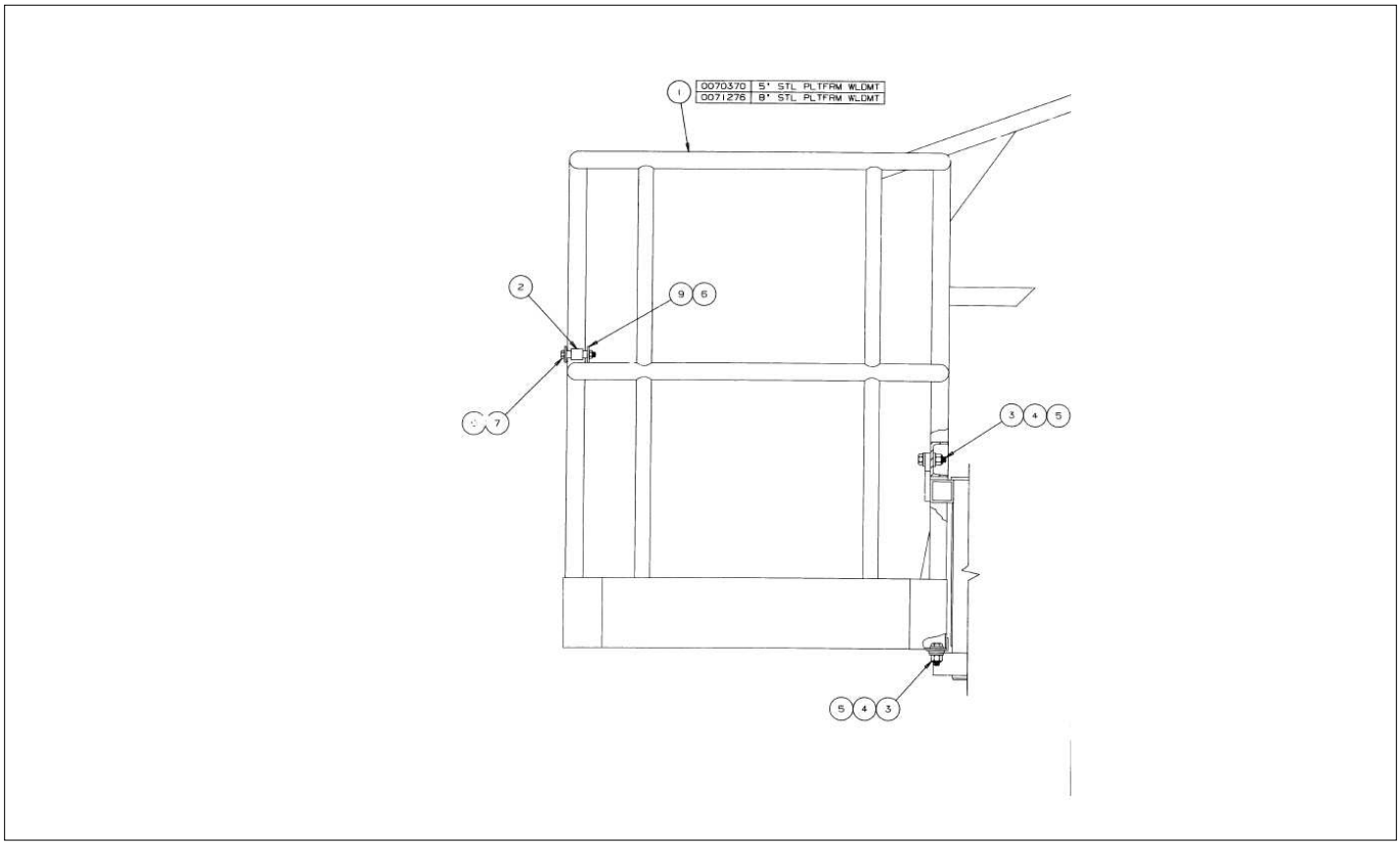

Courtesy of Crane.Market

Item	Part No.	Name	Qty	Uom
1	0070370	WLDMT PLATF 5'STL TB/ATB60/PRO	1	EA
Not Shown	0071276	WLDMNT PLAT 8'STL TB/PRO	1	EA
2	0150509	ROLLER	2	EA
3	970909	BOLT HEXHD .500-13 1.50 GR5	2	EA
4	986359	WASHER 1/2 MEDIUM FLAT	4	EA
5	5560039	NUT LKG .500-13	2	EA
6	0071953	SPCR .451ID .500OD 1.88 STL	2	EA
7	970529	CAPSCREW 3/8-16 X 2-1/2 INCH LONG HEX HEAD GRADE 5	6	EA
8	984109	NUT HEXHD .375-16	6	EA
9	0071951	GRAVITY GATE	1	EA

Courtesy of Crane.Market

REPAIR PARTS

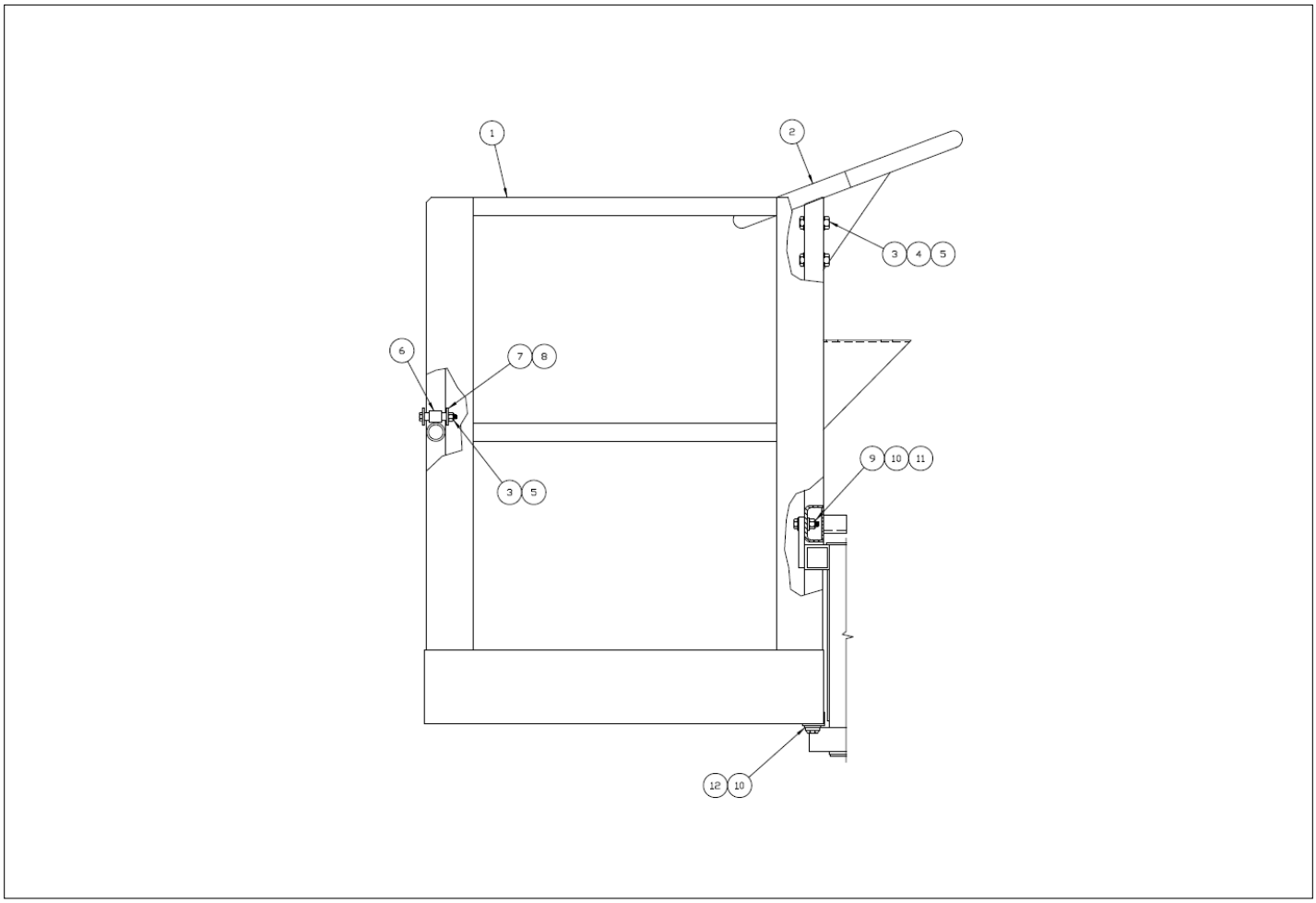

Courtesy of Crane.Market

Item	Part No.	Name	Qty	Uom
1	0082234	5' AL PLATFORM WLDMNT	1	EA
Not Shown	0082235	6' AL PLATFORM WLDMNT	1	EA
Not Shown	0082276	PLATFORM WELDMENT	1	EA
2	0161487	WELDMENT, CONTROL BOX HANDRAIL	1	EA
3	970529	CAPSCREW 3/8-16 X 2-1/2 INCH LONG HEX HEAD GRADE 5	6	EA
4	986299	BOLT HEXHD .313-18 2.50 GR. 5	8	EA
5	984109	NUT HEXHD .375-16	6	EA
6	0161182	ROLLER, GRAVITY GATE	2	EA
7	016117728	GRAVITY GATE SERVICE KIT – KIT INCLUDES ITEMS 6 THROUGH 10	1	EA
8	0161184	SPACER, GRAVITY GATE 1.5	2	EA
9	970909	BOLT HEXHD .500-13 1.50 GR5	2	EA
10	986359	WASHER 1/2 MEDIUM FLAT	4	EA
11	5560039	NUT LKG .500-13	2	EA
12	970889	CAPSCREW 1/2-13 X 1 INCH LONG HEX HEAD GRADE 5	2	EA

Courtesy of Crane.Market

REPAIR PARTS

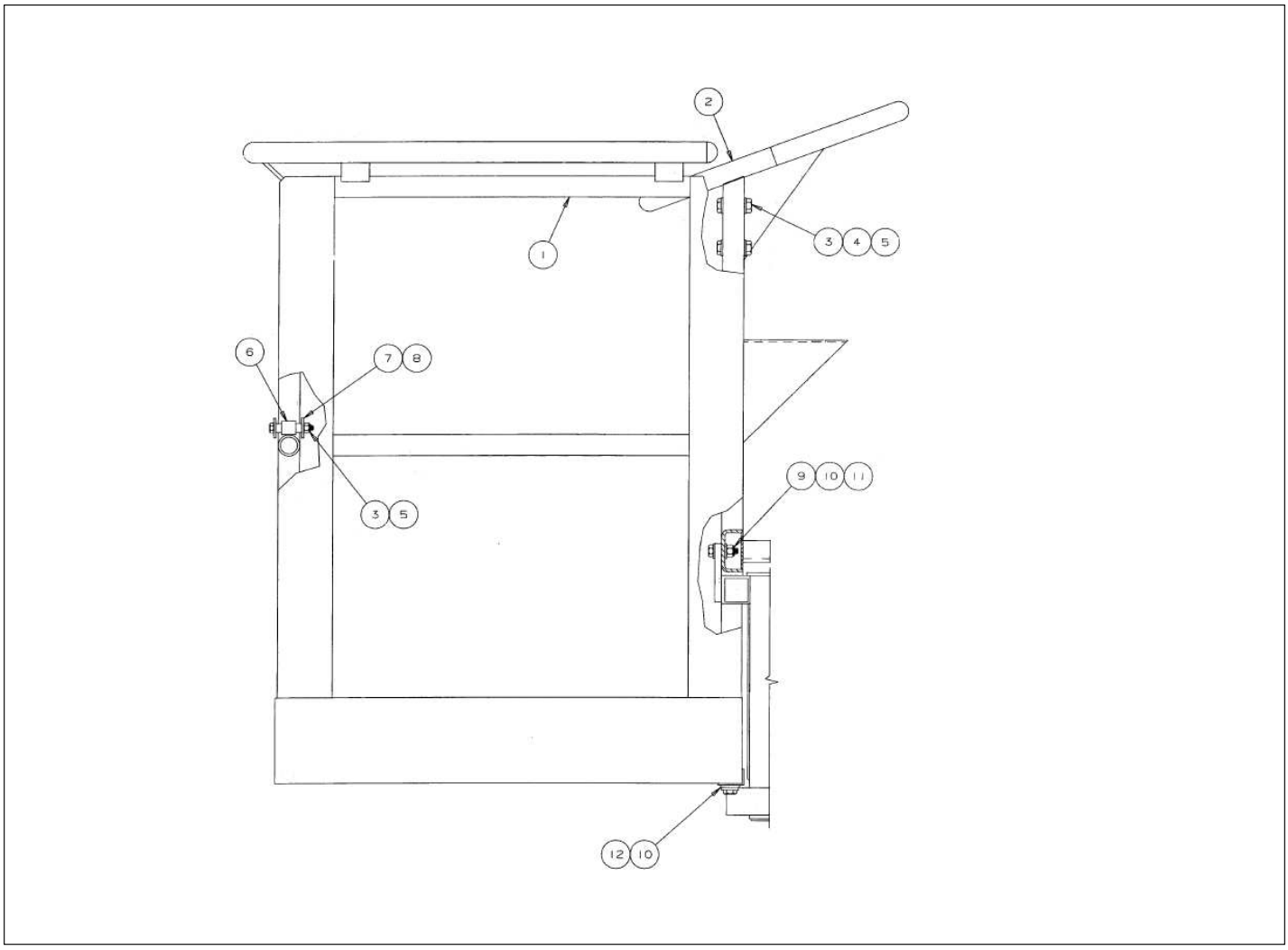

Courtesy of Crane.Market

Item	Part No.	Name	Qty	Uom
1	REF	PLATFORM WELDMENT	1	EA
2	0161487	WELDMENT, CONTROL BOX HANDRAIL	1	EA
3	970529	CAPSCREW 3/8-16 X 2-1/2 INCH LONG HEX HEAD GRADE 5	6	EA
4	986299	BOLT HEXHD .313-18 2.50 GR. 5	8	EA
5	984109	NUT HEXHD .375-16	6	EA
6	0161182	ROLLER, GRAVITY GATE	2	EA
7	016117728	GRAVITY GATE SERVICE KIT – KIT INCLUDES ITEMS 6 THROUGH 10	1	EA
8	0161184	SPACER, GRAVITY GATE 1.5	2	EA
9	970909	BOLT HEXHD .500-13 1.50 GR5	2	EA
10	986359	WASHER 1/2 MEDIUM FLAT	4	EA
11	5560039	NUT LKG .500-13	2	EA
12	970889	CAPSCREW 1/2-13 X 1 INCH LONG HEX HEAD GRADE 5	2	EA

Courtesy of Crane.Market

REPAIR PARTS

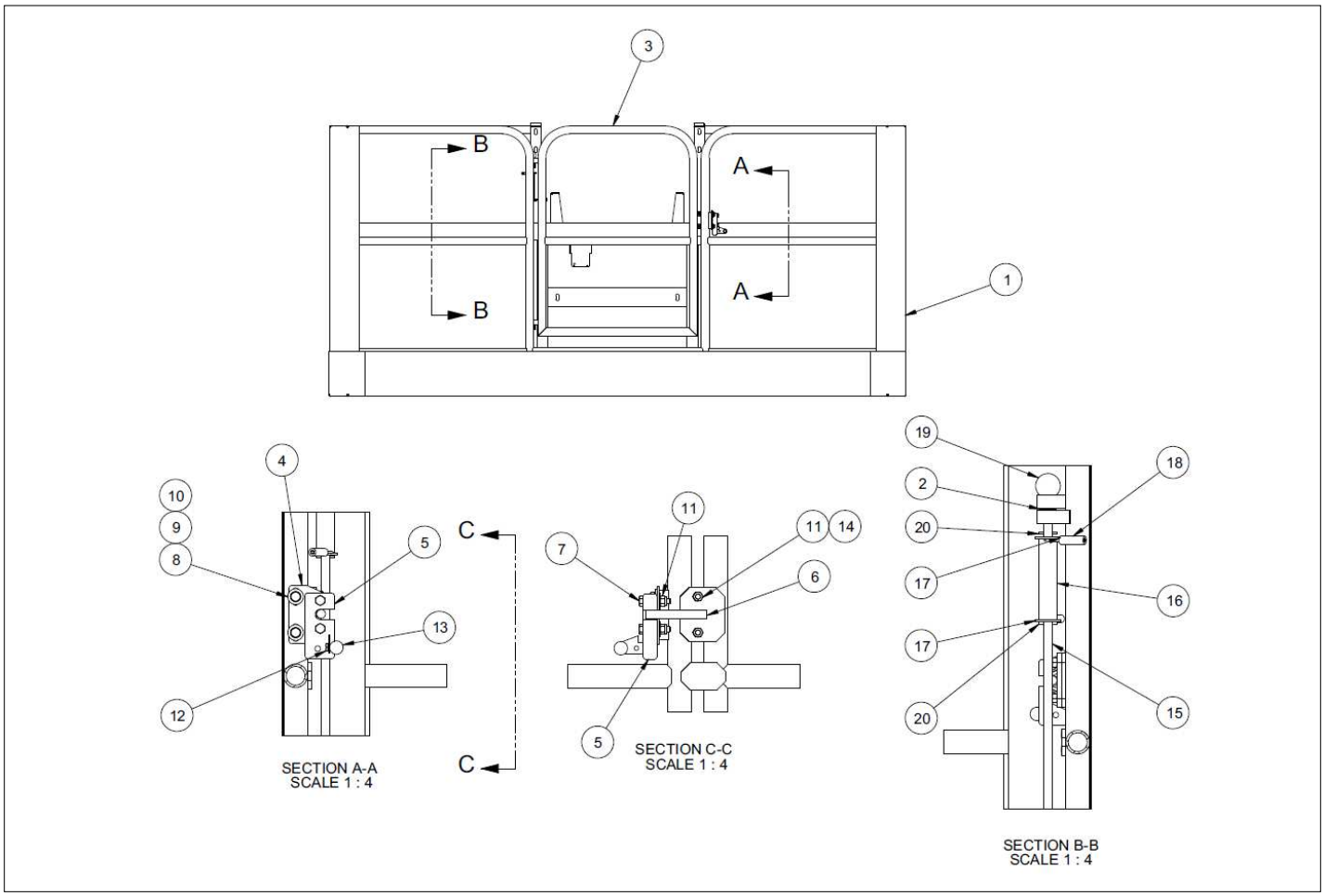

Courtesy of Crane.Market

Item	Part No.	Name	Qty	Uom
1	0161665	WLDMT 8' SG AL BSKT	1	EA
2	2572007	BRG .500ID .625OD .625	4	EA
3	0160970	WLDMT GATE AL PLATF	1	EA
4	0421519	PLT LATCH MNT SWING GATE	1	EA
5	300492	LATCH LH TRAY ROTARY LOCK	1	EA
6	0421529	WLDMT STRIKER SWING GATE	1	EA
7	970279	BLT HEXHD .313-18 1.50 GR5	2	EA
8	986269	WASHER 5/16 MEDIUM FLAT	4	EA
9	987109	WASHER LOCK .313	2	EA
10	970229	BLT HEXHD .313-18 .625 GR5 ZINC PLATED	2	EA
11	5560031	NUT HEX LKG .313-18	4	EA
12	970009	BLT HEXHD .250-20 .500 GR5-	1	EA
13	302555	KNOB ROUND .25-20NC FEMALE-DIMCO GRAY #222 BLACK 3/4 IN W/INSE	1	EA
14	972259	BLT FLSKTHD .313-18 1.00	2	EA
15	0322724	PIN, GATE HINGE (SWINGING GATE FOR 5 FT ALUMINUM PLATFORMS)	1	EA
16	0071837	SPRING, TORSION (SWINGING GATE FOR 5 FT ALUMINUM PLATFORMS)	1	EA
17	986359	WASHER 1/2 MEDIUM FLAT	2	EA
18	967299	HOSE, SAE30R2-04 TYPE 3 1/4 ID	2	EA
19	2667500	KNOB, GATE HINGE PIN (SWINGING GATE FOR 5 FT ALUMINUM PLATFORMS)	1	EA
20	5560056	ROLL PIN 1/8 INCH DIAMETER X 1 INCH LONG (SWINGING GATE FOR 5 FT ALUMINUM PLATFORMS)	2	EA

Courtesy of Crane.Market

REPAIR PARTS

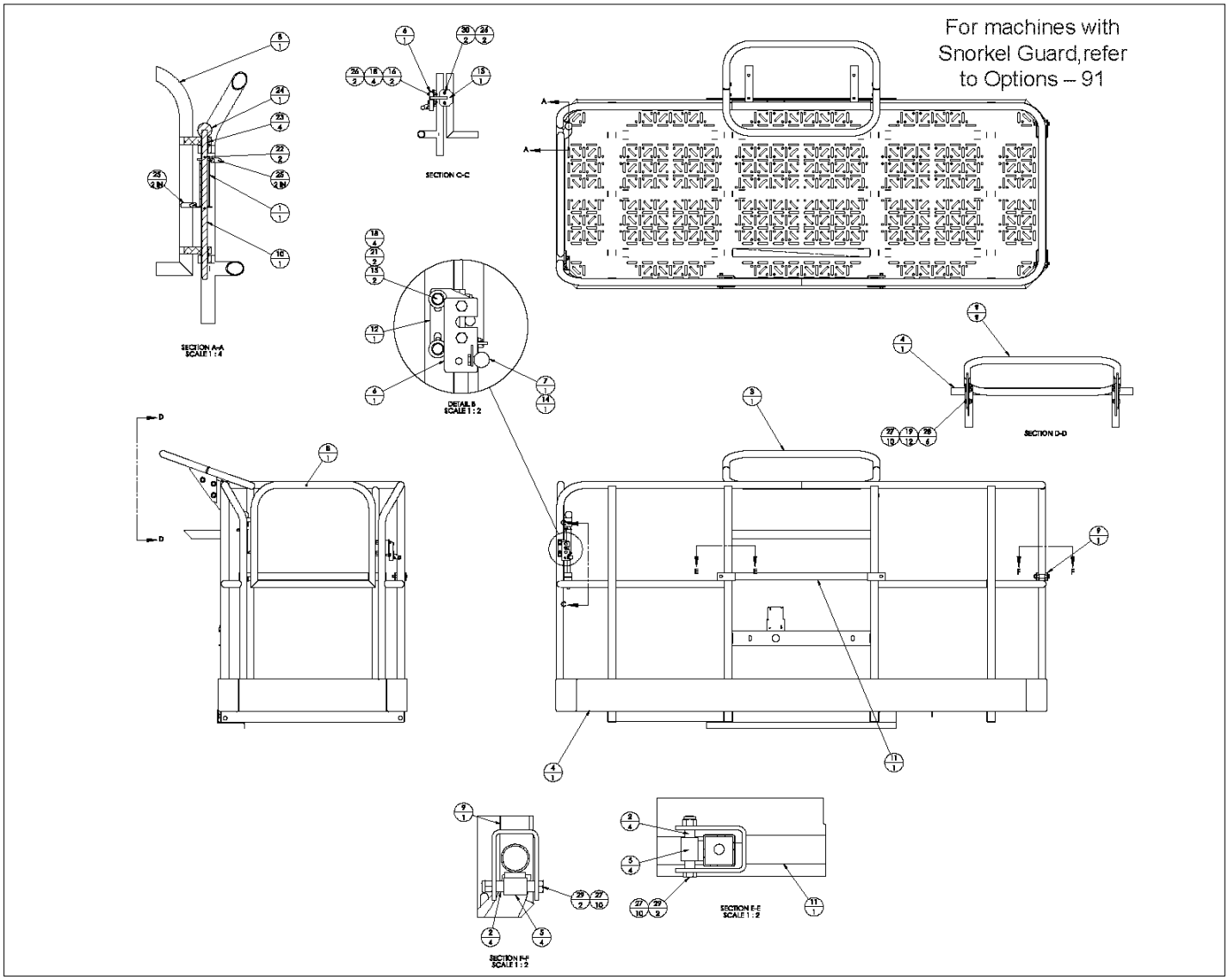

Courtesy of Crane.Market

Item	Part No.	Name	Qty	Uom
Not Shown	0084538	ASSY PLATFORM STL	1	EA
1	0071837	SPRING, TORSION (SWINGING GATE FOR 5 FT ALUMINUM PLATFORMS)	1	EA
2	0071953	SPCR .451ID .500OD 1.88 STL	4	EA
3	0074096	GUARD WLDMT PLATF BOX	1	EA
4	0084466	WELDMENT PLATFORM	1	EA
5	0150509	ROLLER	4	EA
6	300492	LATCH LH TRAY ROTARY LOCK	1	EA
7	302555	KNOB ROUND .25-20NC FEMALE-DIMCO GRAY #222 BLACK 3/4 IN W/INSE	1	EA
8	0420198	GATE SWING SIDE 36 X 96 STL PLATFORM	1	EA
9	0420199	WLDMT GATE GRAVITY SIDE 36X96	1	EA
10	0420632	PIN GATE HINGE PLATFORM	1	EA
11	0421321	WLDMT GG FRONT 36X96 STL PLAT	1	EA
12	0421519	PLT LATCH MNT SWING GATE	1	EA
13	0421529	WLDMT STRIKER SWING GATE	1	EA
14	970009	BLT HEXHD .250-20 .500 GR5-	1	EA
15	970239	BOLT HEXHD .313-18 .75 GR. 5	2	EA
16	970279	BLT HEXHD .313-18 1.50 GR5	2	EA
18	986269	WASHER 5/16 MEDIUM FLAT	4	EA
19	986299	BOLT HEXHD .313-18 2.50 GR. 5	12	EA
20	986359	WASHER 1/2 MEDIUM FLAT	2	EA
21	987109	WASHER LOCK .313	2	EA
22	988179	COTTER PIN 1/8 INCH DIAMETER X 1 INCH LONG (SWINGING GATE FOR 5 STEEL PLATFORMS)	2	EA

Courtesy of Crane.Market

Item	Part No.	Name	Qty	Uom
23	2572007	BRG .500ID .625OD .625	4	EA
24	2667500	KNOB, GATE HINGE PIN (SWINGING GATE FOR 5 FT ALUMINUM PLATFORMS)	1	EA
25	5010007	HOSE VACUUM .156 ID 4.0MM	4 IN	EA
26	5560031	NUT HEX LKG .313-18	4	EA
27	5560033	NUT HEXHD .375-16 LKG	10	EA
28	5560696	BLT HEXHD .375-16 1.12 GR5	6	EA
29	5569865	BLT HEXHD .375-16 X 2.75 GR5 ZP	4	EA
30	972259	BLT FLSKTHD .313-18 1.00	2	EA

Courtesy of Crane.Market

REPAIR PARTS

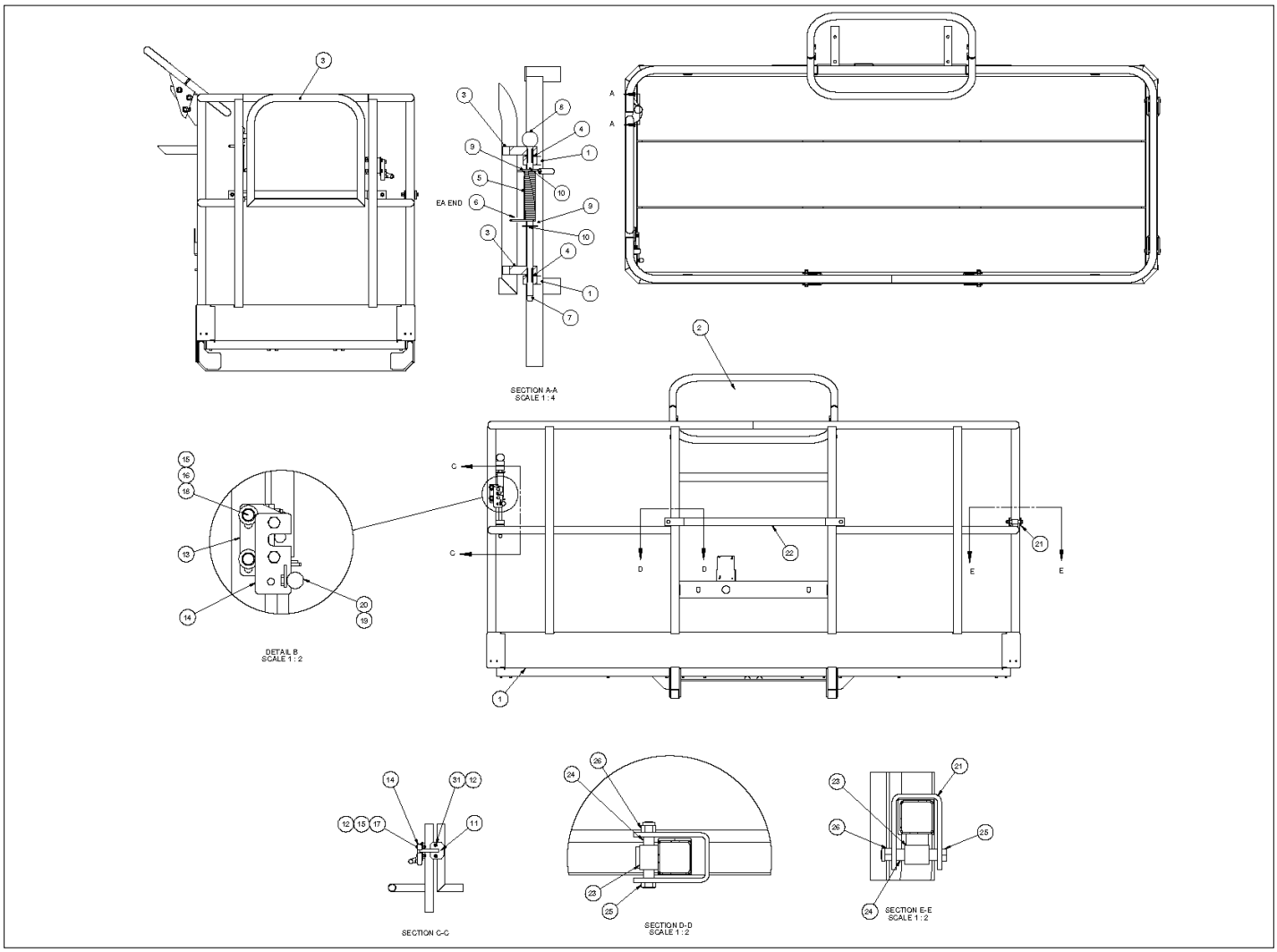

Courtesy of Crane.Market

Item	Part No.	Name	Qty	Uom
1	1430080	GLOBAL STD PLATFORM WELDMENT	1	EA
2	0074096	GUARD WLDMT PLATF BOX	1	EA
Not Shown	0113584	KIT, SNORKEL GUARD TRI ENTRY 8' STEEL	1	EA
Not Shown	0113531	ASSY SNORKEL GUARD		EA
3	1430099	WLDMT GATE SWING	1	EA
4	2572007	BRG .500ID .625OD .625	4	EA
5	0071837	SPRING, TORSION (SWINGING GATE FOR 5 FT ALUMINUM PLATFORMS)	1	EA
6	5010007	HOSE VACUUM .156 ID 4.0MM	0.33	EA
7	0420632	PIN GATE HINGE PLATFORM	1	EA
8	2667500	KNOB, GATE HINGE PIN (SWINGING GATE FOR 5 FT ALUMINUM PLATFORMS)	1	EA
9	986359	WASHER 1/2 MEDIUM FLAT	2	EA
10	988179	COTTER PIN 1/8 INCH DIAMETER X 1 INCH LONG (SWINGING GATE FOR 5 STEEL PLATFORMS)	2	EA
11	0421529	WLDMT STRIKER SWING GATE	1	EA
12	5560031	NUT HEX LKG .313-18	4	EA
13	0421519	PLT LATCH MNT SWING GATE	1	EA
14	300492	LATCH LH TRAY ROTARY LOCK	1	EA
15	986269	WASHER 5/16 MEDIUM FLAT	4	EA
16	987109	WASHER LOCK .313	2	EA
17	970279	BLT HEXHD .313-18 1.50 GR5	2	EA
18	970239	BOLT HEXHD .313-18 .75 GR. 5	2	EA
19	970009	BLT HEXHD .250-20 .500 GR5-	1	EA
20	302555	KNOB ROUND .25-20NC FEMALE-DIMCO GRAY #222 BLACK 3/4 IN W/INSE	1	EA

Courtesy of Crane.Market

Item	Part No.	Name	Qty	Uom
21	0420199	WLDMT GATE GRAVITY SIDE 36X96	1	EA
22	0421321	WLDMT GG FRONT 36X96 STL PLAT	1	EA
23	0150509	ROLLER	4	EA
24	0071953	SPCR .451ID .500OD 1.88 STL	4	EA
25	5569865	BLT HEXHD .375-16 X 2.75 GR5 ZP	4	EA
26	5560033	NUT HEXHD .375-16 LKG	10	EA
27	986299	BOLT HEXHD .313-18 2.50 GR. 5	12	EA
28	5560696	BLT HEXHD .375-16 1.12 GR5	6	EA
29	102271-082	PLATE - GRIPSTRUT 8FT	3	EA
30	5563310	HWH .25-14 SELF DRILLING X .75	36	EA
31	972259	BLT FLSKTHD .313-18 1.00	2	EA
Not Shown	0071425	PLAC PLATF IDENTIFICATION	1	EA
Not Shown	0075372	PLAC PLAT CAP 500LBS 2 PERSONS (NOT SHOWN)	1	EA
Not Shown	0090589E	PLACARD	3	EA
Not Shown	0112132	DECAL/PLAC TB80 PLATFORM (NOT SHOWN)	1	EA

Courtesy of Crane.Market

REPAIR PARTS

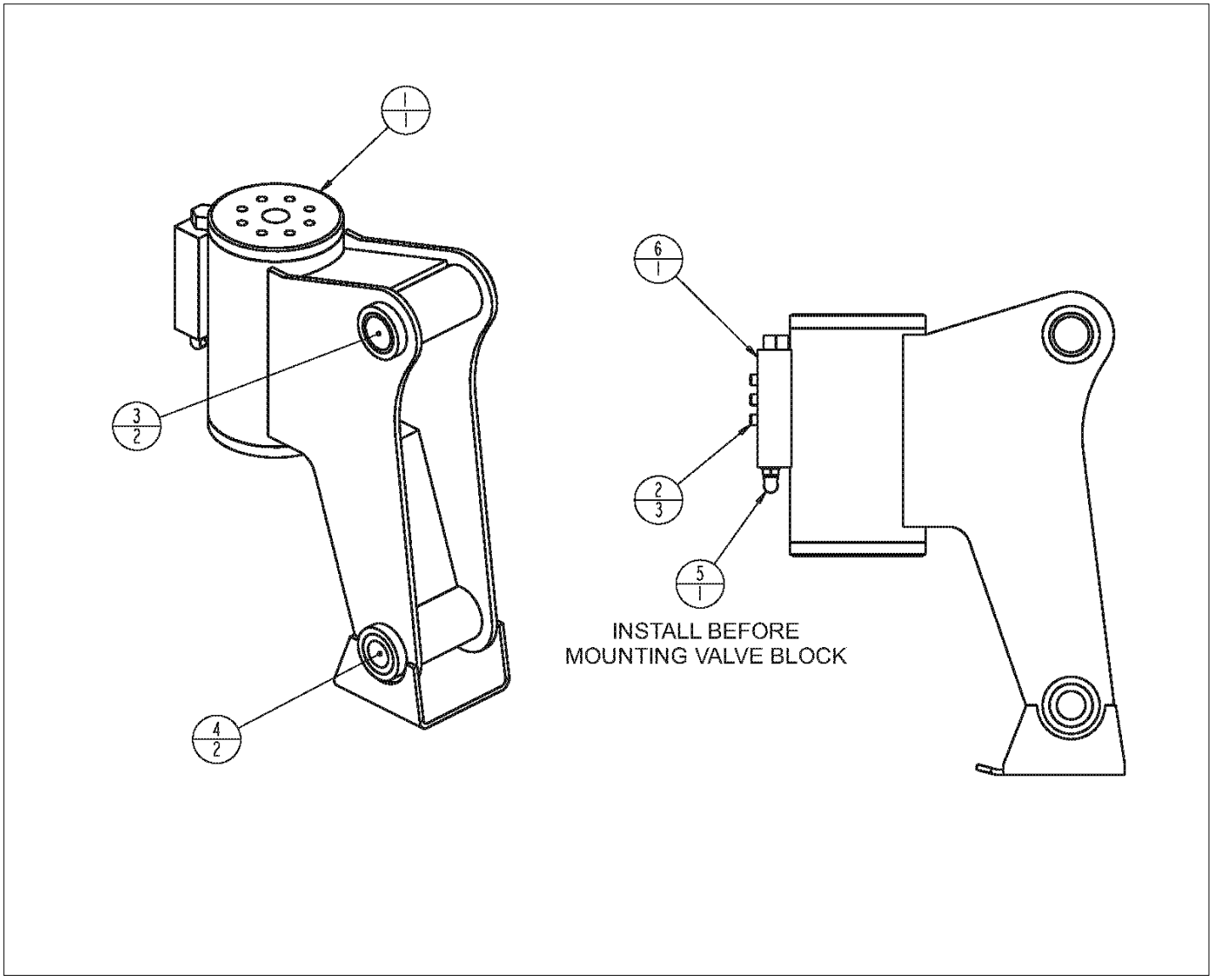

Courtesy of Crane.Market

Item	Part No.	Name	Qty	Uom
Not Shown	0420114	ASSEMBLY, ROTATOR PLATFORM	1	EA
1	0420113	HELAC ROTATOR	1	EA
Not Shown	8080152	SEAL KIT	1	EA
2	978419	CAPSCREW 1/4-20 X 1-1/2 INCH	3	EA
3	2500051	BEARING 1.25 ID X 1.50 OD X 1.50 LG	2	EA
4	2509677	BEARING 1.00 ID X 1.50 OD X 1.50 LG	2	EA
5	5035303	FTG ELB90STRTHD-4B-4S STL	1	EA
6	6019089	VALVE DUAL COUNTERBALANCE	1	EA

Courtesy of Crane.Market

REPAIR PARTS

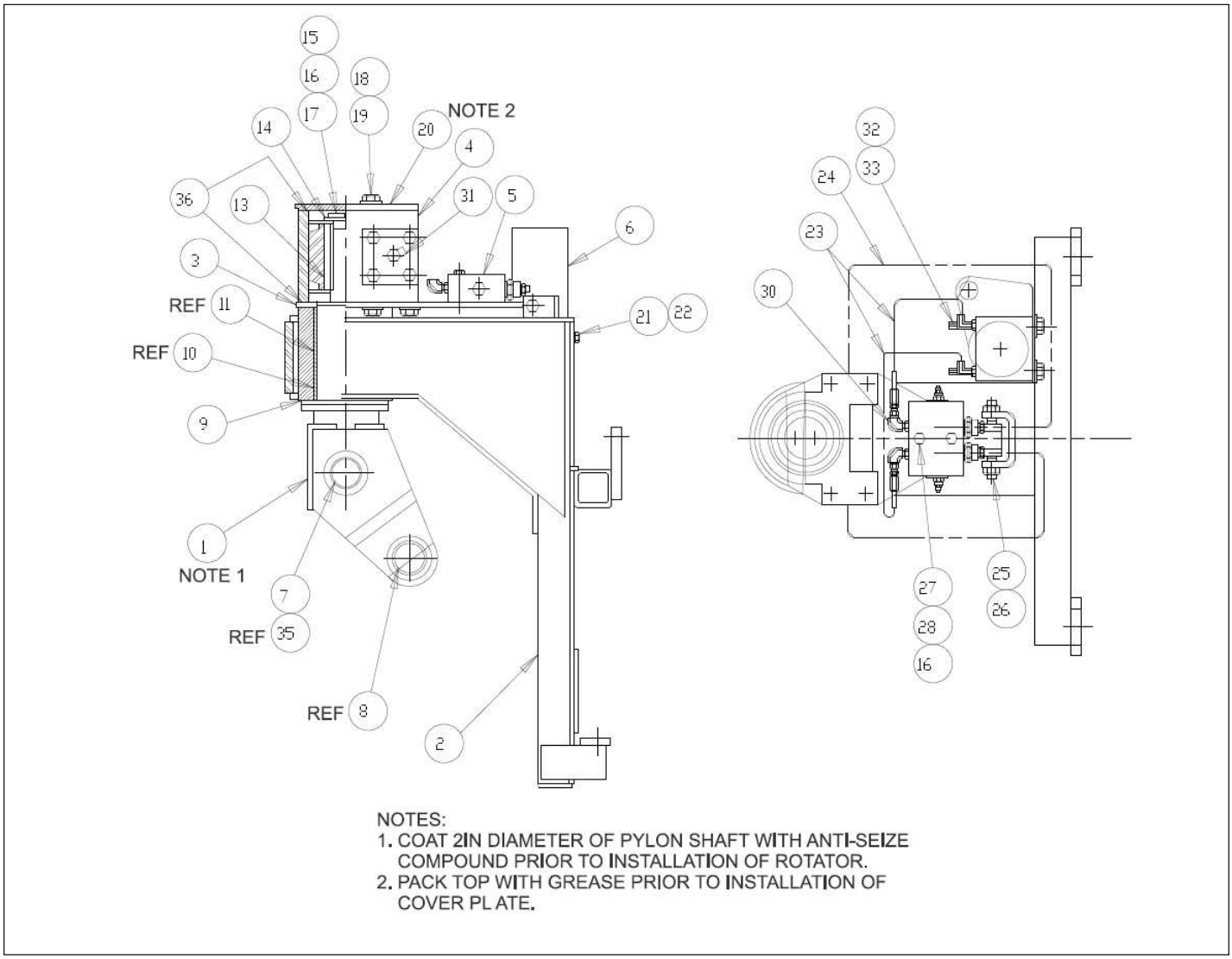

NOTES:
1. COAT 2IN DIAMETER OF PYLON SHAFT WITH ANTI-SEIZE COMPOUND PRIOR TO INSTALLATION OF ROTATOR.
2. PACK TOP WITH GREASE PRIOR TO INSTALLATION OF COVER PL ATE.

Courtesy of Crane.Market

Item	Part No.	Name	Qty	Uom
Not Shown	0180873	PLATFORM ROTATOR	1	EA
1	0180516	PYLON – PARKER ONLY	1	EA
2	0180509	ROTATOR FRAME	1	EA
3	0072818	TORQUE PLATE, PLATFORM ROTATOR	1	EA
4	0070570	HYD. ROTARY ACTUATOR	1	EA
5	6010541	DUAL CROSSOVER RELIEF VALVE	1	EA
6	6029631	HYDRAULIC POWER UNIT	1	EA
7	2502032	BEARING	REF	EA
8	2500038	BEARING	REF	EA
9	0072561	THRUST BEARING	1	EA
10	2504856	BEARING	REF	EA
11	0072562	BEARING SPACER	REF	EA
13	0070916	KEY	1	EA
14	0070132	PIN LOCK	1	EA
15	0070473	CAPSCREW 5/16-18 DRILLED HEAD	2	EA
16	987109	WASHER LOCK .313	4	EA
17	9980012	.040 INCH DIAMETER STAINLESS STEEL SAFETY LOCKWIRE -(SOLD IN ONE POUND CAN)	1	EA
18	970889	CAPSCREW 1/2-13 X 1 INCH LONG HEX HEAD GRADE 5	6	EA
19	987139	WASHER LOCK .500	6	EA
20	0072508	COVER PLATE, PLATFORM ROTATOR	1	EA
21	970449	CAPSCREW 3/8-16 X 3/4 INCH LONG HEX HEAD GRADE 5	2	EA
22	987119	BOLT HEXHD .375-16 1.75 GR. 5	2	EA
23	0070908	1/4 INCH HYDRAULIC HOSE	2	EA

Courtesy of Crane.Market

Item	Part No.	Name	Qty	Uom
24	0020283	HOSE -4-4S-4S 15.25 100R2	2	EA
25	970919	BLT HEXHD .500-13 1.75 GR5	2	EA
26	984409	NUT 1/2-13 HEX JAM DRILLED	2	EA
27	970299	CAPSCREW 5/16-18 X 2 LG HH	2	EA
28	986269	WASHER 5/16 MEDIUM FLAT	2	EA
30	5035318	FTG. ELB90STRTHD-6B-4S	4	EA
31	5035303	FTG ELB90STRTHD-4B-4S STL	2	EA
32	5036103	STRAIGHT THREAD RUN TEE	2	EA
33	5063701	CAP	2	EA
35	01800768	SPACER	REF	EA
36	7110348	O-RING	1	EA
Not Shown	7110157	O-RING – HELAC	1	EA

Courtesy of Crane.Market

REPAIR PARTS

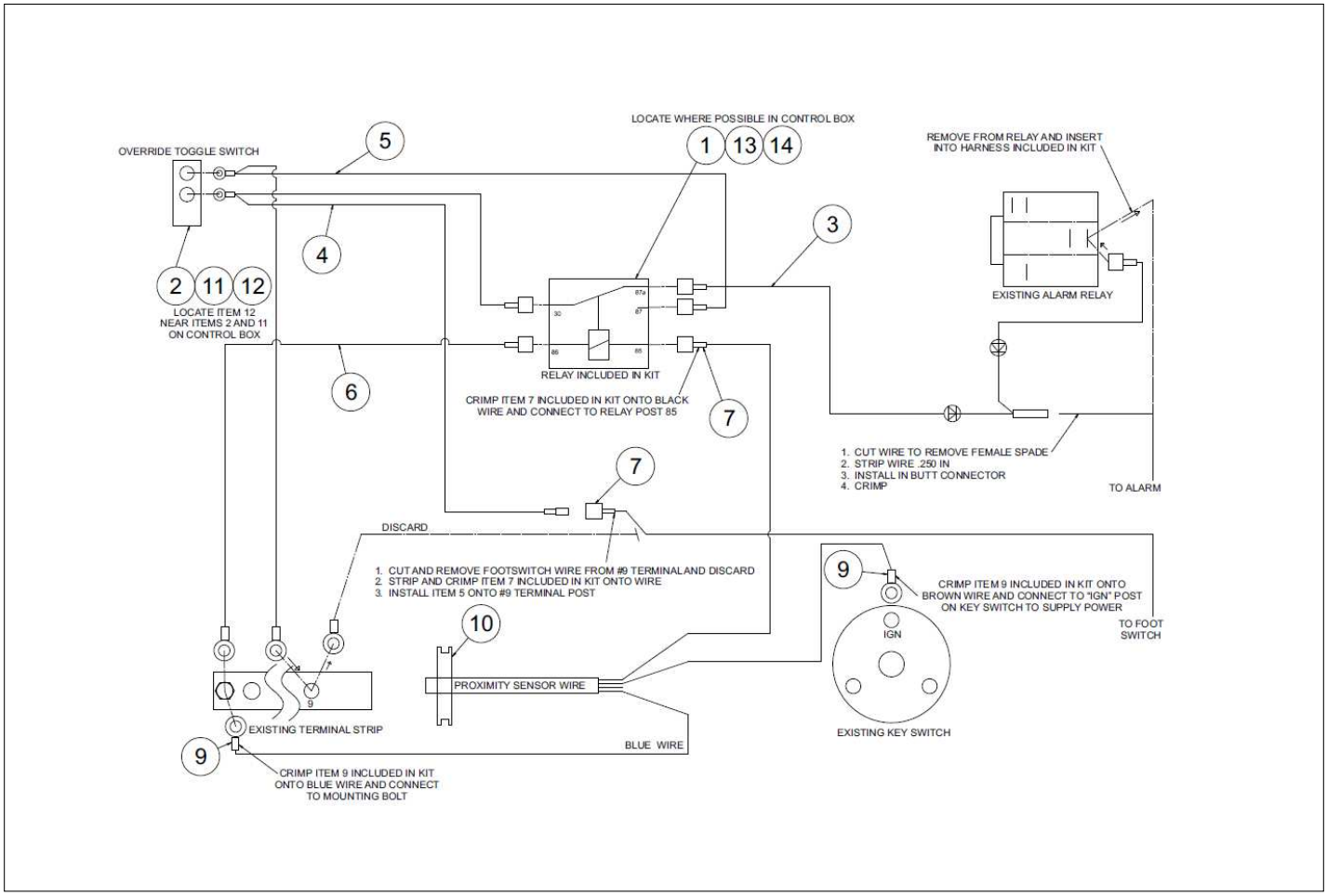

Courtesy of Crane.Market

Item	Part No.	Name	Qty	Uom
1	3040469	RELAY SPDT 12V 30AMP SONG	1	EA
2	3020080	SWITCH TOGGLE SPDT MOM/ON	1	EA
3	0113540	ASSY DIODE WIRE	1	EA
4	0113541	ASSY SWITCHED WIRE COMMON	1	EA
5	0113542	ASSY SWITCHED WIRE	1	EA
6	0071556	WIRE 16 R10I FEM250I 24	1	EA
7	3040083	TERM FEM250FI 16/14	2	EA
9	3044161	TERM R10I 16/14	2	EA
10	5569059	GROMMET .313ID .563DIAX.125GRV	1	EA
11	7030161	DECAL, SNORKEL GUARD OVERRIDE	1	EA
12	7030162	DECAL WARNING SNORKEL GUARD	1	EA
13	5560609	SCR TRHD 10-24 .50	1	EA
14	5560034	NUT HEX LKG 10-24	1	EA

Courtesy of Crane.Market

REPAIR PARTS

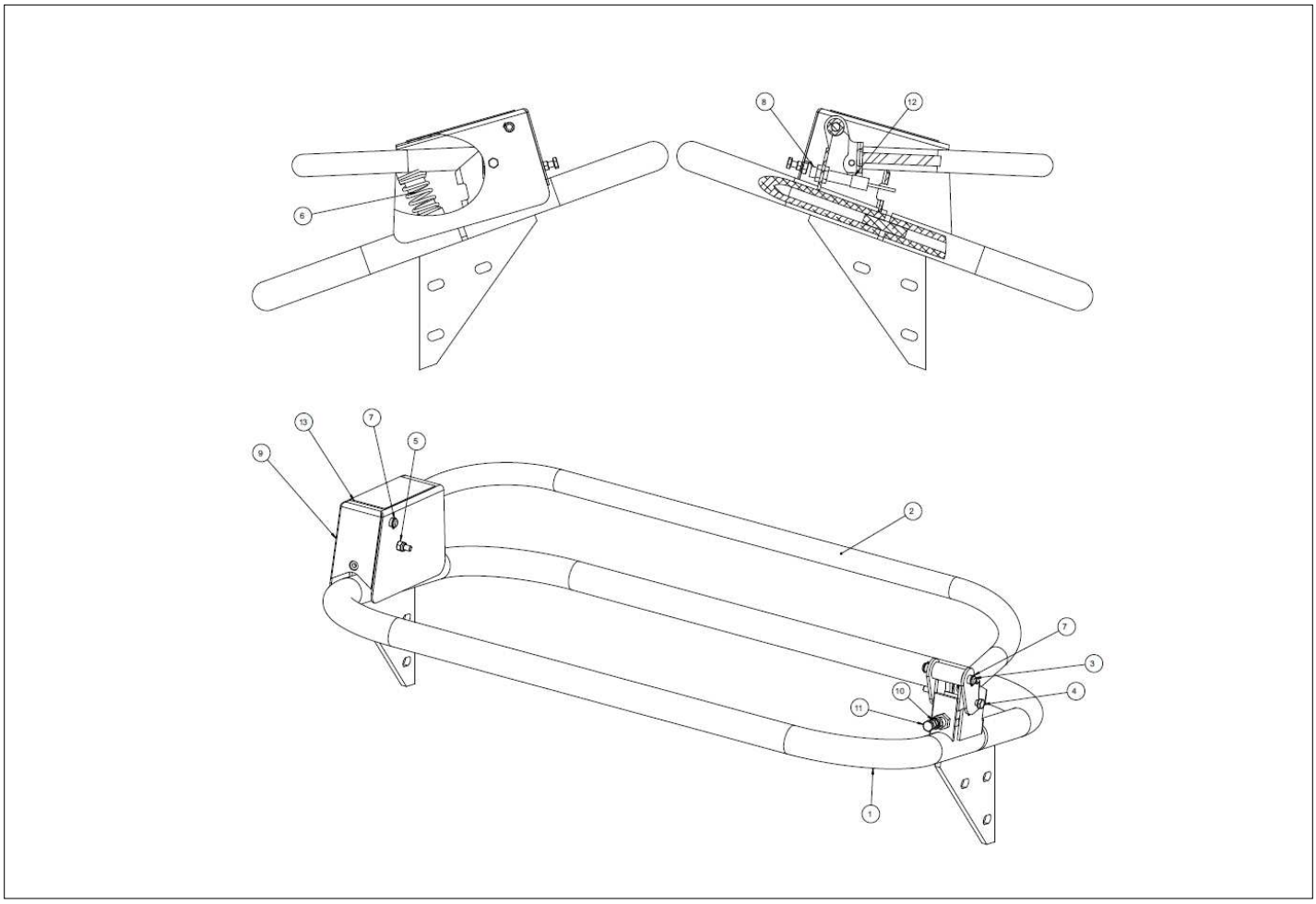

Courtesy of Crane.Market

Item	Part No.	Name	Qty	Uom
Not Shown	0113531	ASSY SNORKEL GUARD	1	EA
1	0113519	WELDMENT, ANTI-ENTRAPMENT	1	EA
2	0113529	WELDMENT, ACTIVATION BAR	1	EA
3	0113528	PIN, .375 X 2.31 GRIP	2	EA
4	056058-070	HHCS M6 X 1 X 70 G8.8 ISO DIN 931	2	EA
5	056066-006	NUT, HEX M6 X 1.0 GR 8.8 SELF LOCKING DIN 985	2	EA
6	0113530	SPRING, ANTI-ENTRAPMENT	1	EA
7	5592018	RETAINING RING, EXTERNAL, .375 DIA, BASIC	4	EA
8	3028844	SENSOR, PROX INDUCTIVE 12MM	1	EA
9	0113538	WELDMENT, SHIELD	2	EA
10	984069	NUT HEX .250-20	1	EA
11	970029	CAPSCREW 1/4-20 X 3/4 INCH LONG HEX HEAD GRADE 5	1	EA
12	3014753	CABLE, M12 X 2M L	1	EA
13	7030163	DECAL SNORKEL GUARD OVERRIDE OPER	1	EA

Courtesy of Crane.Market

HYDRAULICS

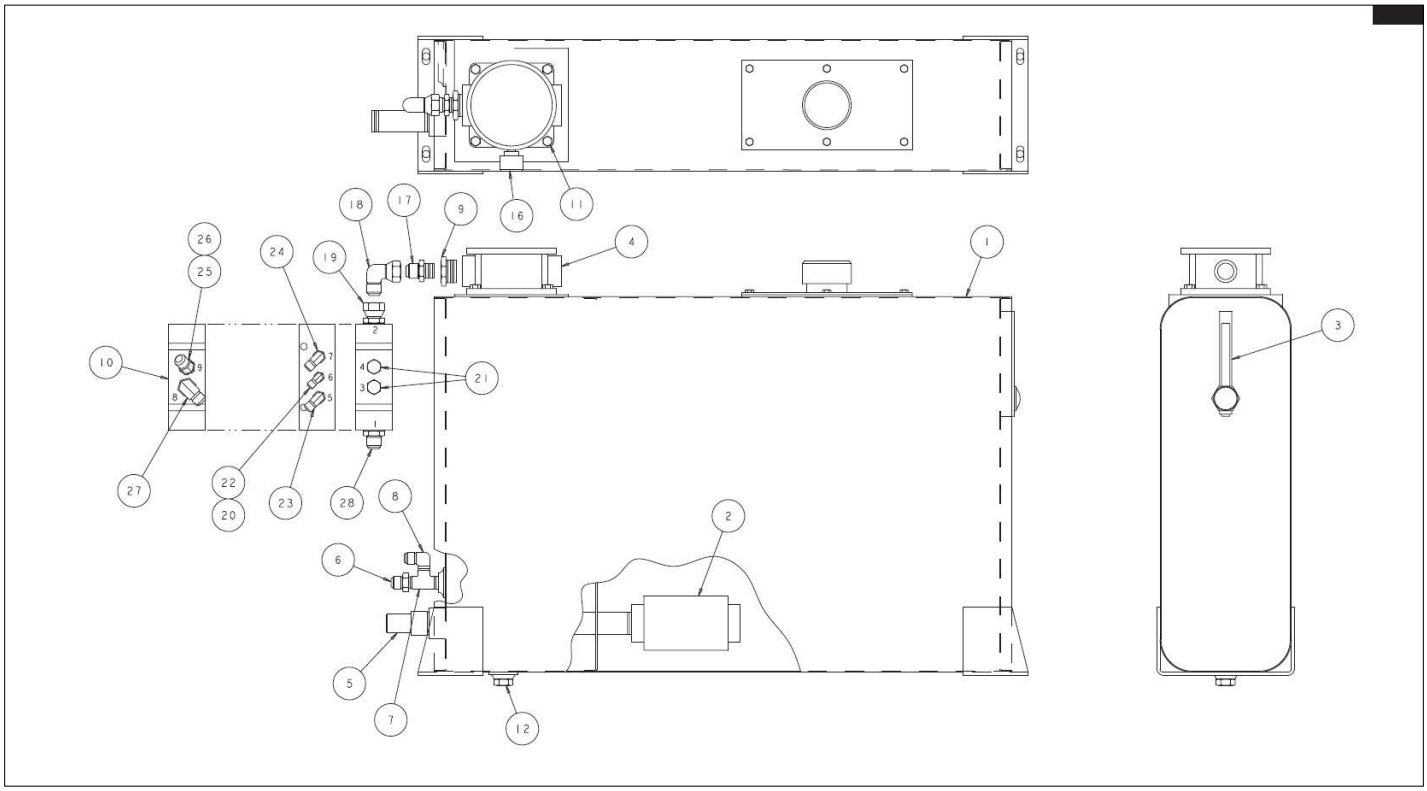

Courtesy of Crane.Market

Item	Part No.	Name	Qty	Uom
1	0081562	HYDRAULIC OIL RESERVOIR	1	EA
2	5080004	FILTER, SUMP STRAINER	1	EA
3	5090007	GAUGE LIQUID LEVEL W/THERM	1	EA
4	5080003	HYDRAULIC OIL FILTER ASSEMBLY	1	EA
Not Shown	5080007	O-RING	1	EA
Not Shown	5080008	GASKET	1	EA
Not Shown	5080009	FILTER ELEMENT	1	EA
5	0080425	OUTLET ADAPTER, 1-1/4" NPT	1	EA
6	5033614	FTG ADPTR MALE-8N-8S STL-2404	1	EA
7	7734204	STREET TEE-1/2 NPT STREET TEE	1	EA
8	5033713	FTG ELB90 MALE-8N-8S STL-PH 21	1	EA
9	7721208	REDUCER BUSHING (1-1/2 - 1 NPT)	1	EA
10	0110156	PRESSURE MANIFOLD	1	EA
11	PNNA	CAPSCREW 3/8-16 X 3-1/4" LG H.H.	4	EA
12	7714204	PLUG, 1/2NPT SQHD	1	EA
16	5080011	FILTER GAUGE	1	EA
17	5033621	MALE ADAPTER (-16)	1	EA
18	5037010	FTG ELB90SWVL-16S-16S STL	1	EA
19	5025002	ADAPTER STRAIGHT SWIVEL -16 SAE TO -16 JIC FEMALE	1	EA
20	5037003	SWIVEL NUT 90° ELBOW	1	EA
21	5075205	FTG PL HEX HD-8B STL	2	EA
22	5065705	FTG, ADAPTER STRTHD -6B-4S STL	1	EA
23	5035305	FTG ELB90STRTHD-6B-6S STL	1	EA

Courtesy of Crane.Market

Item	Part No.	Name	Qty	Uom
24	5035318	FTG. ELB90STRTHD-6B-4S	1	EA
25	5065709	ADAPTER STRAIGHT -8SAE TO -8JIC	1	EA
26	5036906	FTG ELB45SWVL-8S-8S STL	1	EA
27	5035322	FTG ELB90STRTHD-8B-10S STL	1	EA
28	5065718	FTG ADPTR STRTHD-16B-16S STL	1	EA

Courtesy of Crane.Market

HYDRAULICS

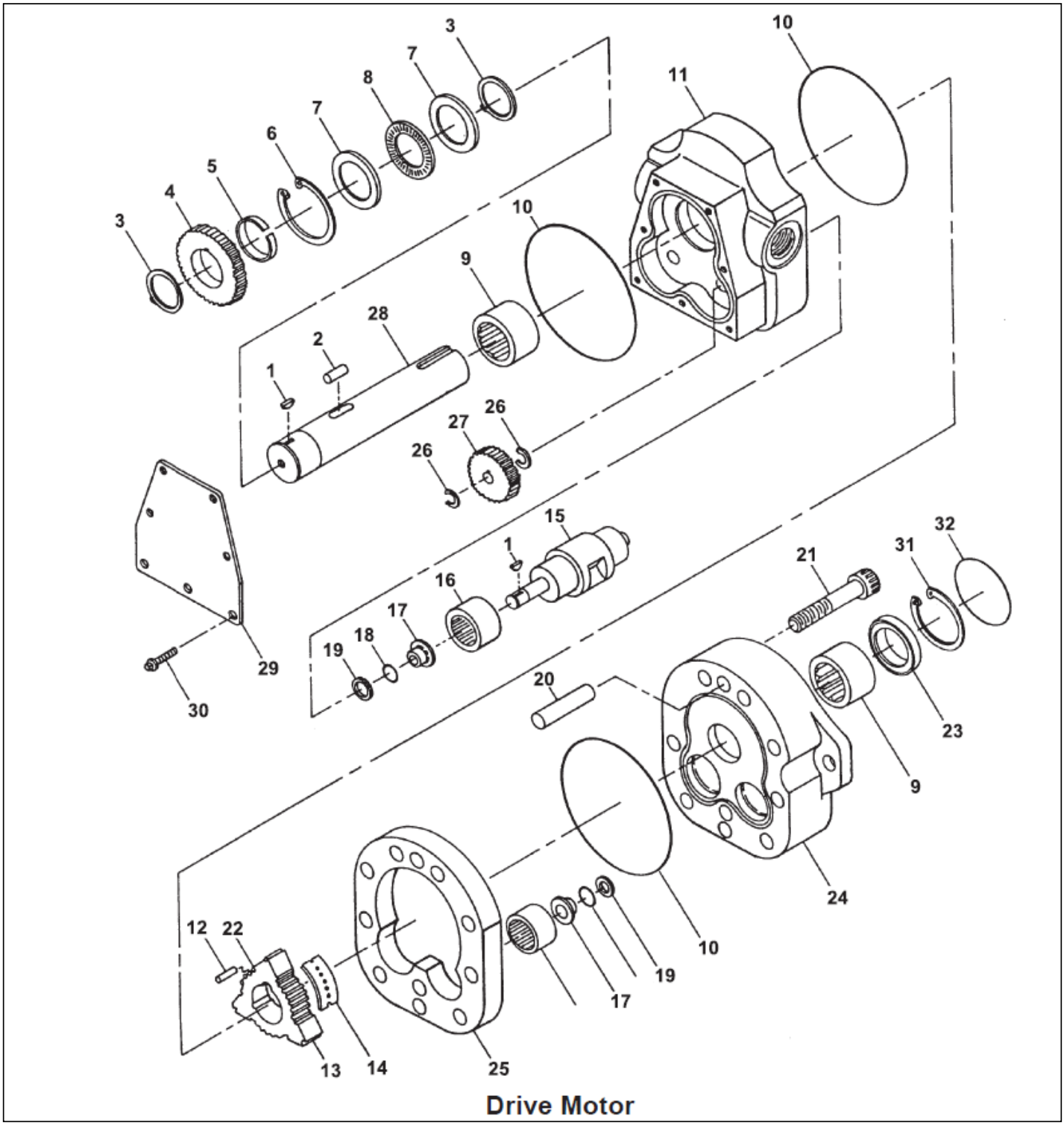

Drive Motor

Courtesy of Crane.Market

Item	Part No.	Name	Qty	Uom
Not Shown	6030018	HYDRAULIC MOTOR WITHOUT BRAKE (NOTE 4)	1	EA
1	8220126	WOODRUFF KEY	3	EA
2	8220127	DRIVE PIN	1	EA
3	8220005	RETAINING RING	2	EA
4	8220128	GEAR DRIVE	1	EA
5	8220129	SPACER WASHER	1	EA
6	8220130	RETAINING RING	1	EA
7	8220006	THRUST BEARING RACE	2	EA
8	8220007	THRUST BEARING	1	EA
9	8220027	NEEDLE BEARING	2	EA
10	8220131	OIL SEAL	3	EA
11	8220132	REAR END CAP	1	EA
12	8220133	TIP SEAL ROLLER	3	EA
13	8220134	ROTOR	1	EA
14	8220020	SEAL PLATE	3	EA
15	8220135	ABUTMENT VALVE	2	EA
16	8220028	NEEDLE BEARING	4	EA
17	28220030	STEP BEARING	4	EA
18	8220136	O-RING	4	EA
19	8220137	BACK-UP RING	4	EA
20	8220138	DOWEL PIN	4	EA
21	8220139	CAP SCREW	9	EA
22	8220140	BODY SEAL ROLLER	18	EA
23	8220146	SHAFT SEAL	1	EA
24	8220031	FRONT END CAP	1	EA
25	8220141	DISPLACEMENT HOUSING	1	EA
26	8220142	RETAINING RING	4	EA
27	8220143	GEAR PINION	2	EA
28	8220156	S-SHAFT	1	EA

Courtesy of Crane.Market

Item	Part No.	Name	Qty	Uom
29	8220147	GEAR COVER	1	EA
30	8220148	CAPSCREW	7	EA
31	8220144	RETAINING RING	1	EA
32	8220145	O-RING	1	EA
33	8220117	FRONT SEALING CAP	1	EA

Courtesy of Crane.Market

HYDRAULICS

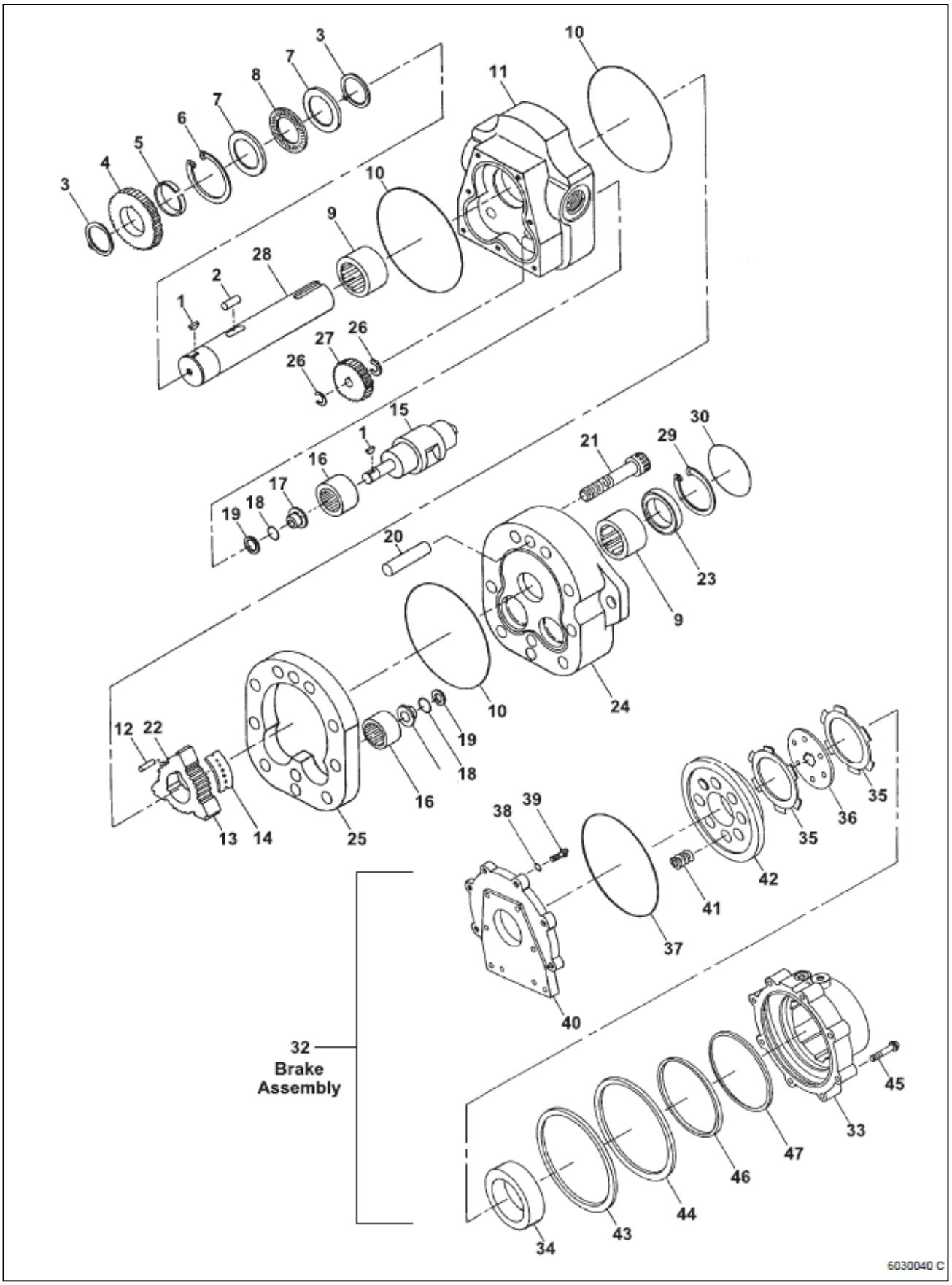

Courtesy of Crane.Market

Item	Part No.	Name	Qty	Uom
Not Shown	6030040	MTR W/BRAKE	1	EA
1	8220126	WOODRUFF KEY	3	EA
2	8220127	DRIVE PIN	1	EA
3	8220005	RETAINING RING	2	EA
4	8220128	GEAR DRIVE	1	EA
5	8220129	SPACER WASHER	1	EA
6	8220130	RETAINING RING	1	EA
7	8220006	THRUST BEARING RACE	2	EA
8	8220007	THRUST BEARING	1	EA
9	8220027	NEEDLE BEARING	2	EA
10	8220131	OIL SEAL	3	EA
11	8220132	REAR END CAP	1	EA
12	8220133	TIP SEAL ROLLER	3	EA
13	8220134	ROTOR	1	EA
14	8220020	SEAL PLATE	3	EA
15	8220135	ABUTMENT VALVE	2	EA
16	8220028	NEEDLE BEARING	4	EA
17	28220030	STEP BEARING	4	EA
18	8220136	O-RING	4	EA
19	8220137	BACK-UP RING	4	EA
20	8220138	DOWEL PIN	4	EA
21	8220139	CAP SCREW	9	EA
22	8220140	BODY SEAL ROLLER	18	EA
23	8220146	SHAFT SEAL	1	EA
24	8220031	FRONT END CAP	1	EA
25	8220141	DISPLACEMENT HOUSING	1	EA
26	8220142	RETAINING RING	4	EA
27	8220143	GEAR PINION	2	EA
28	8220017	S-SHAFT FOR BRAKE	1	EA

Courtesy of Crane.Market

Item	Part No.	Name	Qty	Uom
29	8220144	RETAINING RING	1	EA
30	8220145	O-RING	1	EA
31	8220117	FRONT SEALING CAP	1	EA
32	8220155	DRIVE MOTOR BRAKE, 4 CUBIC INCH	1	EA
Not Shown	8220038	BRAKE REPLACEMENT KIT	1	EA
33	KIT ITEM	HOUSING – NOT SOLD SEPARATELY	1	EA
34	8220150	SPACER RING	1	EA
35	8220014	FRICTION DISC	5	EA
36	8220015	DRIVER PLATE	4	EA
37	8220010	O-RING	1	EA
38	8220011	BRASS WASHER	7	EA
39	8220148	CAPSCREW	7	EA
40	PNNA	ADAPTER PLATE – KIT ITEM	1	EA
41	8220025	DIE SPRING	8	EA
42	8220153	PRESSURE PLATE	1	EA
43	8220009	BACK-UP RING	1	EA
44	28220008	O-RING	1	EA
45	8220154	CAP SCREW	8	EA
46	8220003	O-RING	1	EA
47	8220004	BACK-UP RING	2	EA

Courtesy of Crane.Market

HYDRAULICS

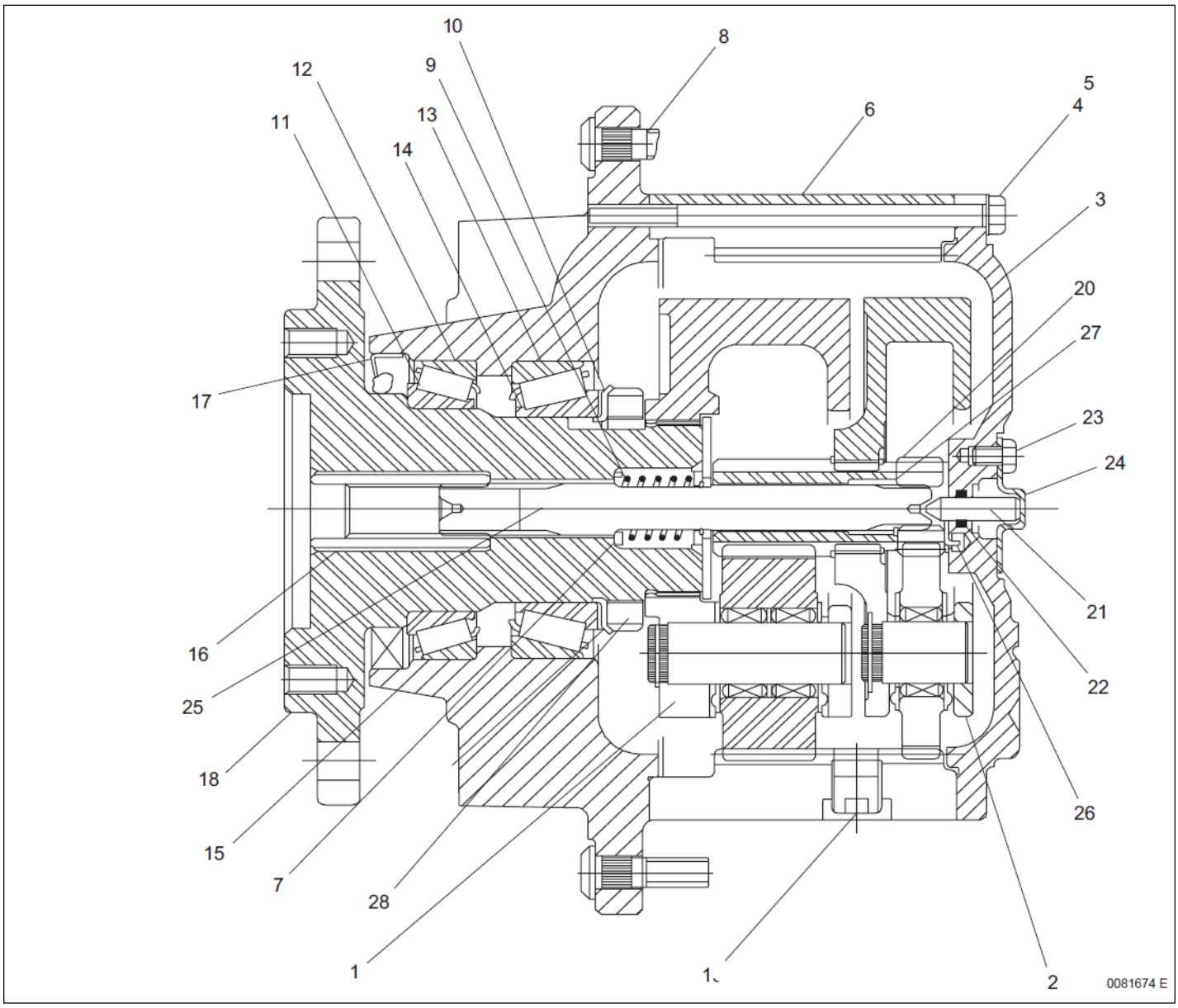

Courtesy of Crane.Market

Item	Part No.	Name	Qty	Uom
Not Shown	0081674	GEAR HUB, HIGH TORQUE	1	EA
1	8010106	SECONDARY CARRIER	1	EA
2	8010107	PRIMARY CARRIER	1	EA
3	8010097	COVER	1	EA
4	986299	BOLT HEXHD .313-18 2.50 GR. 5	12	EA
5	8010069	CAPSCREW HEX HEAD	12	EA
6	8010157	RING GEAR	1	EA
7	8010175	THRUST WASHER	2	EA
8	7280022	WHEEL BOLT	8	EA
9	8010151	SPRING	1	EA
10	8010173	THRUST WASHER	1	EA
11	8010031	BEARING CUP	1	EA
12	8010032	BEARING CONE	1	EA
13	8010029	BEARING CUP	1	EA
14	8010030	BEARING CONE	1	EA
15	8010186	HUB	1	EA
16	8010013	COUPLING	1	EA
17	8010027	OIL SEAL	1	EA
18	8010109	SPINDLE	1	EA
19	8010028	PIPE PLUG	1	EA
20	8010108	SUN GEAR	1	EA
21	8010143	PLUNGER	1	EA
22	8010149	O-RING	1	EA
23	8010168	CAPSCREW HEX HEAD	2	EA
24	8010080	DISENGAGE COVER	1	EA
25	8010169	INPUT SHAFT	1	EA
26	8010075	THRUST WASHER	1	EA
27	8010145	RETAINING RING	2	EA

Courtesy of Crane.Market

Item	Part No.	Name	Qty	Uom
28	8010150	RETAINER NUT	1	EA

Courtesy of Crane.Market

HYDRAULICS

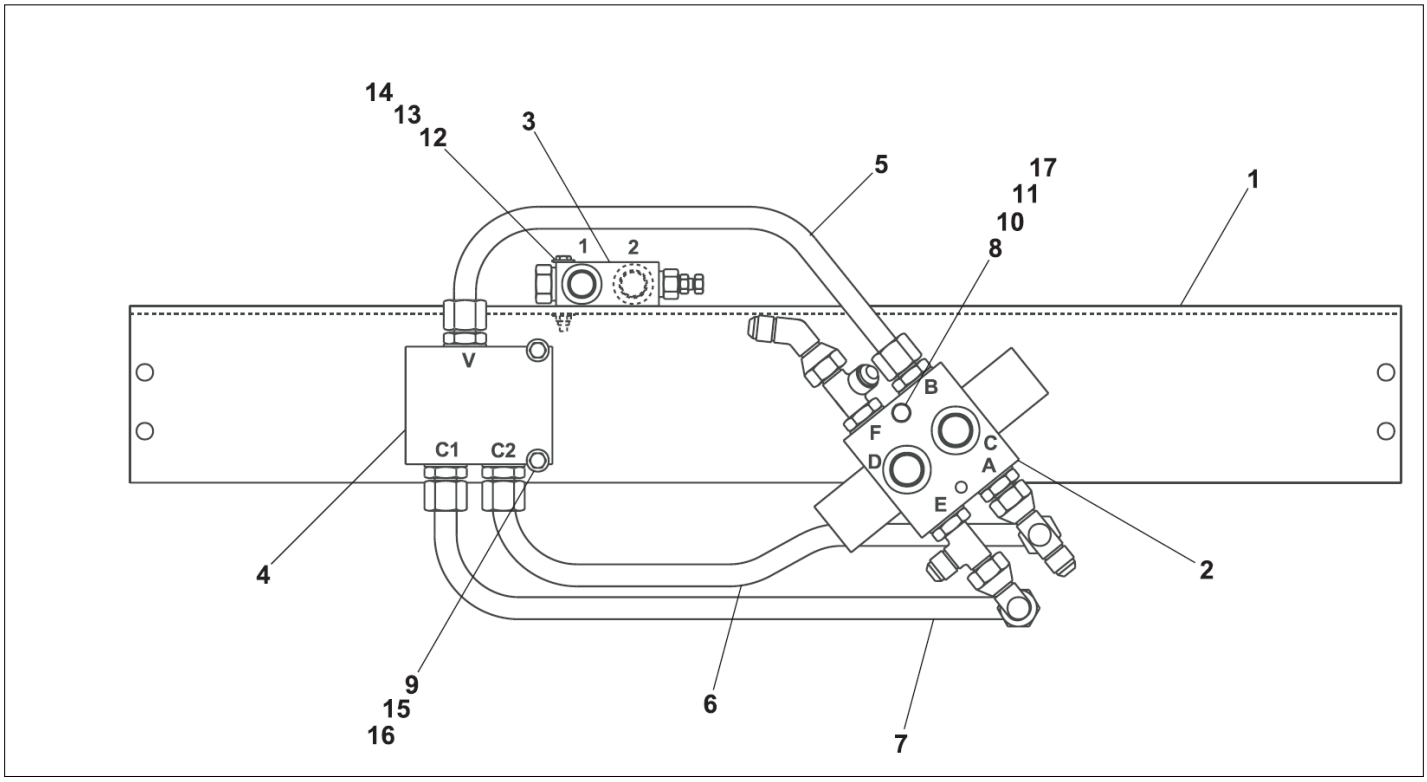

Courtesy of Crane.Market

Item	Part No.	Name	Qty	Uom
1	0080514	BRACKET, DRIVE VALVE	1	EA
2	0081425	SELECTOR VALVE, 2 WHEEL DRIVE	1	EA
Not Shown	0081598	SELECTOR VALVE, 4 WHEEL DRIVE	1	EA
3	0081181	ANTI-CAVITATION VALVE	1	EA
4	0081424	FLOW DIVIDER VALVE SUB-ASSY	1	EA
5	0080513	3/4 INCH HYDRAULIC TUBE	1	EA
6	0080512	3/4 INCH HYDRAULIC TUBE	1	EA
7	0080511	3/4 INCH HYDRAULIC TUBE	1	EA
8	970549	CAPSCREW 3/8-16 X 3 INCH LONG HEX HEAD GRADE 5	1	EA
9	5560031	NUT HEX LKG .313-18	2	EA
10	5560033	NUT HEXHD .375-16 LKG	1	EA
11	986299	BOLT HEXHD .313-18 2.50 GR. 5	1	EA
12	969999	CAP SCREW 1/4-20 X 2-1/4 INCH LONG HEX HEAD GRADE 5	2	EA
13	5560004	NUT HEXHD .250-20 LKG	2	EA
14	986019	WASHER FLAT .250	4	EA
15	970349	BLT HEXHD .313-18 2.75 GR5	2	EA
16	986269	WASHER 5/16 MEDIUM FLAT	4	EA
17	987119	BOLT HEXHD .375-16 1.75 GR. 5	2	EA

Courtesy of Crane.Market

HYDRAULICS

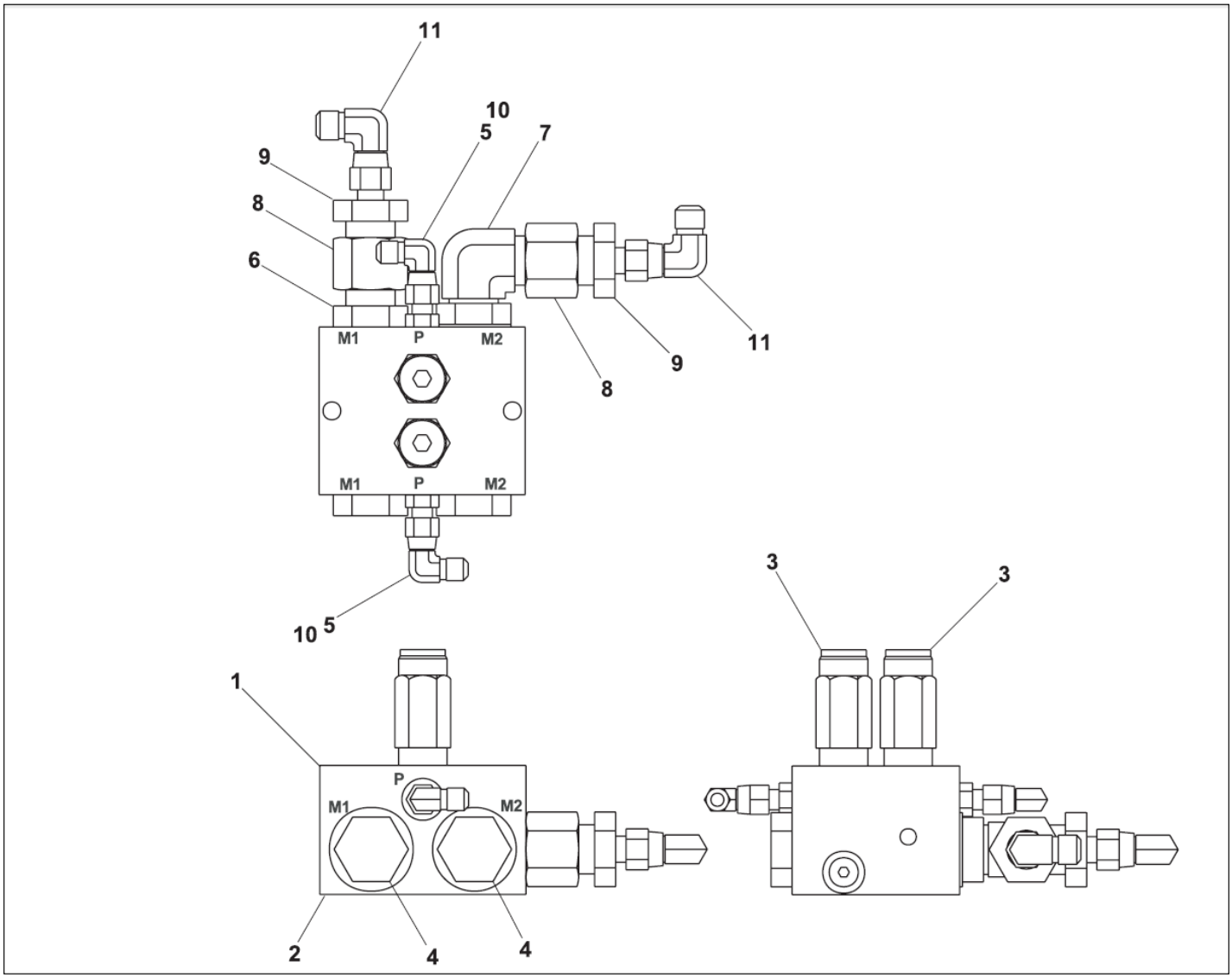

Courtesy of Crane.Market

Item	Part No.	Name	Qty	Uom
1	6010613	VALVE PACKAGE	1	EA
2	6010614	VALVE BODY, FLUIDTECH	1	EA
Not Shown	6010624	VALVE BODY, WECO	1	EA
3	6010615	CARTRIDGE SEQUENCE VALVE, FLUIDTECH	2	EA
Not Shown	6010269	SEQUENCE VALVE CARTRIDGE	2	EA
4	5075208	ADAPTER, PLUG, -12 SAE	2	EA
5	5065703	FTG ADAPTER STRTHD- 4B- 4S STL	2	EA
6	5065714	FTG ADPTR STRTHD-12B-12S STL-P	1	EA
7	5035308	FTG ELB90STRTHD-12B-12S STL	1	EA
8	5063908	FTG NUT-12S STL	2	EA
9	5064007	TUBE END REDUCER	2	EA
10	5037003	SWIVEL NUT 90° ELBOW	2	EA
11	5037005	FTG ELB90SWVL-6S-6S STL	2	EA

Courtesy of Crane.Market

HYDRAULICS

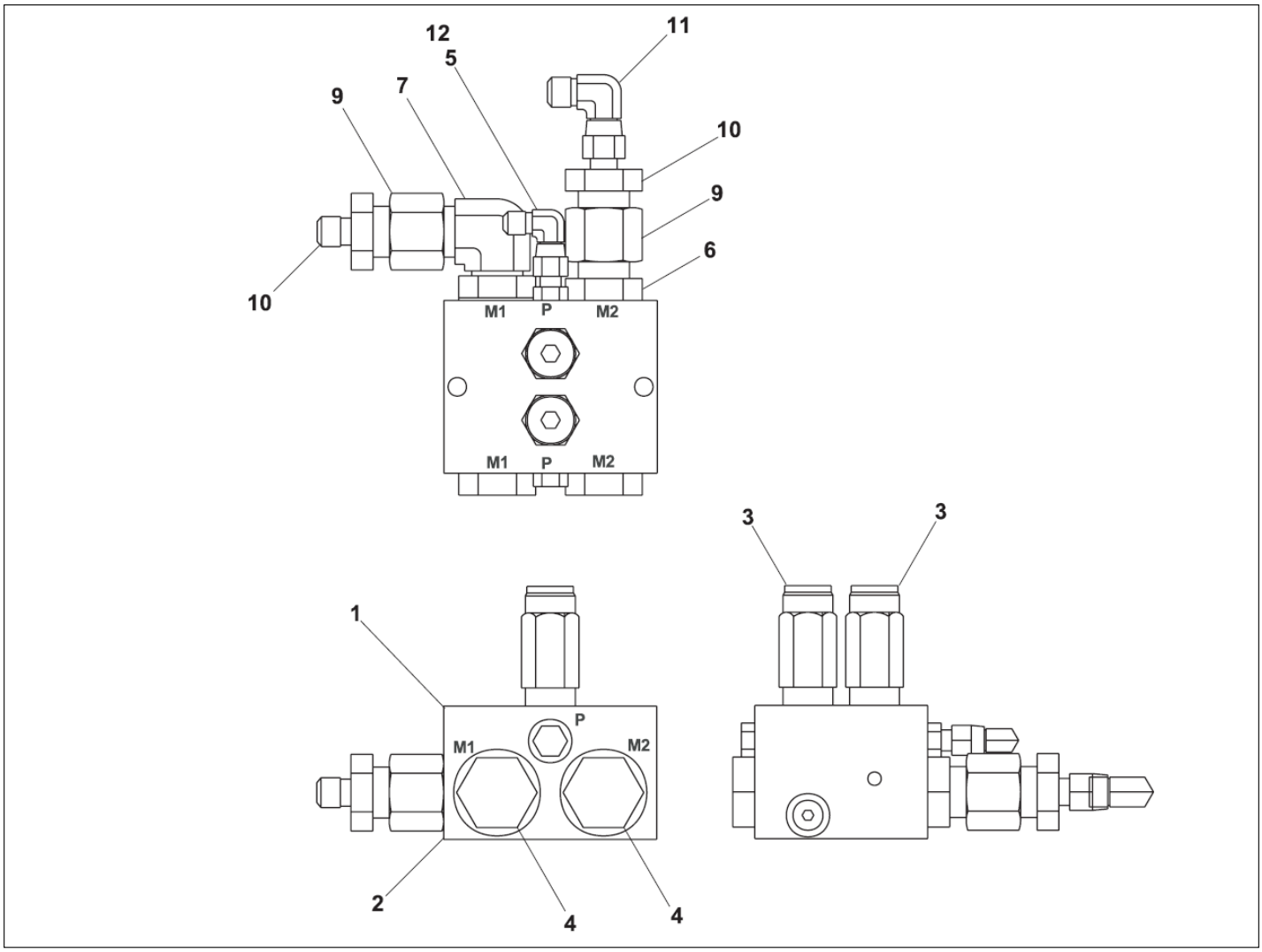

Courtesy of Crane.Market

Item	Part No.	Name	Qty	Uom
1	6010613	VALVE PACKAGE	1	EA
2	6010614	VALVE BODY, FLUIDTECH	1	EA
Not Shown	6010624	VALVE BODY, WECO	1	EA
3	6010615	CARTRIDGE SEQUENCE VALVE, FLUIDTECH	2	EA
Not Shown	6010269	SEQUENCE VALVE CARTRIDGE	2	EA
4	5075208	ADAPTER, PLUG, -12 SAE	2	EA
5	5065703	FTG ADAPTER STRTHD- 4B- 4S STL	1	EA
6	5065714	FTG ADPTR STRTHD-12B-12S STL-P	1	EA
7	5035308	FTG ELB90STRTHD-12B-12S STL	1	EA
8	5075203	HEX HEAD PLUG	1	EA
9	5063908	FTG NUT-12S STL	2	EA
10	5064007	TUBE END REDUCER	2	EA
11	5037005	FTG ELB90SWVL-6S-6S STL	1	EA
12	5037003	SWIVEL NUT 90° ELBOW	1	EA

Courtesy of Crane.Market

HYDRAULICS

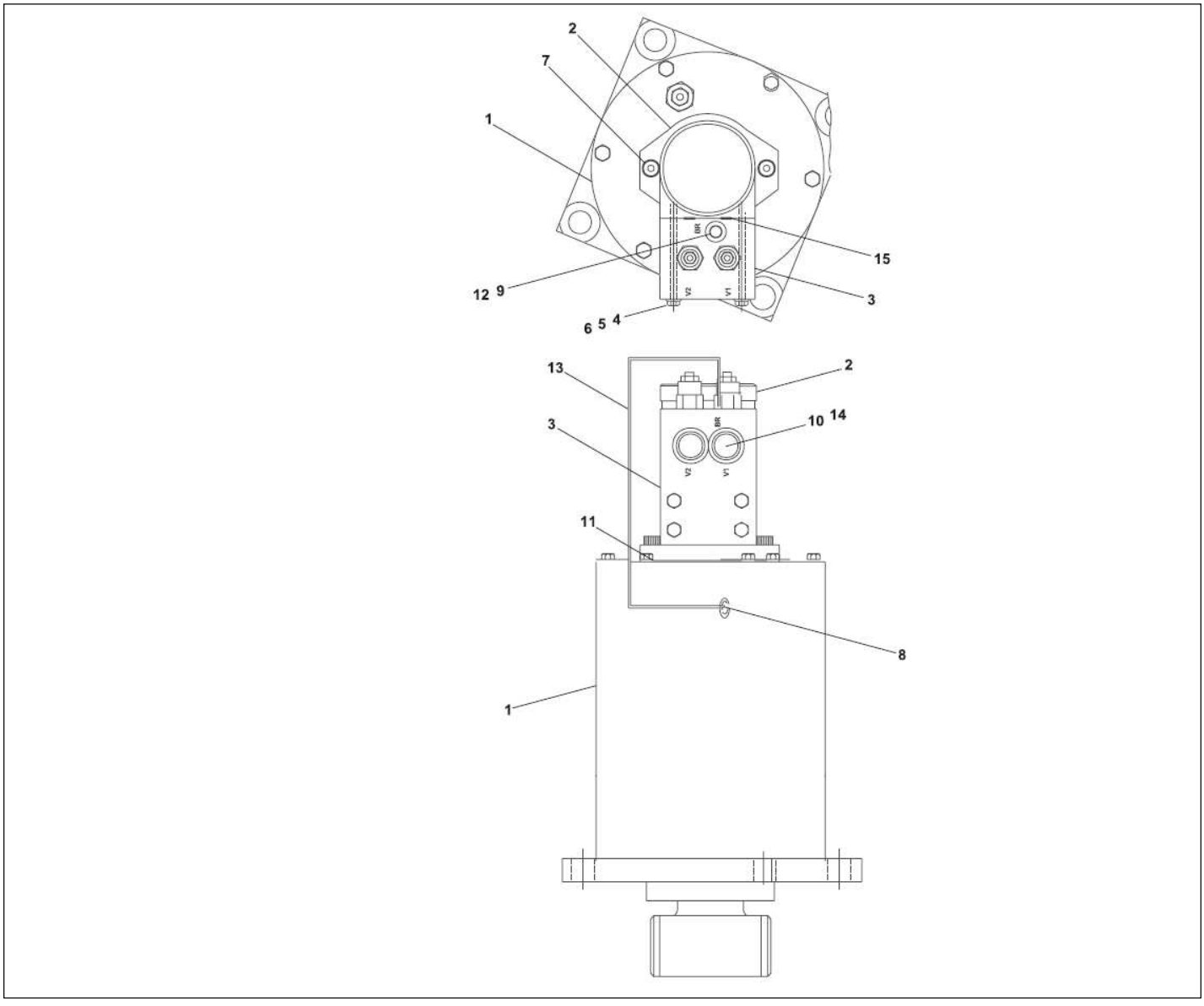

Courtesy of Crane.Market

Item	Part No.	Name	Qty	Uom
1	0070047	SWING DRIVE – TULSA WINCH	1	EA
Not Shown	0070047	SWING DRIVE – TULSA WINCH	1	EA
Not Shown	0070047	SWING DRIVE – TULSA WINCH	1	EA
2	6030020	SWING DRIVE MTR	1	EA
Not Shown	8200004	SEAL REPAIR KIT - ROSS/TRW MOTOR	1	EA
Not Shown	0090352	SEAL REPAIR KIT - CHARLYNN/EATON MOTOR	1	EA
Not Shown	0073359	SEAL REPAIR KIT - WHITE/ROLLER STATOR MOTOR	1	EA
3	6010250	MOTION CONTROL VALVE, TURNTABLE SWING	1	EA
Not Shown	6019048	VALVUE, MOTION CONTROL-SWING	1	EA
4	5560641	BOLT HEXHD .313-18 3.50 GR. 5	4	EA
5	986269	WASHER 5/16 MEDIUM FLAT	4	EA
6	987109	WASHER LOCK .313	4	EA
7	5560087	CAPSCREW SPECIAL SELF LOCKING	2	EA
8	5035303	FTG ELB90STRTHD-4B-4S STL	1	EA
9	5065703	FTG ADAPTER STRTHD- 4B- 4S STL	1	EA
10	5065726	FTG ADAPTER STRTHD- 10B-6S STL	1	EA
11	7190005	GASKET, SWING DRIVE MOTOR	1	EA
12	5037003	SWIVEL NUT 90° ELBOW	1	EA
13	0020283	HOSE -4-4S-4S 15.25 100R2	1	EA
14	5036905	FTG ELB45SWVL-6S-6S STL	2	EA
15	7110112	O-RING	2	EA

Courtesy of Crane.Market

HYDRAULICS

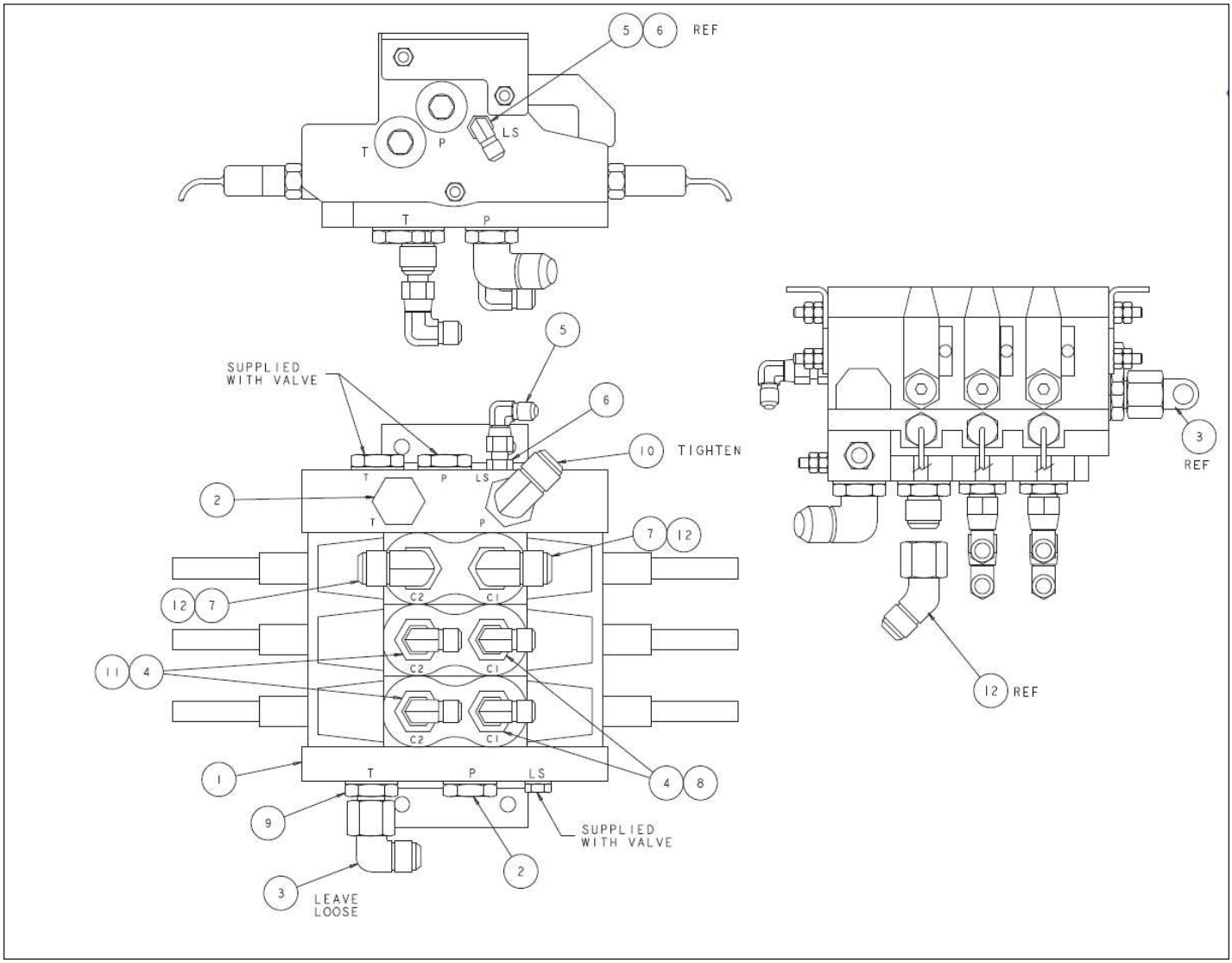

Courtesy of Crane.Market

Item	Part No.	Name	Qty	Uom
1	6010823	VALVE, PROPORTIONAL	1	EA
2	5075208	ADAPTER, PLUG, -12 SAE	2	EA
3	5037010	FTG ELB90SWVL-16S-16S STL	1	EA
4	5037005	FTG ELB90SWVL-6S-6S STL	4	EA
5	5037003	SWIVEL NUT 90° ELBOW	1	EA
6	5065703	FTG ADAPTER STRTHD- 4B- 4S STL	1	EA
7	5065731	FTG ADPTR STRTHD-8B-12S STL	2	EA
8	5065708	FTG ADAPTER STRTHD -8B	2	EA
9	5065719	FTG ADAPTER STRTHD -12B-16S STL	1	EA
10	5035311	FTG ELB90STRTHD-16B-16S STL	1	EA
11	5065815	FTG ADAPTER STRTHD L-8B-6S STL	2	EA
12	5036908	FTG ELB45SWVL-12S-12S STL	2	EA

Courtesy of Crane.Market

HYDRAULICS

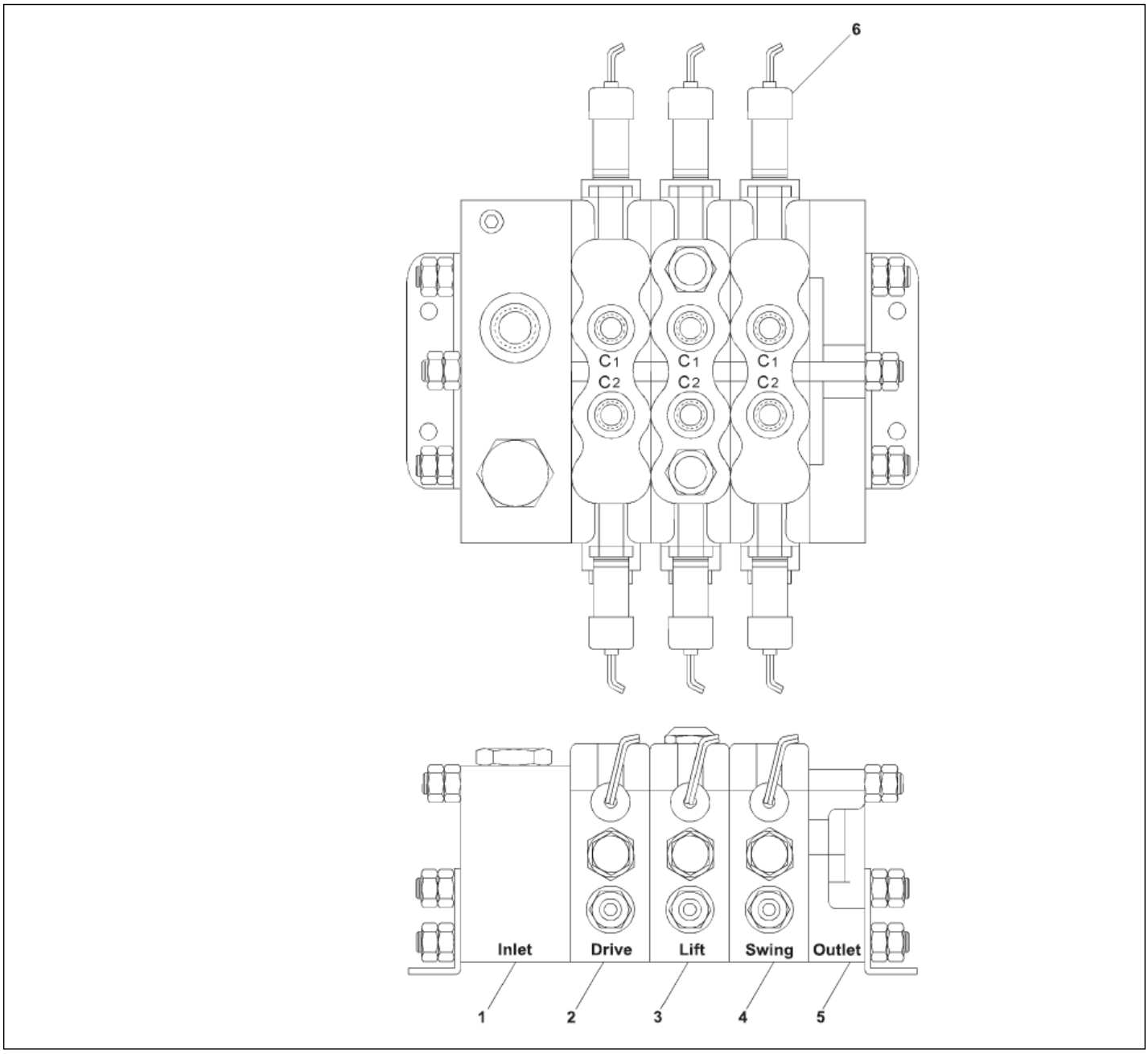

Courtesy of Crane.Market

Item	Part No.	Name	Qty	Uom
Not Shown	6010823	VALVE, PROPORTIONAL	1	EA
1	6010849	INLET SECTION	1	EA
Not Shown	8010272	SET SCREW	2	EA
Not Shown	8010273	NUT/WASHER	2	EA
2	6010850	DRIVE CONTROL SECTION	1	EA
Not Shown	8010272	SET SCREW	2	EA
Not Shown	8010273	NUT/WASHER	2	EA
3	6010851	BOOM LIFT CONTROL VALVE SECTION	1	EA
Not Shown	8010272	SET SCREW	2	EA
Not Shown	8010273	NUT/WASHER	2	EA
4	6010852	SWING CONTROL VALVE SECTION	1	EA
Not Shown	8010272	SET SCREW	2	EA
Not Shown	8010273	NUT/WASHER	2	EA
5	6010853	OUTLET SECTION	1	EA
Not Shown	8010272	SET SCREW	2	EA
Not Shown	8010273	NUT/WASHER	2	EA
6	6010653	SOLENOID CARTRIDGE, 12 VOLT DC - (BLACK - 33 HZ) (INCLUDES CARTRIDGE, O-RING AND ORIFICE DISC - MUST BE INSTALLED AS COMPLETE UNIT)	6	EA
7	8010245	O-RING SEAL KIT FOR VALVE SECTION	AR	EA

Courtesy of Crane.Market

HYDRAULICS

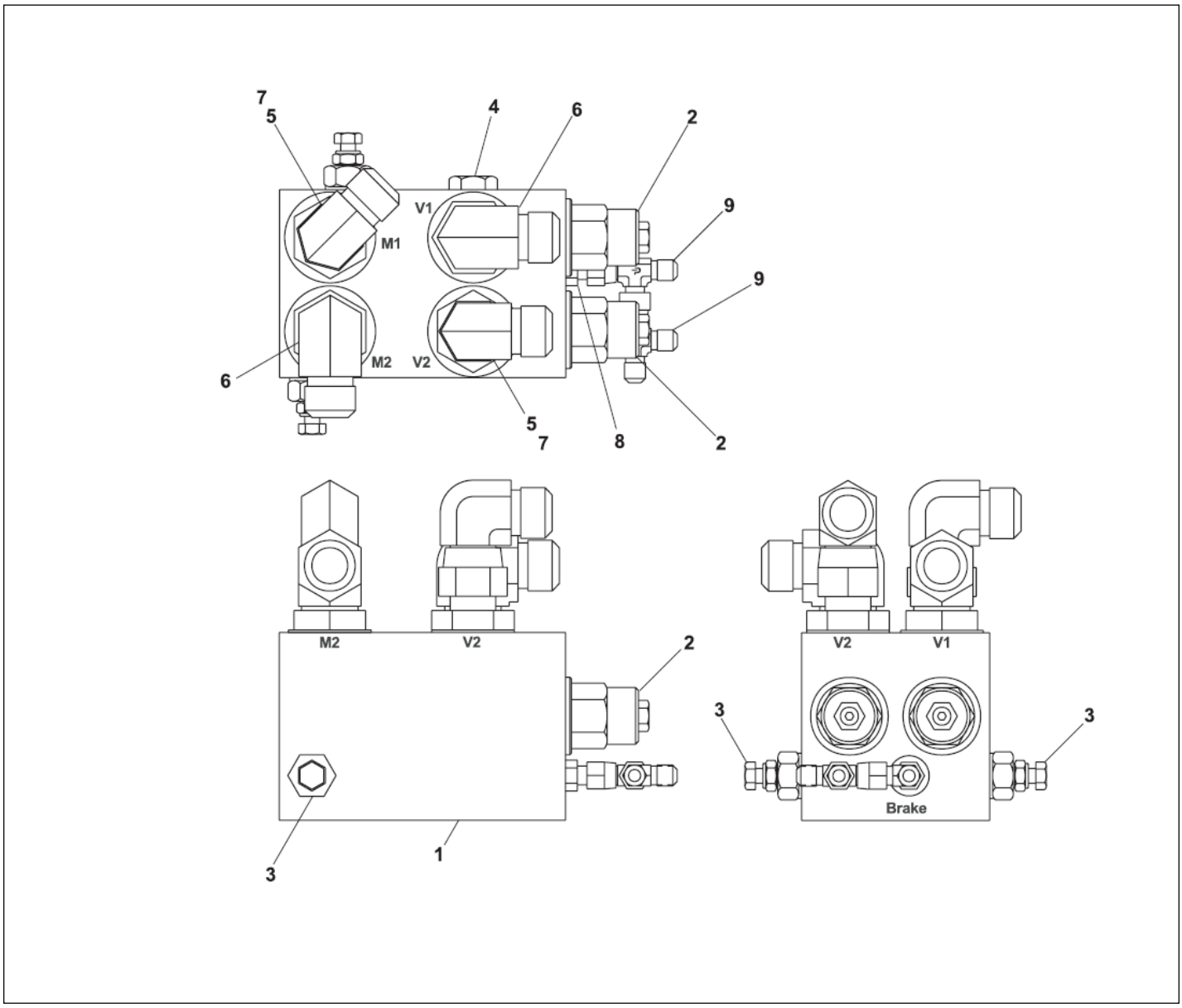

Courtesy of Crane.Market

Item	Part No.	Name	Qty	Uom
1	6010228	MOTION CONTROL VALVE, DRIVE	1	EA
Not Shown	0110683	SEAL REPAIR KIT	1	EA
2	6010523	COUNTERBALANCE VALVE CARTRIDGE	2	EA
3	6010269	SEQUENCE VALVE CARTRIDGE	2	EA
4	6010531	SHUTTLE VALVE	1	EA
5	5065715	FTG ADPTR STRTHD-16B-12S STL-B	2	EA
6	5035319	ADAPTER 90 DEG ELBOW -16 SAT TO -12 JIC	2	EA
7	5037008	FTG ELB90SWVL-12S-12S STL	2	EA
8	5065703	FTG ADAPTER STRTHD- 4B- 4S STL	1	EA
9	5036703	SWIVEL NUT RUN TEE	2	EA

Courtesy of Crane.Market

HYDRAULICS

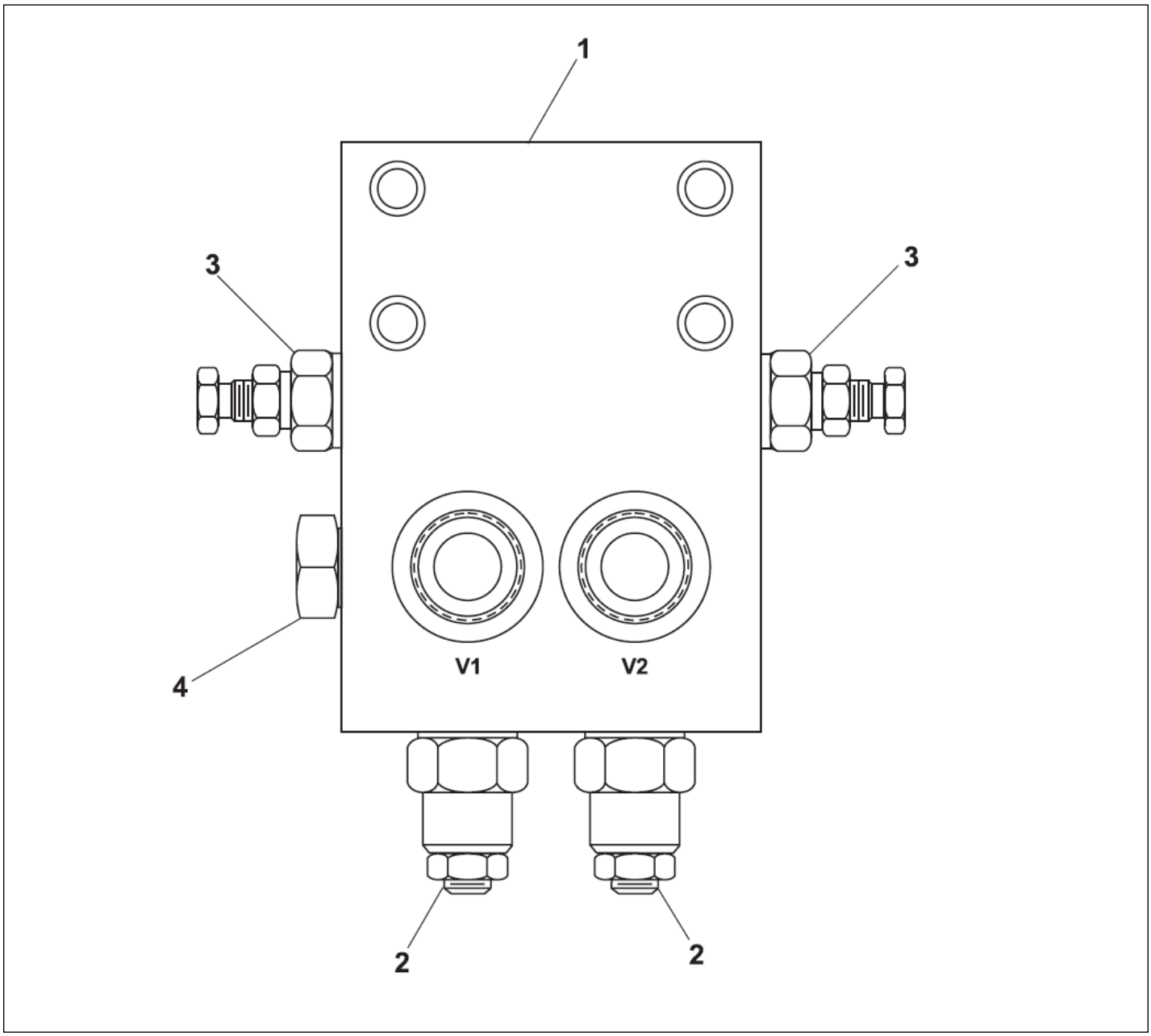

Courtesy of Crane.Market

Item	Part No.	Name	Qty	Uom
1	6010250	MOTION CONTROL VALVE, TURNTABLE SWING	1	EA
2	6010256	COUNTERBALANCE CARTRIDGE - (FACTOR PRESET, DO NOT RESET)	2	EA
3	6010321	CARTRIDGE RELIEF VALVE	2	EA
Not Shown	0150563	SEAL REPAIR KIT	1	EA
4	6010531	SHUTTLE VALVE	1	EA

Courtesy of Crane.Market

HYDRAULICS

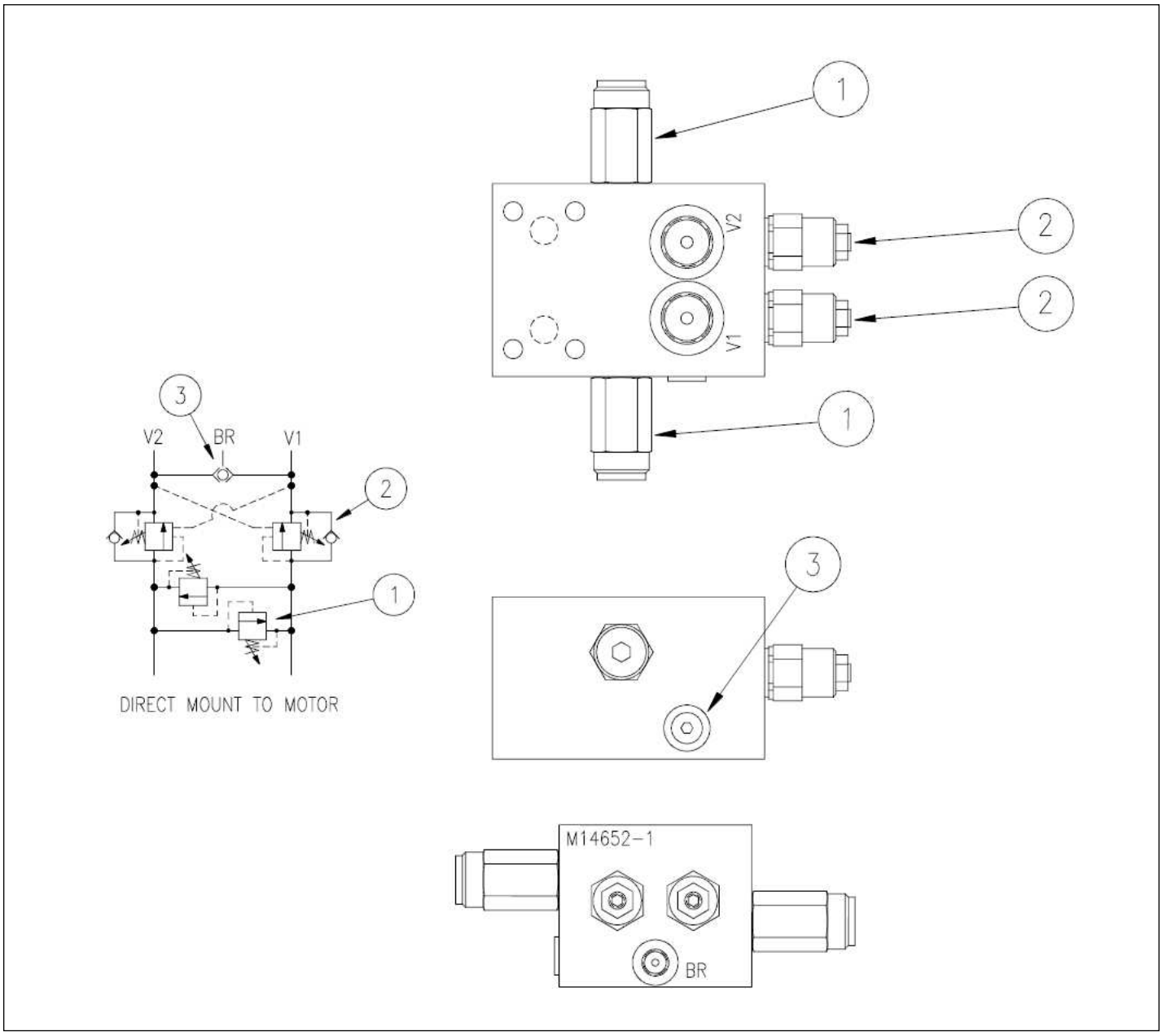

Courtesy of Crane.Market

Item	Part No.	Name	Qty	Uom
Not Shown	6019048	VALVUE, MOTION CONTROL-SWING	1	EA
1	514411-000	RELIEF VALVE	2	EA
2	6019341	COUNTERBALANCE VALVE	2	EA
Not Shown	6091702	SEAL KIT	1	EA
3	6019041	SHUTTLE VALVE	1	EA
Not Shown	6091701	SEAL KIT	1	EA

Courtesy of Crane.Market

HYDRAULICS

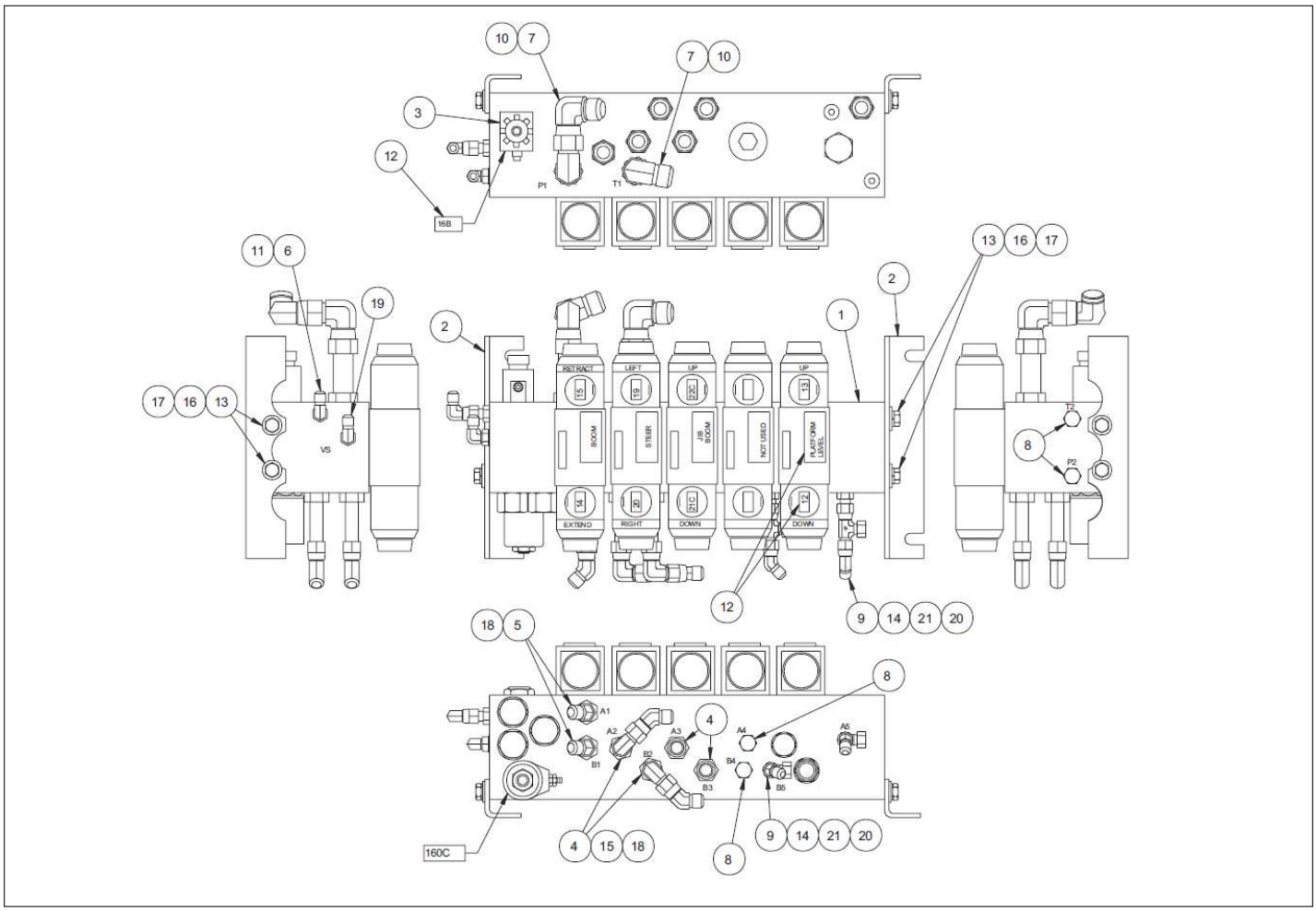

Courtesy of Crane.Market

Item	Part No.	Name	Qty	Uom
1	6010577	CONTROL VALVE, NON-PROPORTIONAL	1	EA
2	0181449	ANGLE	2	EA
3	6010591	SOLENOID VALVE AND COIL ASSEMBLY	1	EA
Not Shown	0180802	SEAL REPAIR KIT	1	EA
Not Shown	6010392	REPLACEMENT CARTRIDGE	1	EA
Not Shown	3040496	RELAY SPDT 12V 30 AMP	1	EA
4	5065805	FTG ADAPTER STRTHD -LG-6B-6S	4	EA
5	5065815	FTG ADAPTER STRTHD L-8B-6S STL	2	EA
6	5065703	FTG ADAPTER STRTHD- 4B- 4S STL	1	EA
7	5065807	FTG ADPTR STRTHD LG-10B-10S STL	2	EA
8	5075205	FTG PL HEX HD-8B STL	4	EA
9	5036703	SWIVEL NUT RUN TEE	2	EA
10	5037007	SWIVEL NUT 90° ELBOW	3	EA
11	5037003	SWIVEL NUT 90° ELBOW	1	EA
12	0082010	DECAL SET	1	EA
13	987109	WASHER LOCK .313	4	EA
14	5065705	FTG, ADAPTER STRTHD -6B-4S STL	2	EA
15	5037005	FTG ELB90SWVL-6S-6S STL	2	EA
16	970239	BOLT HEXHD .313-18 .75 GR. 5	4	EA
17	986269	WASHER 5/16 MEDIUM FLAT	4	EA
18	5036905	FTG ELB45SWVL-6S-6S STL	4	EA
19	5035303	FTG ELB90STRTHD-4B-4S STL	1	EA
20	5036903	SWIVEL NUT 45° ELBOW	2	EA
21	5063701	CAP	2	EA

Courtesy of Crane.Market

HYDRAULICS

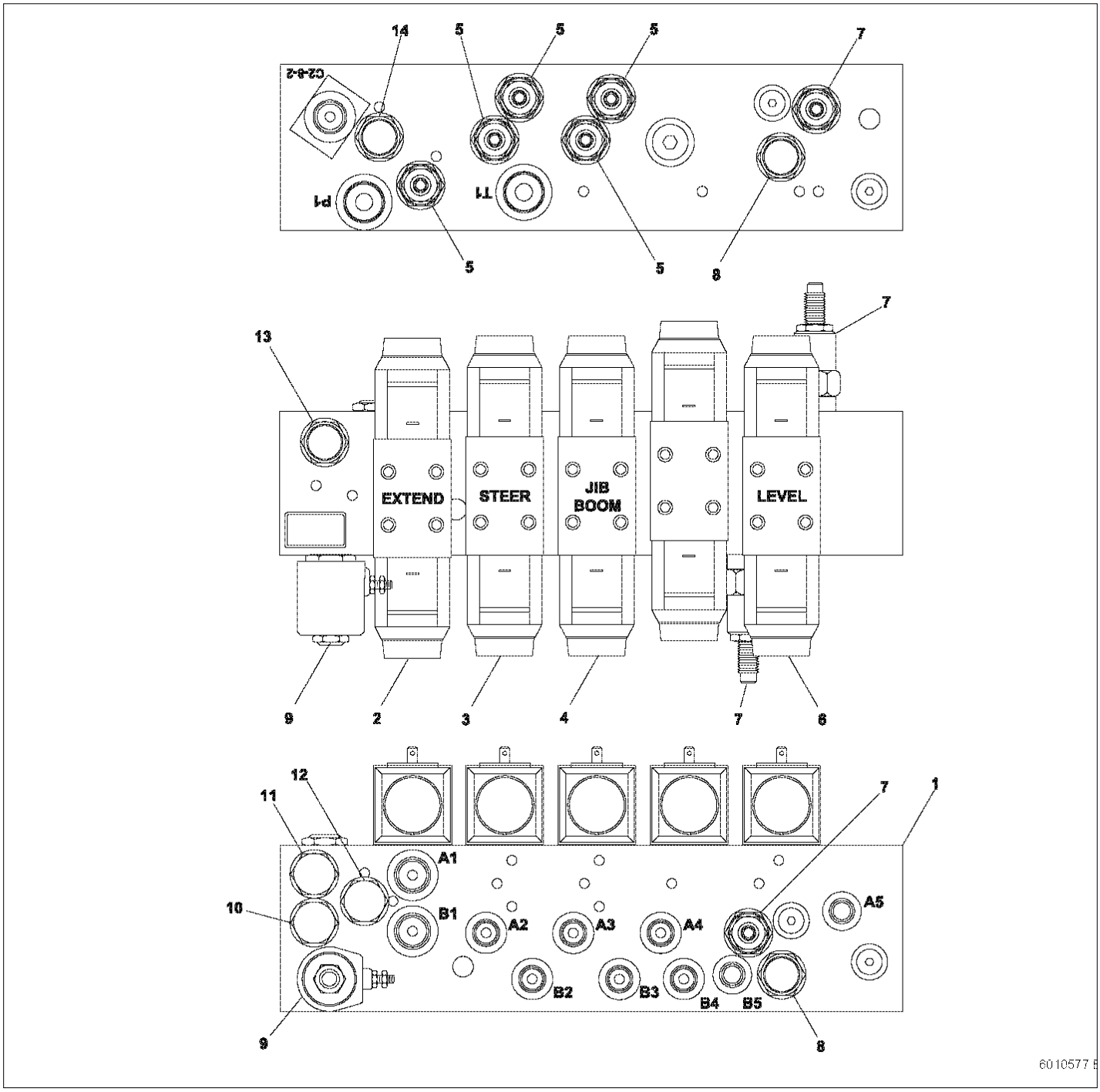

Courtesy of Crane.Market

Item	Part No.	Name	Qty	Uom
Not Shown	6010577	CONTROL VALVE, NON-PROPORTIONAL	1	EA
1	6010694	MANIFOLD BODY	1	EA
2	6010697	STEER CONTROL VALVE	1	EA
Not Shown	3040551	REPLACEMENT SOLENOID, 12 VOLT DC	2	EA
3	6010697	STEER CONTROL VALVE	1	EA
Not Shown	3040551	REPLACEMENT SOLENOID, 12 VOLT DC	2	EA
4	6010697	STEER CONTROL VALVE	1	EA
Not Shown	3040551	REPLACEMENT SOLENOID, 12 VOLT DC	2	EA
5	6010706	RELIEF VALVE CARTRIDGE	5	EA
Not Shown	565666	SEAL REPAIR KIT	1	EA
6	6010696	LEVEL CONTROL VALVE	1	EA
Not Shown	3040551	REPLACEMENT SOLENOID, 12 VOLT DC	2	EA
7	6010700	PRESSURE RELIEF CARTRIDGE VALVE	2	EA
Not Shown	6010553	SEAL REPAIR KIT	1	EA
8	6010699	CHECK VALVE CARTRIDGE	2	EA
9	6010698	3-WAY INLET CARTRIDGE VALVE	1	EA
Not Shown	6010537	SEAL REPAIR KIT	1	EA
Not Shown	6010707	REPLACEMENT CARTRIDGE	1	EA
Not Shown	8220094	REPLACEMENT SOLENOID, 12 VOLT DC	1	EA
10	6010703	FLOW REGULATOR CARTRIDGE VALVE	1	EA
Not Shown	565666	SEAL REPAIR KIT	1	EA

Courtesy of Crane.Market

Item	Part No.	Name	Qty	Uom
11	6010702	FLOW CONTROL CARTRIDGE VALVE	1	EA
Not Shown	565666	SEAL REPAIR KIT	1	EA
12	6010701	3-WAY PILOT OPERATED CARTRIDGE ATMOSPHERE VENTED	1	EA
Not Shown	6010551	SEAL REPAIR KIT	1	EA
13	6010704	SHUTTLE VALVE CARTRIDGE	1	EA
Not Shown	6010537	SEAL REPAIR KIT	1	EA
14	6010705	CHECK VALVE CARTRIDGE	1	EA
Not Shown	565666	SEAL REPAIR KIT	1	EA

Courtesy of Crane.Market

HYDRAULICS

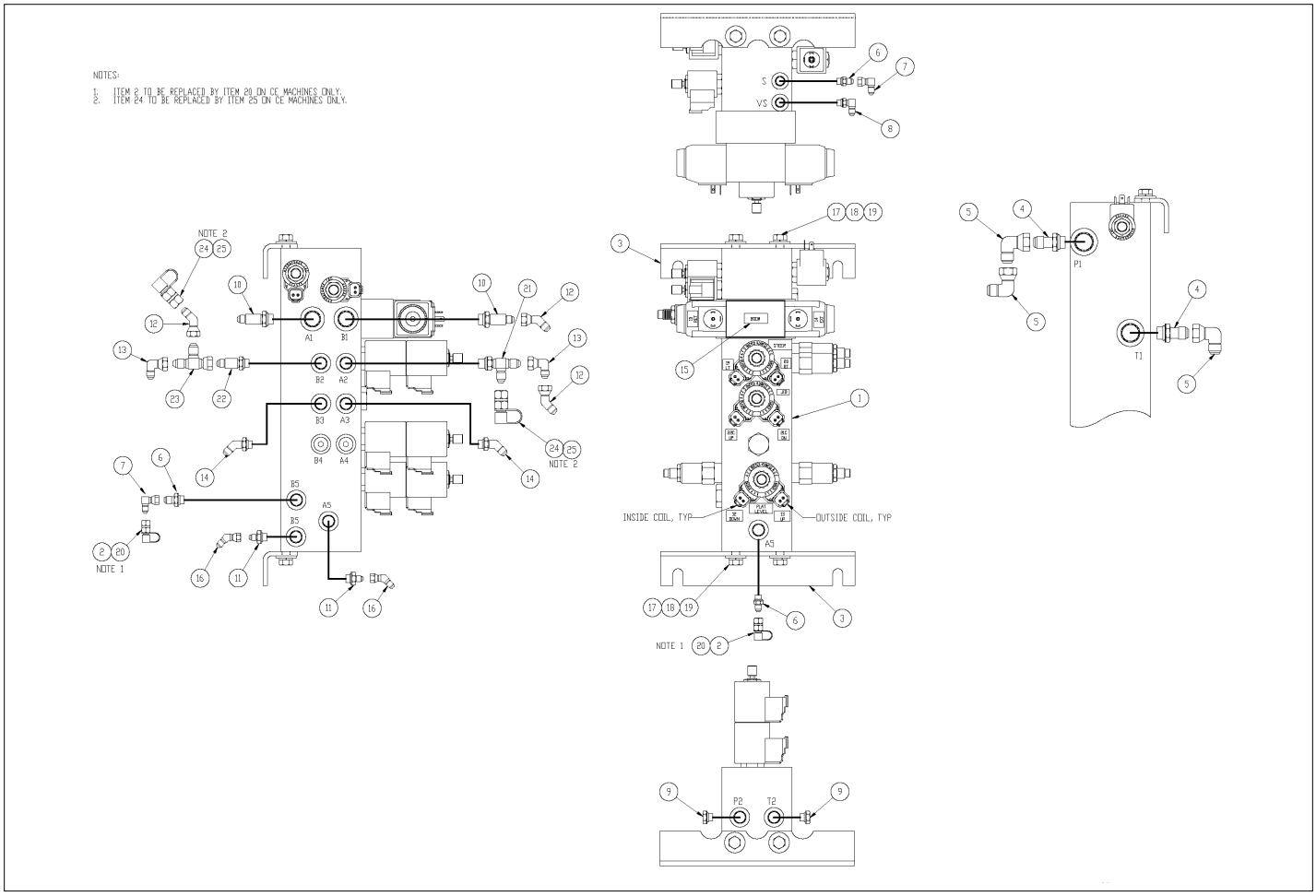

Courtesy of Crane.Market

Item	Part No.	Name	Qty	Uom
1	6019139	NON-PROP CONT VALVE TB66J	1	EA
2	5070005	NIPPLE-DIAGNOSTIC -4 JIC FEM	2	EA
3	0181449	ANGLE	2	EA
4	5065807	FTG ADPTR STRTHD LG-10B-10S STL	2	EA
5	5037007	SWIVEL NUT 90° ELBOW	3	EA
6	5065703	FTG ADAPTER STRTHD- 4B- 4S STL	3	EA
7	5037003	SWIVEL NUT 90° ELBOW	2	EA
8	5035303	FTG ELB90STRTHD-4B-4S STL	1	EA
9	5075205	FTG PL HEX HD-8B STL	2	EA
10	5065815	FTG ADAPTER STRTHD L-8B-6S STL	2	EA
11	5065705	FTG, ADAPTER STRTHD -6B-4S STL	2	EA
12	5036905	FTG ELB45SWVL-6S-6S STL	2	EA
13	5037005	FTG ELB90SWVL-6S-6S STL	1	EA
14	5035705	FTG ELB45STRTHD-6B-6S STL	2	EA
15	0082010	DECAL SET	1	EA
16	5036903	SWIVEL NUT 45° ELBOW	2	EA
17	970239	BOLT HEXHD .313-18 .75 GR. 5	4	EA
18	986269	WASHER 5/16 MEDIUM FLAT	4	EA
19	987109	WASHER LOCK .313	4	EA
20	5070028	FTG NIP-4 JICFEM-METRIC DESIGN CE	REF	EA
21	5036105	FTG TEE STRTHD RUN-6B-6S STL	1	EA
22	5065707	STRAIGHT THREAD ADAPTER - (CENTERPOST PORTS NO 5 AND NO 6) (FITTINGS NOT SHOWN, PORTS MARKED ON PARTS)	1	EA

Courtesy of Crane.Market

Item	Part No.	Name	Qty	Uom
23	5036705	FTG TEE SWIVEL RUN-6S-6S STL	1	EA
24	5070010	DIAGNOSTIC NIPPLE - (USED ON STANDARD MACHINES)	2	EA
25	5070027	FTG NIP DIGN-6S FEM METRIC – CE MACHINES ONLY	REF	EA

Courtesy of Crane.Market

HYDRAULICS

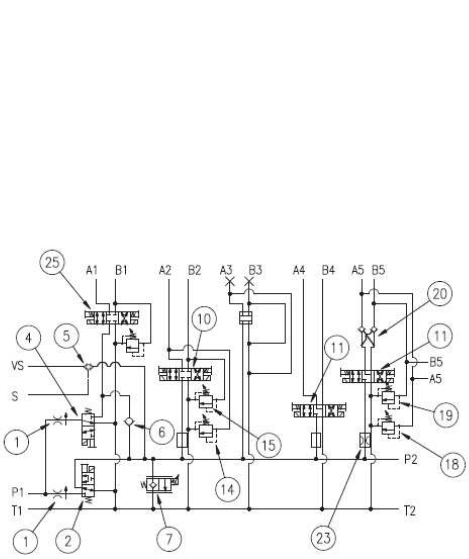

HYDRAULIC SCHEMATIC

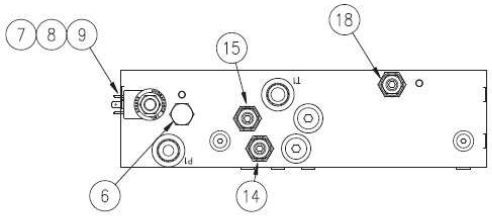

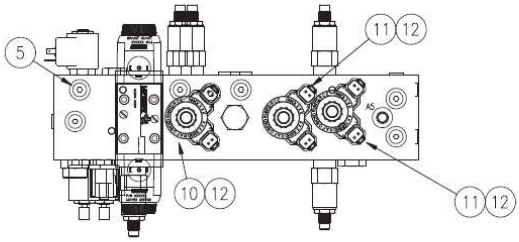

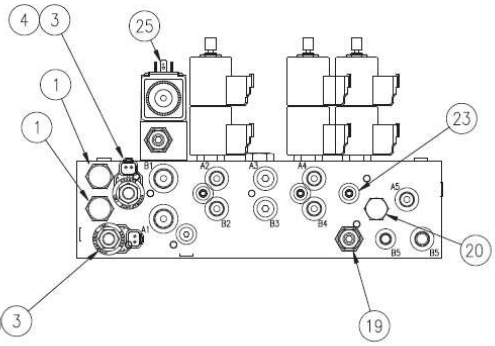

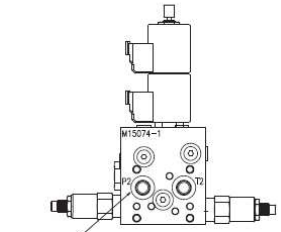

P2 AND T2 PORTS COUNTERBORED SO PLUGS (IF INSTALLED) ARE BELOW SURFACE

SPECIFICATIONS:

MAXIMUM PRESSURE:	3000 PSI
NOMINAL FLOW:	7 GPM
PORT SIZES: (S, VS)	-4 SAE O-RING
(ALL OTHERS)	-6 SAE O-RING
(A1, B1)	-8 SAE O-RING
(P1, T1)	-10 SAE O-RING

MOUNTING HOLES: (6) 5/16-18 TAPPED X .44 DEEP

Courtesy of Crane.Market

Item	Part No.	Name	Qty	Uom
Not Shown	6019059	NON-PROP CONT VALVE TB60	1	EA
1	6019189	3.5 FLOW REGULATOR	2	EA
2	6019190	3-WAY SOL VALVE	1	EA
3	3220126	10 VDC DRZ COIL	2	EA
4	6019192	3 WAY SOL VALVE	1	EA
5	6019041	SHUTTLE VALVE	1	EA
6	561176	VALVE CART CHECK CV08-20-0-N-04	1	EA
7	6019194	ELECTRO-PROPORTIONAL VALVE	1	EA
8	6019195	12 VDC DIN COIL	1	EA
9	6019196	DIN CONNECTOR	1	EA
10	6019098	VALVE SOL CART 3-POS 4WAY CC	1	EA
11	6019099	4-WAY SOL VALVE	2	EA
12	3040782	COIL 10V DIODE DEUTSCH CONN	6	EA
14	6019155	RELIEF VALVE	1	EA
15	6019155	RELIEF VALVE	1	EA
18	6019205	REL VLV - B5	1	EA
19	6019205	REL VLV - B5	1	EA
20	6019157	DOUBLE PO CHECK	1	EA
23	6018948	ORIFICE .035	1	EA
25	6019210	NONREGEN D03 SOL VALVE	1	EA

Courtesy of Crane.Market

HYDRAULICS

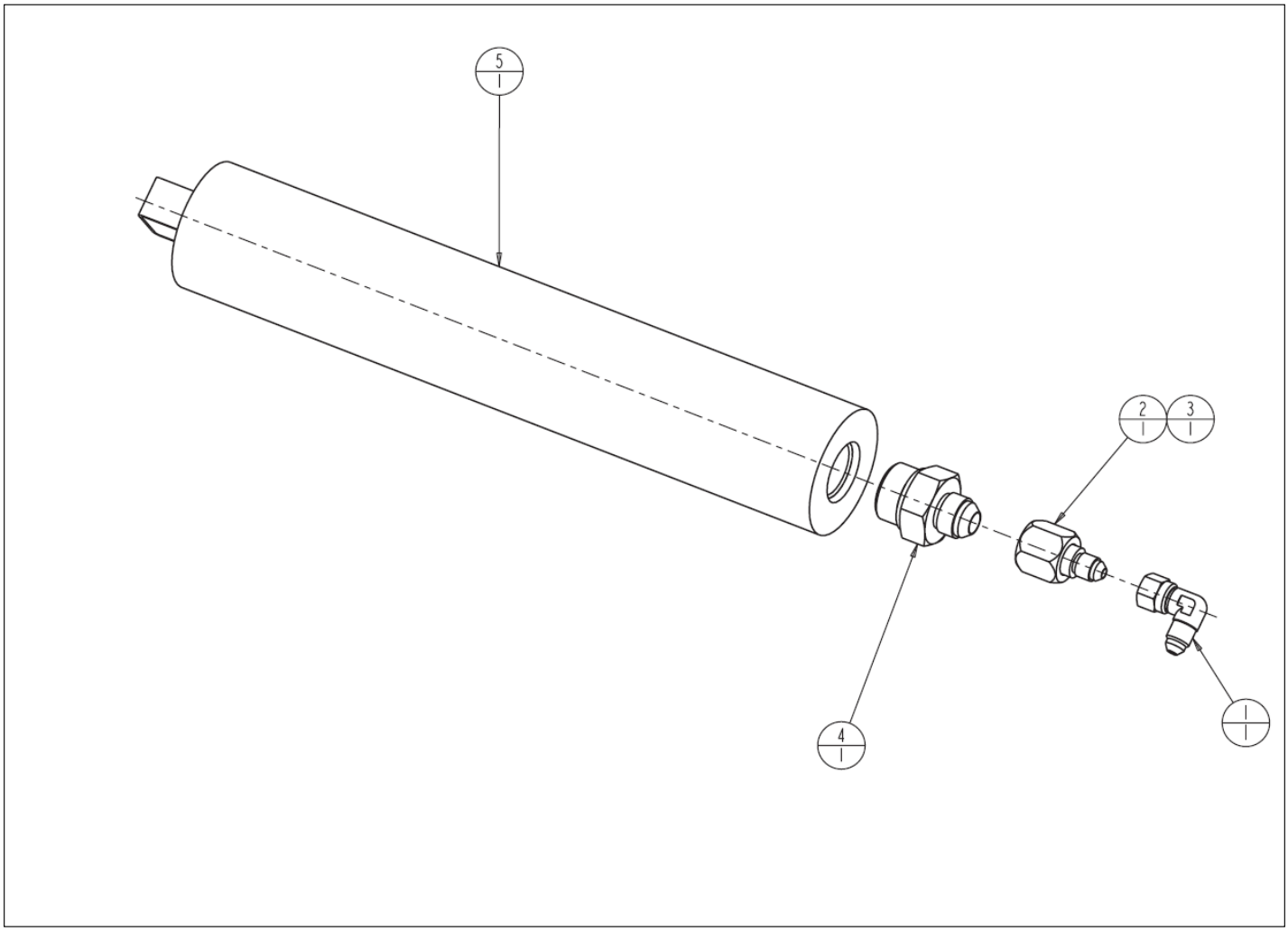

Courtesy of Crane.Market

Item	Part No.	Name	Qty	Uom
1	5037003	SWIVEL NUT 90° ELBOW	1	EA
2	5063906	FTG NUT-8 STL	1	EA
3	5064002	FTG RDCR-8S-4S W/O NUT STL	1	EA
4	5065711	FTG ADPTR STRTHD-12B-8S STL	1	EA
5	6070005	ACCUMULATOR – (SHIPPED UNCHARGED – CHARGE TO 300 PSI WITH DRY NITROGEN BEFORE USE)	1	EA

Courtesy of Crane.Market

HYDRAULICS

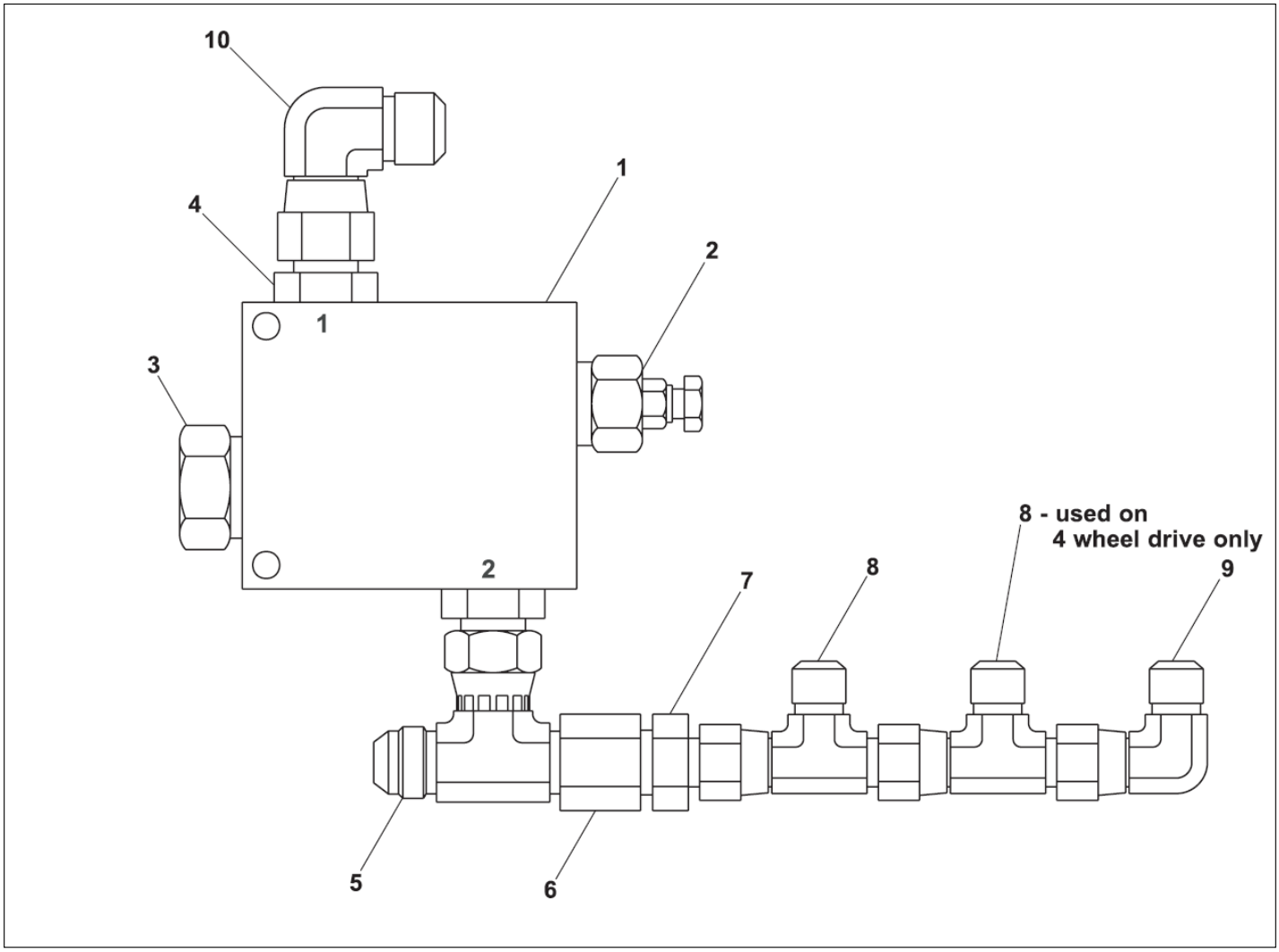

Courtesy of Crane.Market

Item	Part No.	Name	Qty	Uom
1	6010229	ANTI-CAVITATION VALVE – INCLUDES ITEMS 2 AND 3	1	EA
Not Shown	0110683	SEAL REPAIR KIT	1	EA
2	8230099	RELIEF VALVE CARTRIDGE – FACTORY PRESET, DO NOT RESET	1	EA
3	6010563	CHECK VALVE CARTRIDGE	1	EA
Not Shown	8190291	SEAL REPAIR KIT	1	EA
4	5065710	FTG ADPTR STRTHD-10B-8S STL	2	EA
5	5036806	SWIVEL NUT BRANCH TEE	1	EA
6	5063906	FTG NUT-8 STL	1	EA
7	5064003	FTG REDUCER TUBE END-8S-6S STL	1	EA
8	5036705	FTG TEE SWIVEL RUN-6S-6S STL	2	EA
9	5037005	FTG ELB90SWVL-6S-6S STL	1	EA
10	5037006	FTG ELB90SWVL-8S-8S STL	1	EA

Courtesy of Crane.Market

HYDRAULICS

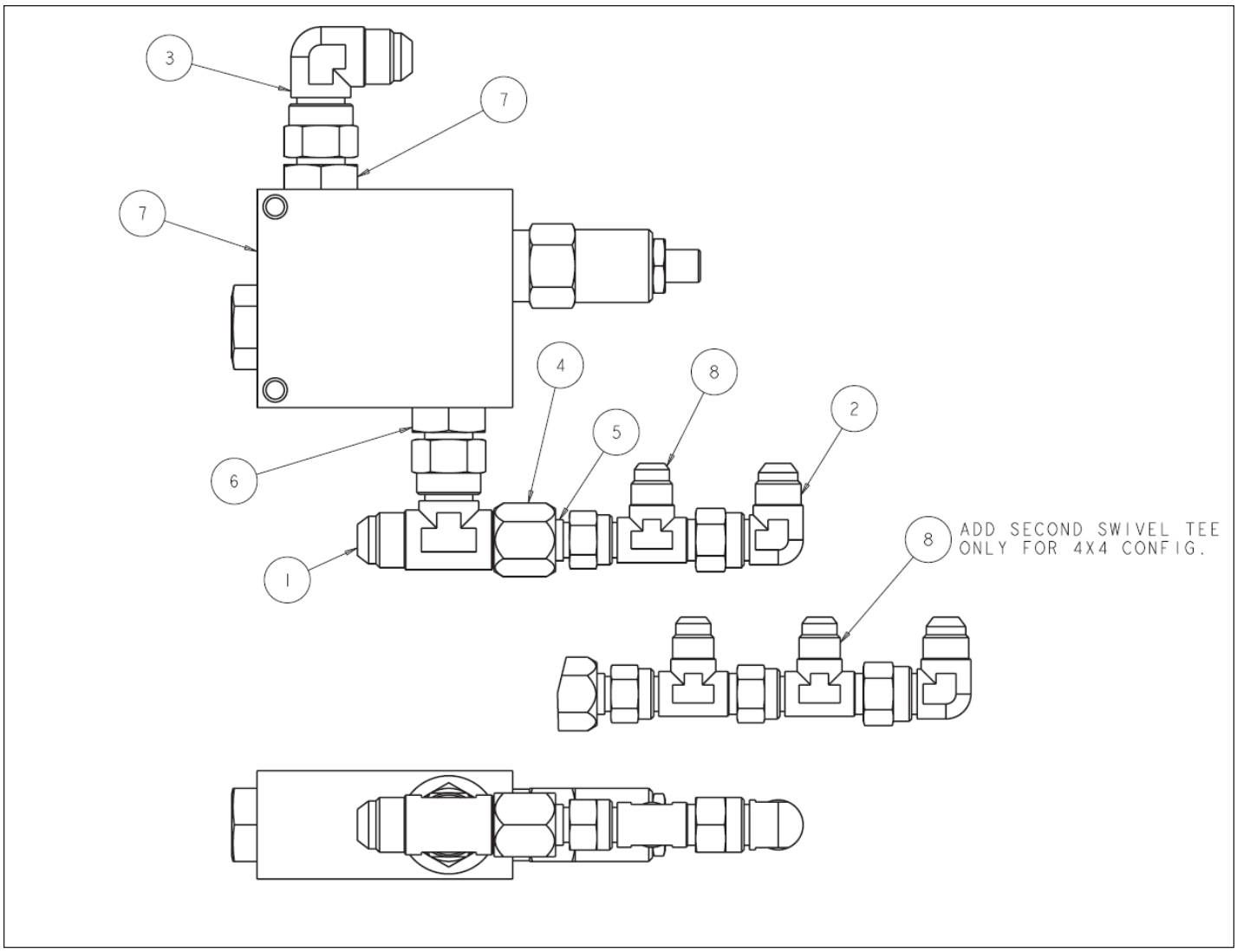

Courtesy of Crane.Market

Item	Part No.	Name	Qty	Uom
1	5036806	SWIVEL NUT BRANCH TEE	1	EA
2	5037005	FTG ELB90SWVL-6S-6S STL	1	EA
3	5037006	FTG ELB90SWVL-8S-8S STL	1	EA
4	5063906	FTG NUT-8 STL	1	EA
5	5064003	FTG REDUCER TUBE END-8S-6S STL	1	EA
6	5065710	FTG ADPTR STRTHD-10B-8S STL	2	EA
7	6019054	COUNTERBALANCE VALVE	1	EA
8	5036705	FTG TEE SWIVEL RUN-6S-6S STL	2	EA

Courtesy of Crane.Market

HYDRAULICS

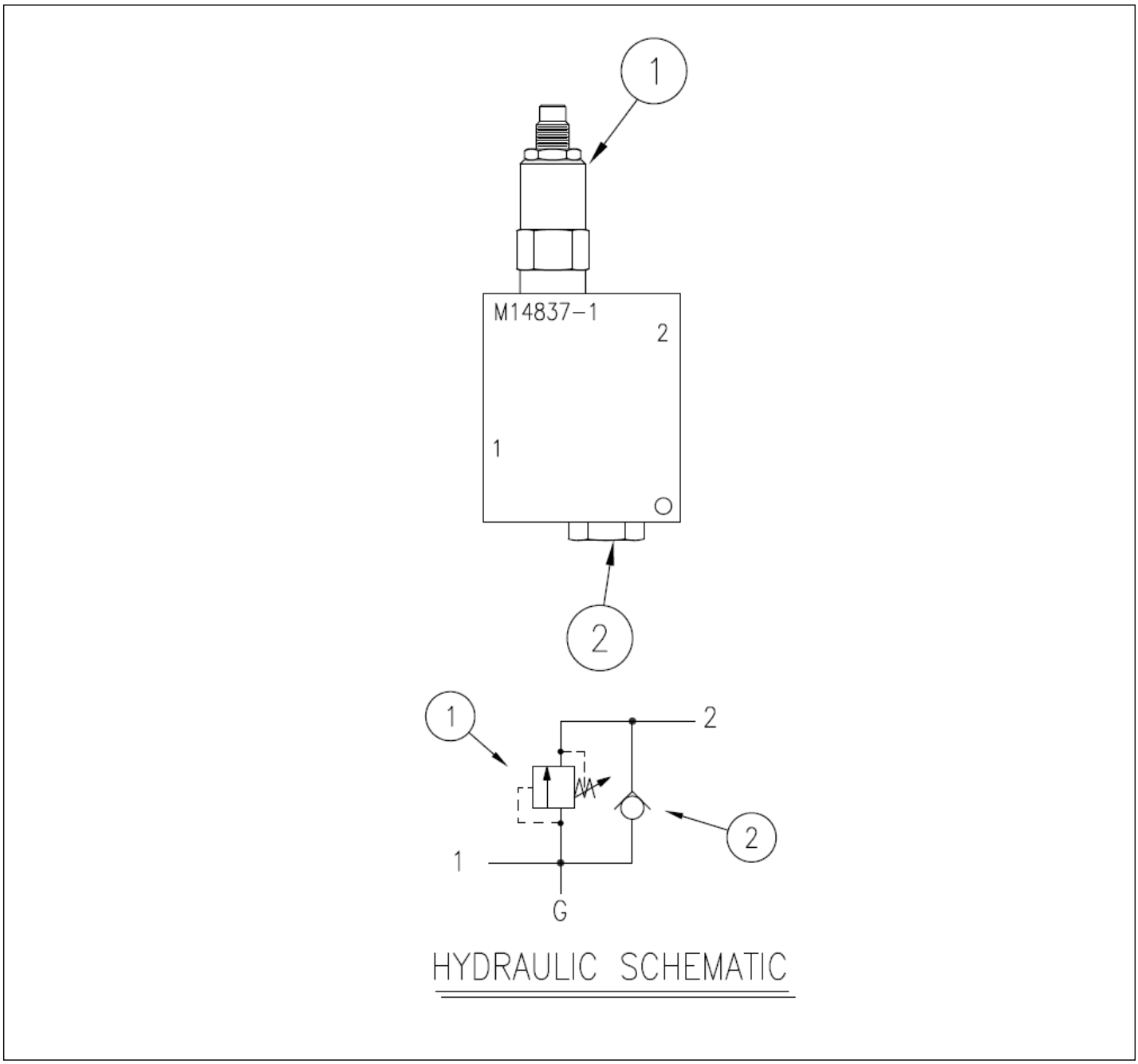

HYDRAULIC SCHEMATIC

Courtesy of Crane.Market

Item	Part No.	Name	Qty	Uom
Not Shown	6019054	COUNTERBALANCE VALVE	1	EA
1	6019343	RELIEF VALVE	1	EA
2	561956	VALVE CART CHECK	1	EA

Courtesy of Crane.Market

HYDRAULICS

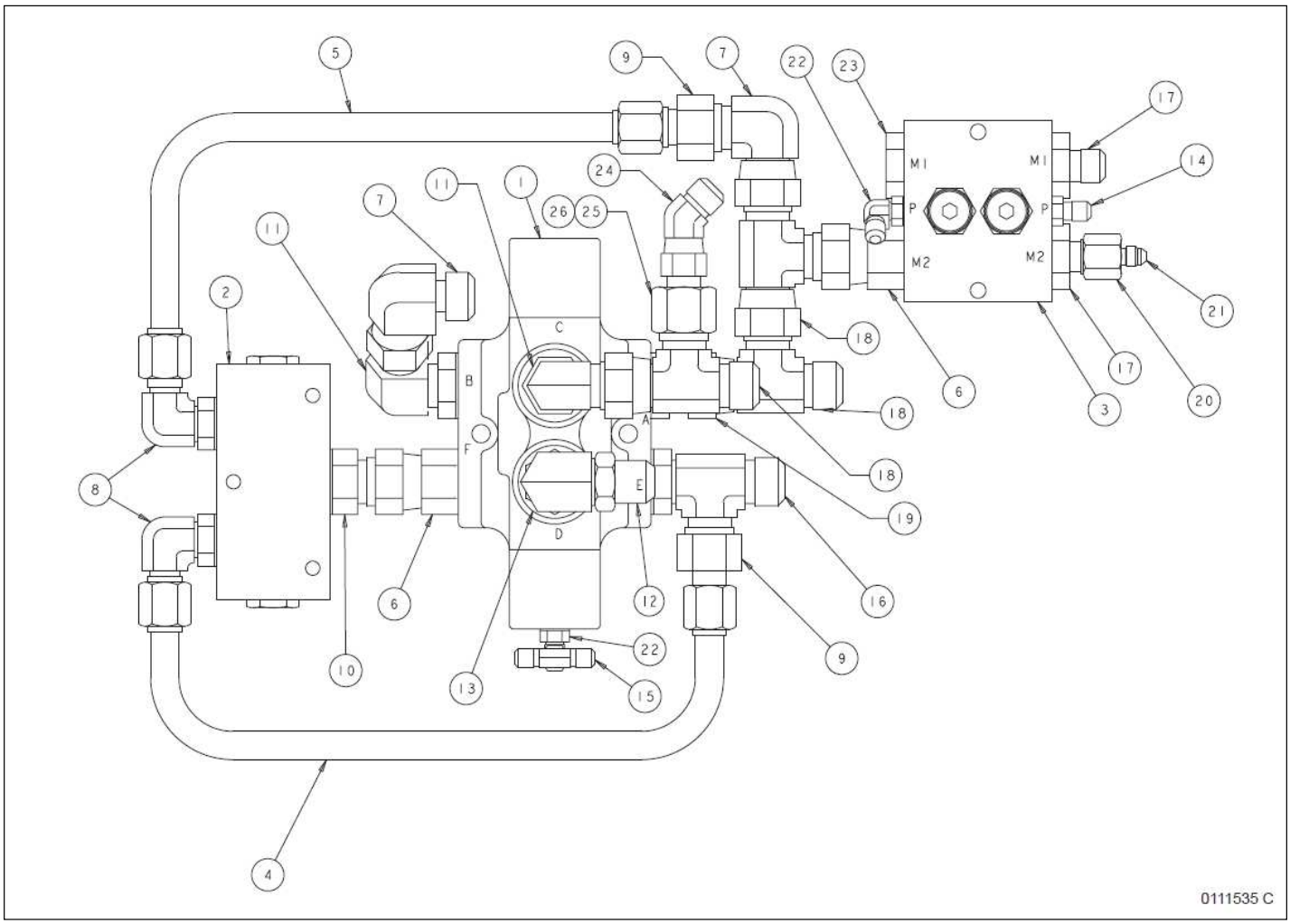

Courtesy of Crane.Market

Item	Part No.	Name	Qty	Uom
1	0080529	SELECTOR VALVE	1	EA
2	6010437	FLOW DIVIDER COMBINER VALVE	1	EA
3	6010613	VALVE PACKAGE	1	EA
4	0111340	5/8 OD TUBE ASSY	1	EA
5	0111338	5/8 OD TUBE ASSY	1	EA
6	5025001	FTG ADPTR SWVL-12B-12S STL	2	EA
7	5037008	FTG ELB90SWVL-12S-12S STL	2	EA
8	5035322	FTG ELB90STRTHD-8B-10S STL	2	EA
9	5064011	FTG RDCR TUBE END-12S10S STL	2	EA
10	5065731	FTG ADPTR STRTHD-8B-12S STL	1	EA
11	5035308	FTG ELB90STRTHD-12B-12S STL	2	EA
12	5033618	FTG ADPTR MALE-12N-12S STL	1	EA
13	5076206	FTG ELB90STRTHD-12B-12N STL	1	EA
14	5065703	FTG ADAPTER STRTHD- 4B- 4S STL	1	EA
15	5036803	FTG TEE SWVL BR-4S-4S STL	1	EA
16	5036108	STRAIGHT THREAD RUN TEE	1	EA
17	5065711	FTG ADPTR STRTHD-12B-8S STL	2	EA
18	5036708	FTG TEE SWVL RUN-12S-12S STL	3	EA
19	5065714	FTG ADPTR STRTHD-12B-12S STL-P	1	EA
20	5063906	FTG NUT-8 STL	1	EA
21	5064002	FTG RDCR-8S-4S W/O NUT STL	1	EA
22	5035303	FTG ELB90STRTHD-4B-4S STL	2	EA
23	5075208	ADAPTER, PLUG, -12 SAE	1	EA
24	5036906	FTG ELB45SWVL-8S-8S STL	1	EA

Courtesy of Crane.Market

Item	Part No.	Name	Qty	Uom
25	5063908	FTG NUT-12S STL	1	EA
26	5064008	FTG RDCR-12S-8S W/O NUT STL	1	EA

Courtesy of Crane.Market

HYDRAULICS

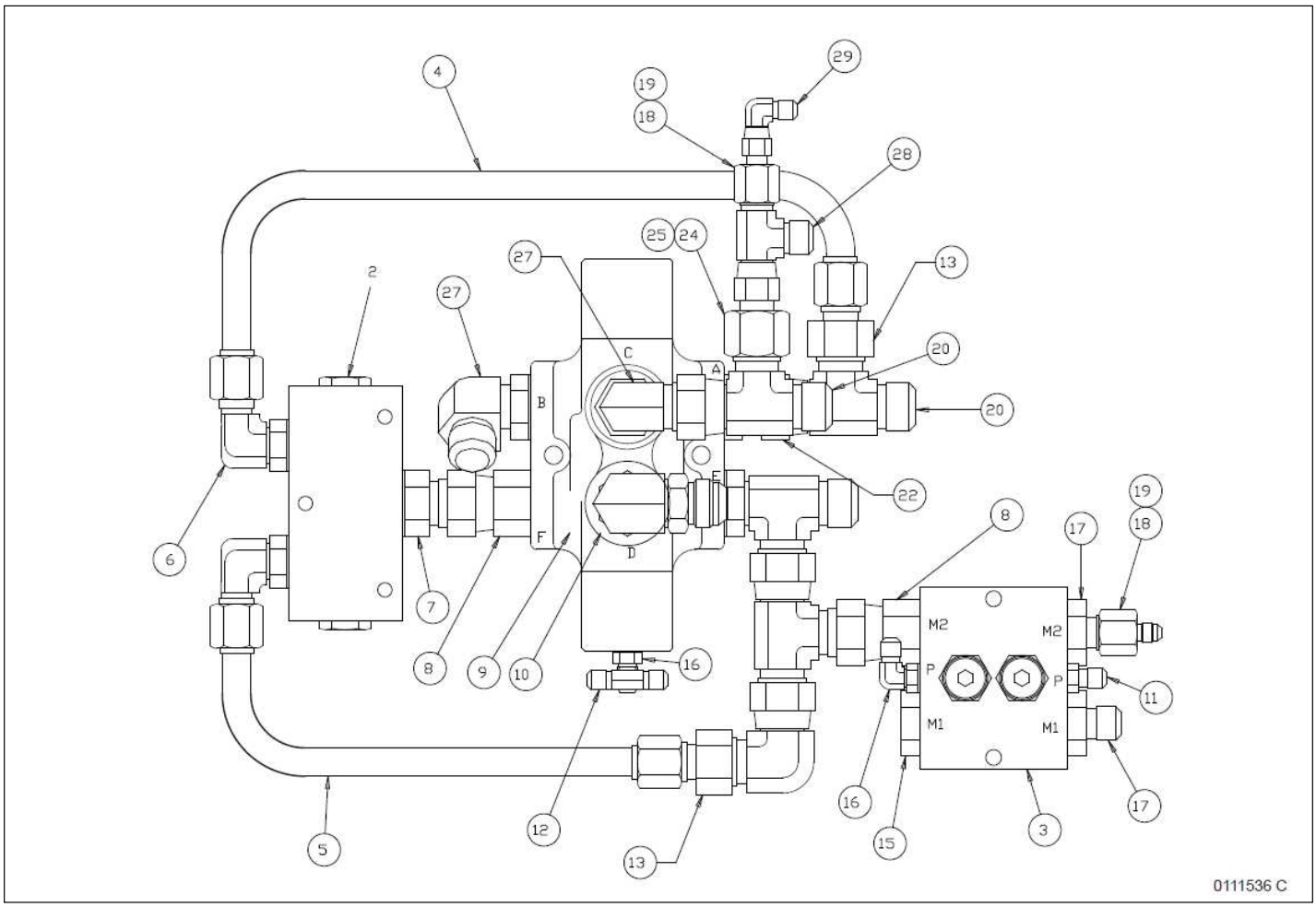

Courtesy of Crane.Market

Item	Part No.	Name	Qty	Uom
1	0080529	SELECTOR VALVE	1	EA
2	6010437	FLOW DIVIDER COMBINER VALVE	1	EA
3	6010613	VALVE PACKAGE	1	EA
4	0111341	5/8 OD TUBE ASSEMBLY	1	EA
5	0111339	5/8 OD TUBE ASSEMBLY	1	EA
6	5035322	FTG ELB90STRTHD-8B-10S STL	2	EA
7	5065731	FTG ADPTR STRTHD-8B-12S STL	1	EA
8	5025001	FTG ADPTR SWVL-12B-12S STL	2	EA
9	5033618	FTG ADPTR MALE-12N-12S STL	1	EA
10	5076206	FTG ELB90STRTHD-12B-12N STL	1	EA
11	5065703	FTG ADAPTER STRTHD- 4B- 4S STL	1	EA
12	5036803	FTG TEE SWVL BR-4S-4S STL	1	EA
13	5064011	FTG RDCR TUBE END-12S10S STL	2	EA
14	5037008	FTG ELB90SWVL-12S-12S STL	1	EA
15	5075208	ADAPTER, PLUG, -12 SAE	1	EA
16	5035303	FTG ELB90STRTHD-4B-4S STL	2	EA
17	5065711	FTG ADPTR STRTHD-12B-8S STL	2	EA
18	5063906	FTG NUT-8 STL	2	EA
19	5064002	FTG RDCR-8S-4S W/O NUT STL	2	EA
20	5036708	FTG TEE SWVL RUN-12S-12S STL	3	EA
21	5036108	STRAIGHT THREAD RUN TEE	1	EA
22	5065714	FTG ADPTR STRTHD-12B-12S STL-P	1	EA
24	5063908	FTG NUT-12S STL	1	EA
25	5064008	FTG RDCR-12S-8S W/O NUT STL	1	EA

Courtesy of Crane.Market

Item	Part No.	Name	Qty	Uom
27	5035308	FTG ELB90STRTHD-12B-12S STL	2	EA
28	5036706	FTG TEE RUN-8S-8S STL	1	EA
29	5037003	SWIVEL NUT 90° ELBOW	1	EA

Courtesy of Crane.Market

HYDRAULICS

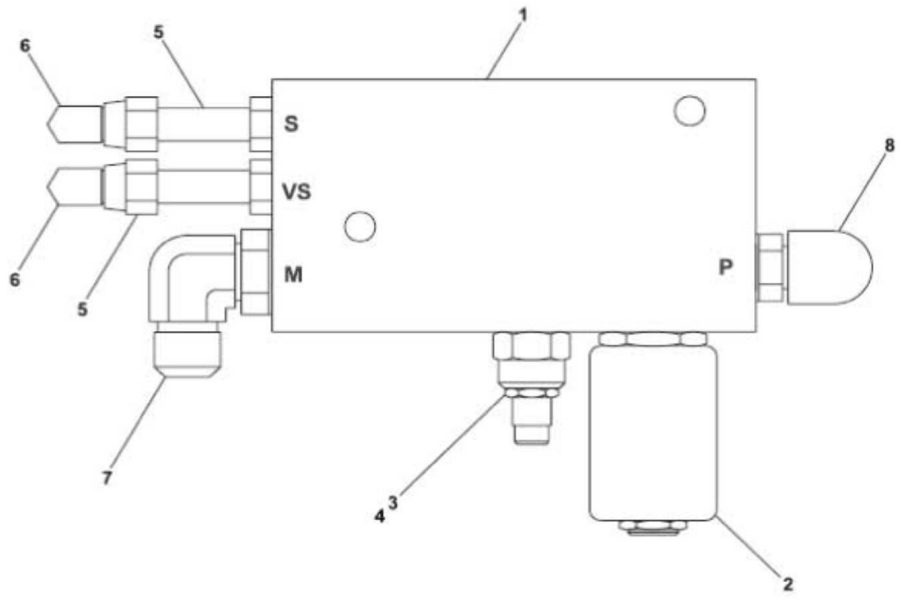

Courtesy of Crane.Market

Item	Part No.	Name	Qty	Uom
1	6010489	AC GENERATOR VALVE	1	EA
2	6010508	CARTRIDGE VALVE WITH COIL	1	EA
Not Shown	6010509	REPLACEMENT CARTRIDGE VALVE	1	EA
Not Shown	3040457	REPLACEMENT COIL, 12 VOLT DC	1	EA
3	6018901	FLOW CONTROL VALVE CARTRIDGE	1	EA
4	6010510	SHUTTLE VALVE CARTRIDGE	1	EA
5	5065803	LONG STRAIGHT THREAD ADAPTER	2	EA
6	5037003	SWIVEL NUT 90° ELBOW	2	EA
7	5035306	STRAIGHT THREAD 90° ELBOW	1	EA
8	5035320	STRAIGHT THREAD 90° ELBOW	1	EA

Courtesy of Crane.Market

HYDRAULICS

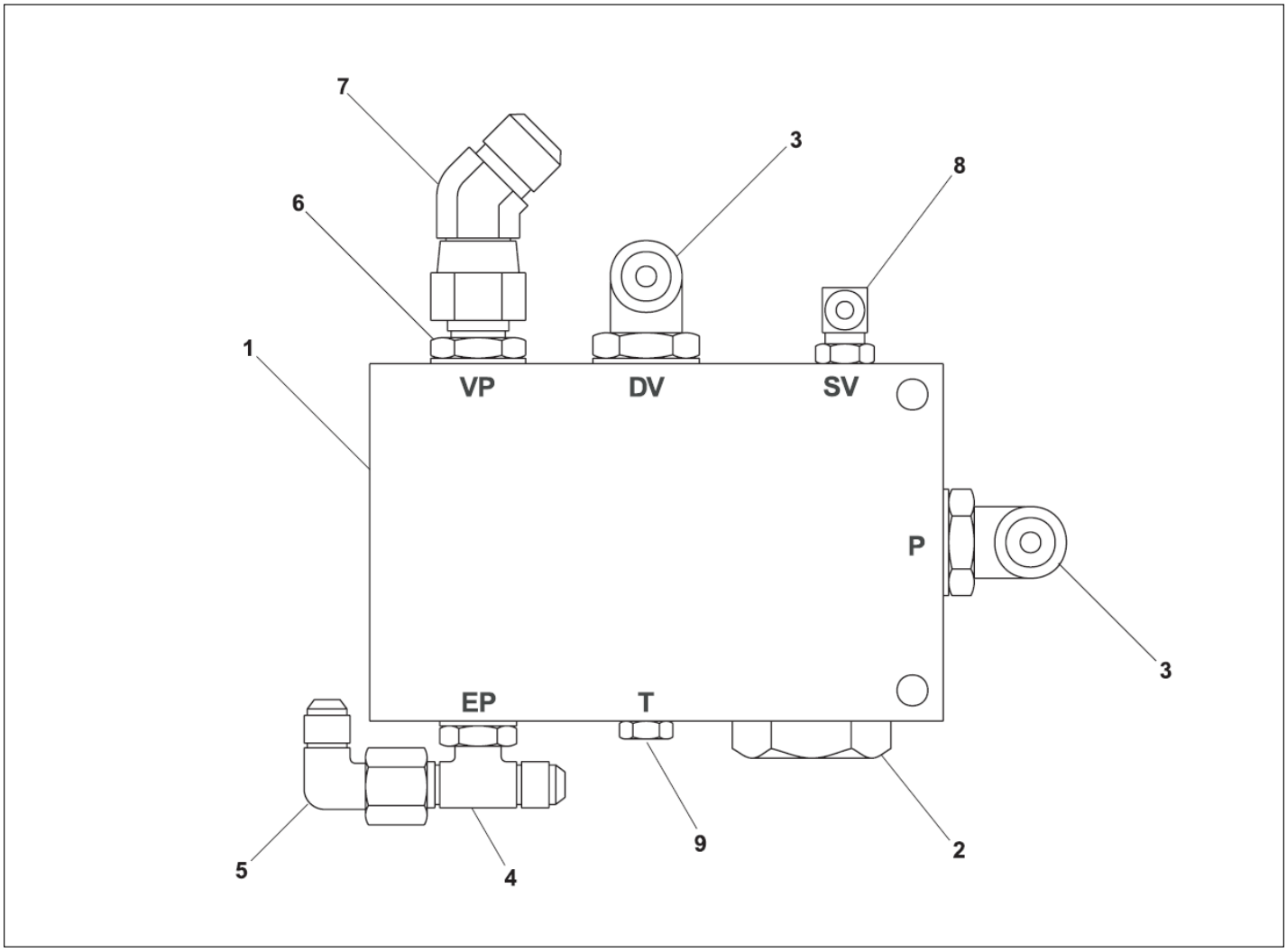

Courtesy of Crane.Market

Item	Part No.	Name	Qty	Uom
1	6010579	VALVE, PRESSURE MANIFOLD - (INCLUDES CHECK VALVE CARTRIDGE)	1	EA
2	6010565	CHECK VALVE CARTRIDGE - (FACTORY PRESET, DO NOT RESET)	1	EA
Not Shown	6010605	SEAL REPAIR KIT	1	EA
3	5035310	STRAIGHT THREAD 90° ELBOW	2	EA
4	5036505	STRAIGHT THREAD BRANCH TEE	1	EA
5	5037005	FTG ELB90SWVL-6S-6S STL	1	EA
6	5065729	FTG, HYD -8 MB TO -10 MJIC	1	EA
7	5036907	SWIVEL NUT 45° ELBOW	1	EA
8	5035318	FTG. ELB90STRTHD-6B-4S	1	EA
9	5075203	HEX HEAD PLUG	1	EA

Courtesy of Crane.Market

HYDRAULICS

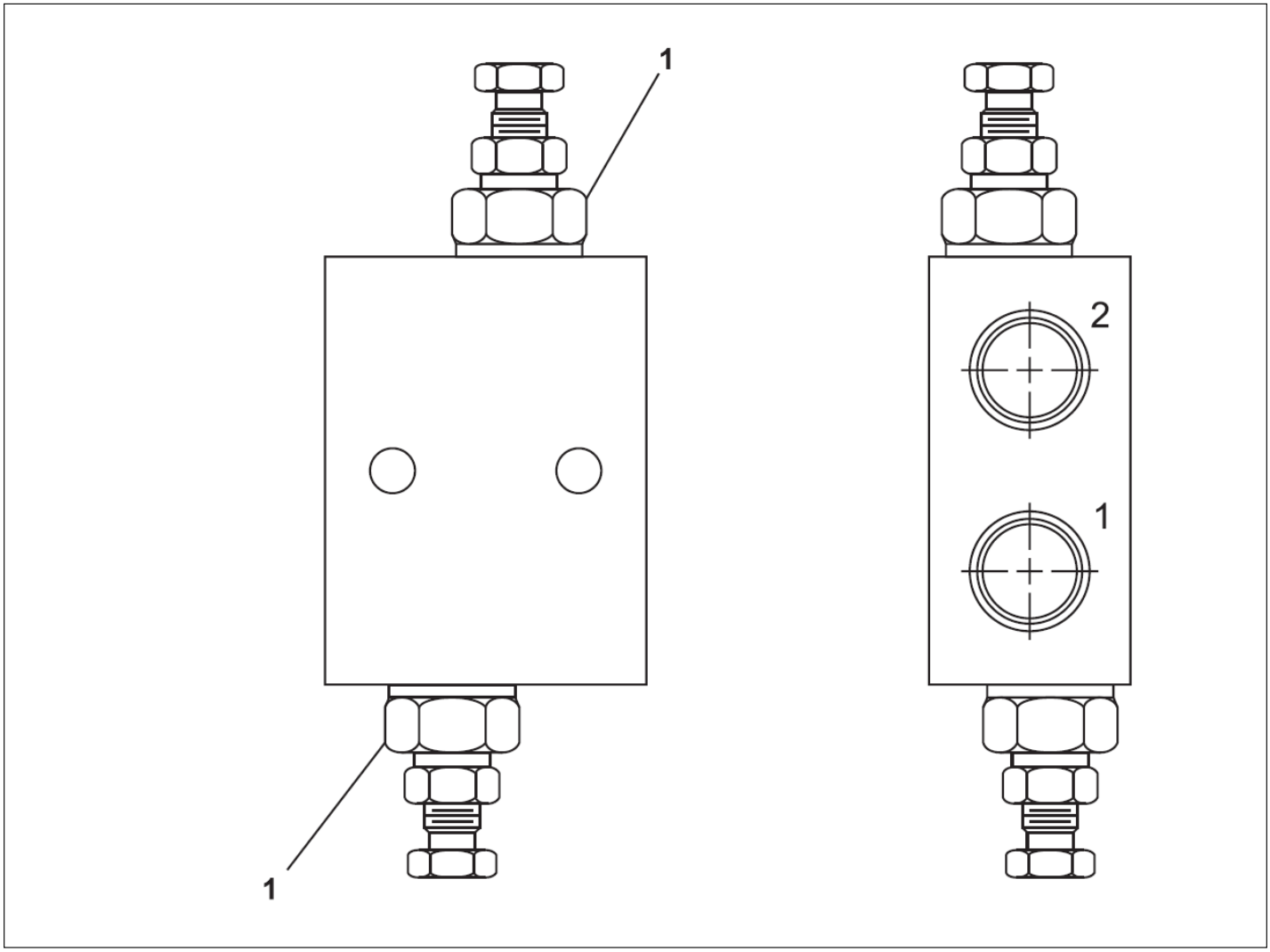

Courtesy of Crane.Market

Item	Part No.	Name	Qty	Uom
Not Shown	6010541	DUAL CROSSOVER RELIEF VALVE	1	EA
1	6010578	CROSSOVER RELIEF CARTRIDGE	2	EA

Courtesy of Crane.Market

HYDRAULICS

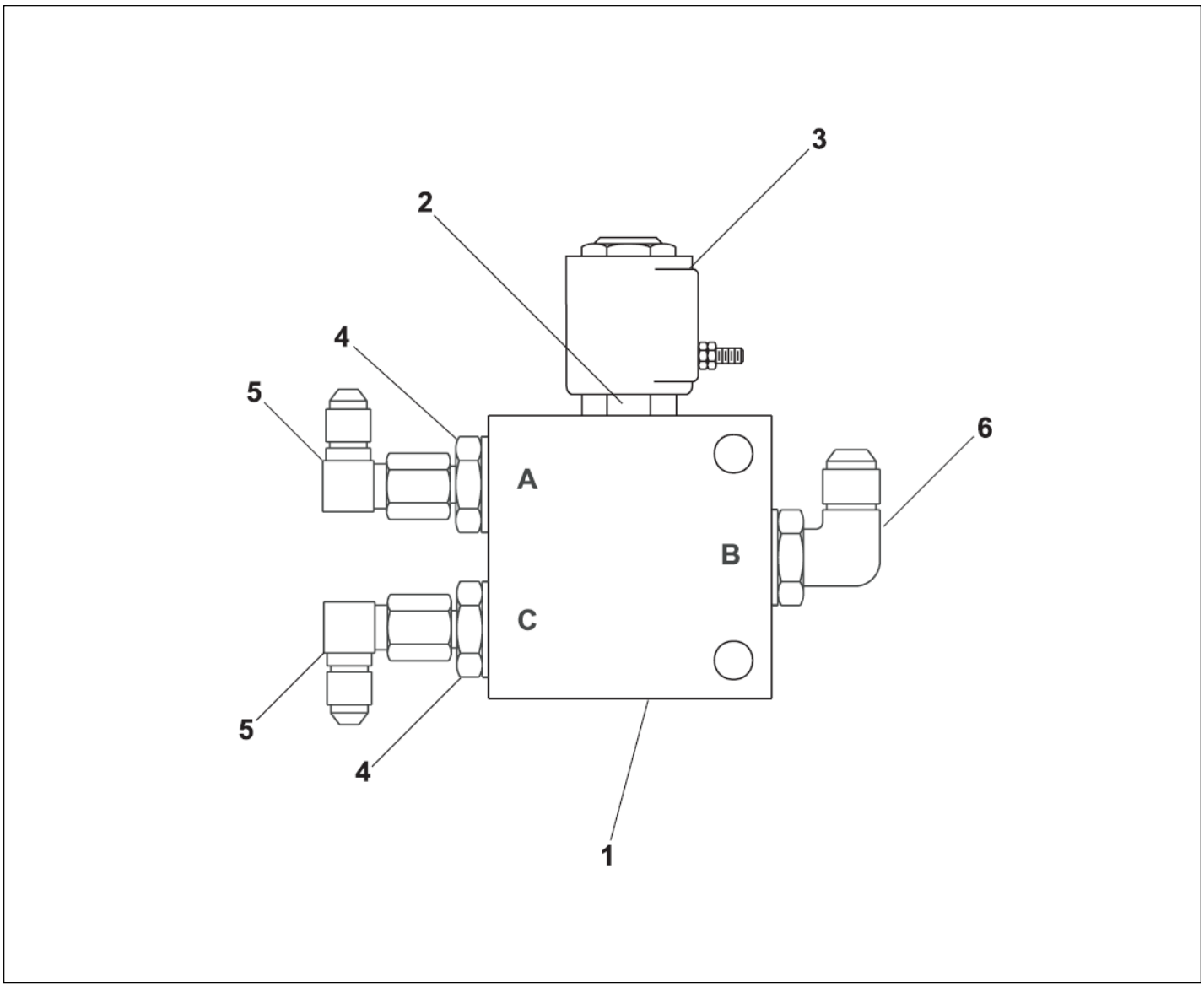

Courtesy of Crane.Market

Item	Part No.	Name	Qty	Uom
1	6010499	SOLENOID VALVE	1	EA
Not Shown	0073620	SEAL REPAIR KIT	1	EA
Not Shown	6010500	VALVE 3 WAY CART WITH 10V COIL	1	EA
2	6010472	REPLACEMENT CARTRIDGE	1	EA
3	3040473	HARNESS AND COIL 12VDC SIZE-8 #8-32 STUD	1	EA
4	5065705	FTG, ADAPTER STRTHD -6B-4S STL	2	EA
5	5037003	SWIVEL NUT 90° ELBOW	2	EA
6	5035318	FTG. ELB90STRTHD-6B-4S	1	EA

Courtesy of Crane.Market

HYDRAULICS

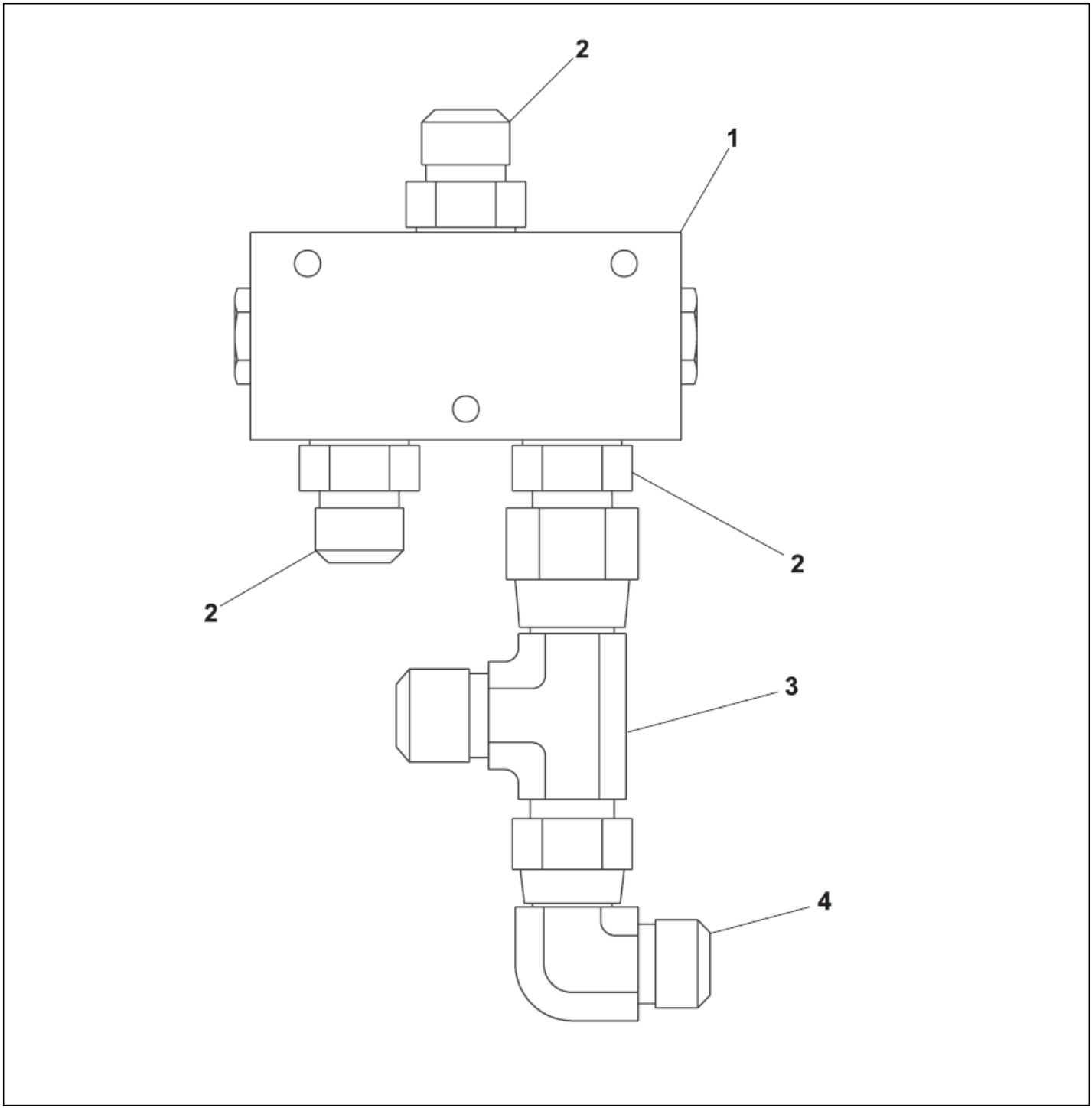

Courtesy of Crane.Market

Item	Part No.	Name	Qty	Uom
1	6010231	FLOW DIVIDER/COMBINER	1	EA
2	5065731	FTG ADPTR STRTHD-8B-12S STL	3	EA
3	5036708	FTG TEE SWVL RUN-12S-12S STL	1	EA
4	5037008	FTG ELB90SWVL-12S-12S STL	1	EA
5	6010604	CARTRIDGE	2	EA
Not Shown	0081547	SPCR .375 1.75 5.00 3H STL – FLUIDTECH VALVE ONLY – ITEM NOT SHOWN	2	EA

Courtesy of Crane.Market

HYDRAULICS

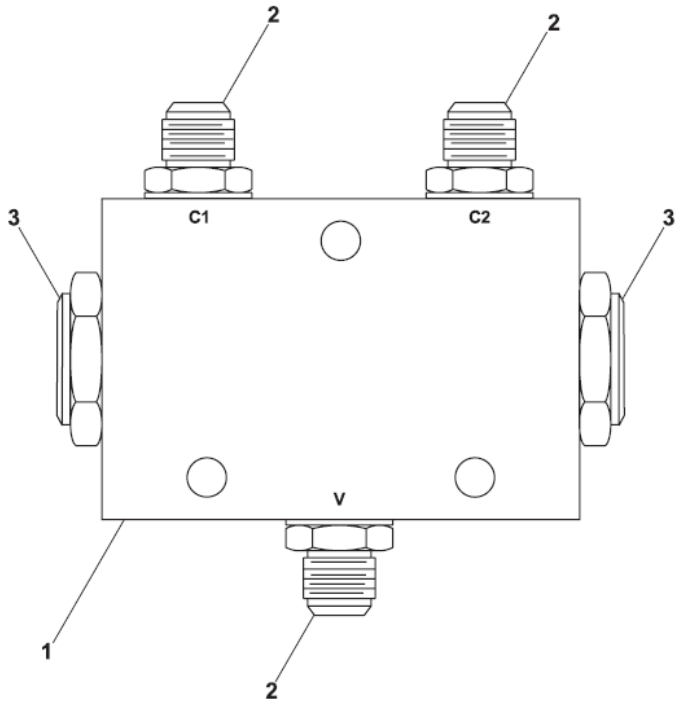

Courtesy of Crane.Market

Item	Part No.	Name	Qty	Uom
Not Shown	0081424	FLOW DIVIDER VALVE SUB-ASSY	1	EA
1	6010231	FLOW DIVIDER/COMBINER	1	EA
2	5065714	FTG ADPTR STRTHD-12B-12S STL-P	3	EA
3	6010604	CARTRIDGE	2	EA

Courtesy of Crane.Market

HYDRAULICS

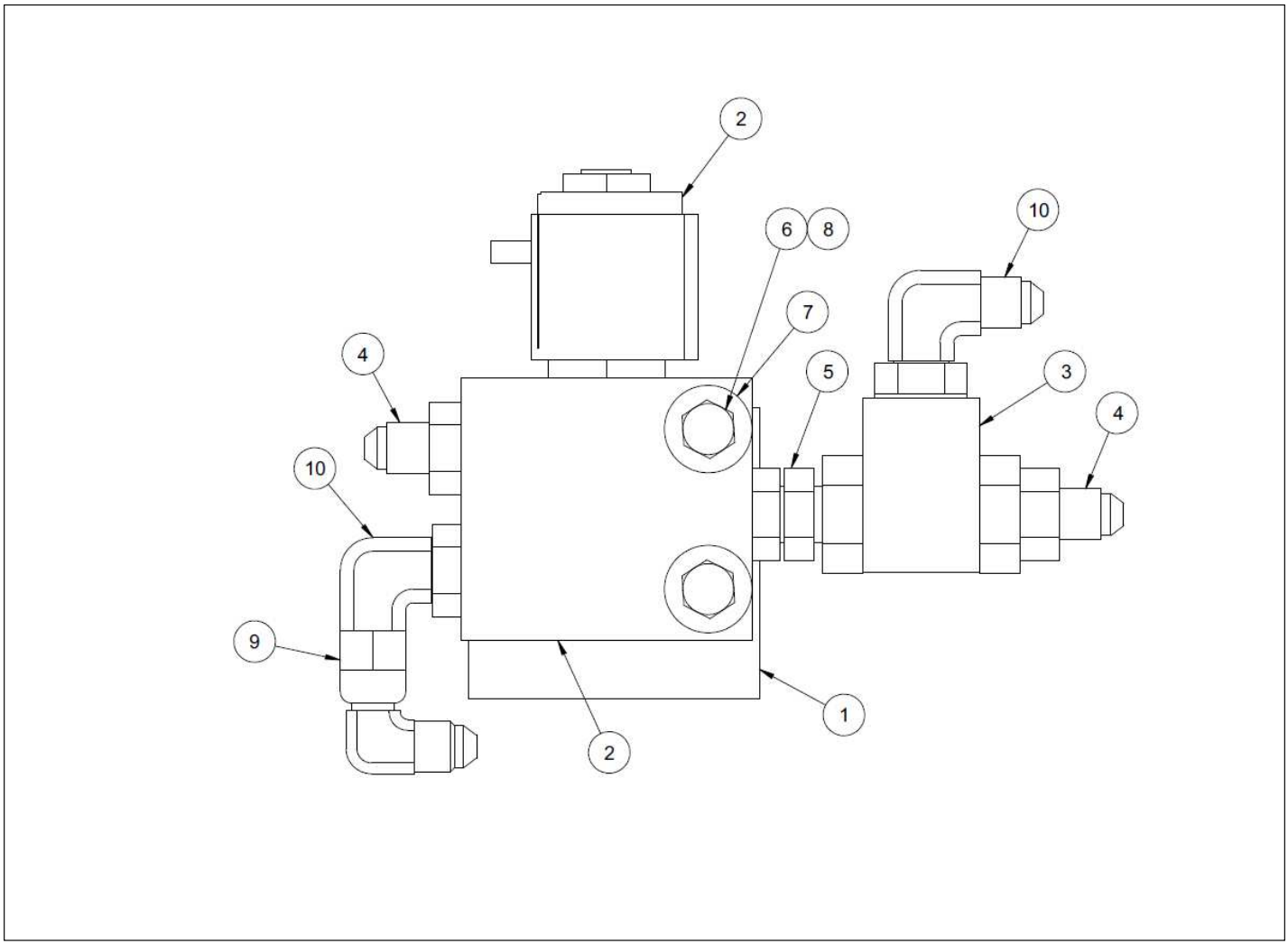

Courtesy of Crane.Market

Item	Part No.	Name	Qty	Uom
1	0071805	BRACKET MOUNTING	1	EA
2	6010499	SOLENOID VALVE	1	EA
3	6010083	SHUTTLE VALVE	1	EA
4	5065705	FTG, ADAPTER STRTHD -6B-4S STL	2	EA
5	5076301	UNION	1	EA
6	970169	BLT HEXHD .250-20 2.00 GR5	2	EA
7	986019	WASHER FLAT .250	2	EA
8	5560004	NUT HEXHD .250-20 LKG	2	EA
9	5037003	SWIVEL NUT 90° ELBOW	1	EA
10	5035318	FTG. ELB90STRTHD-6B-4S	2	EA

Courtesy of Crane.Market

HYDRAULICS

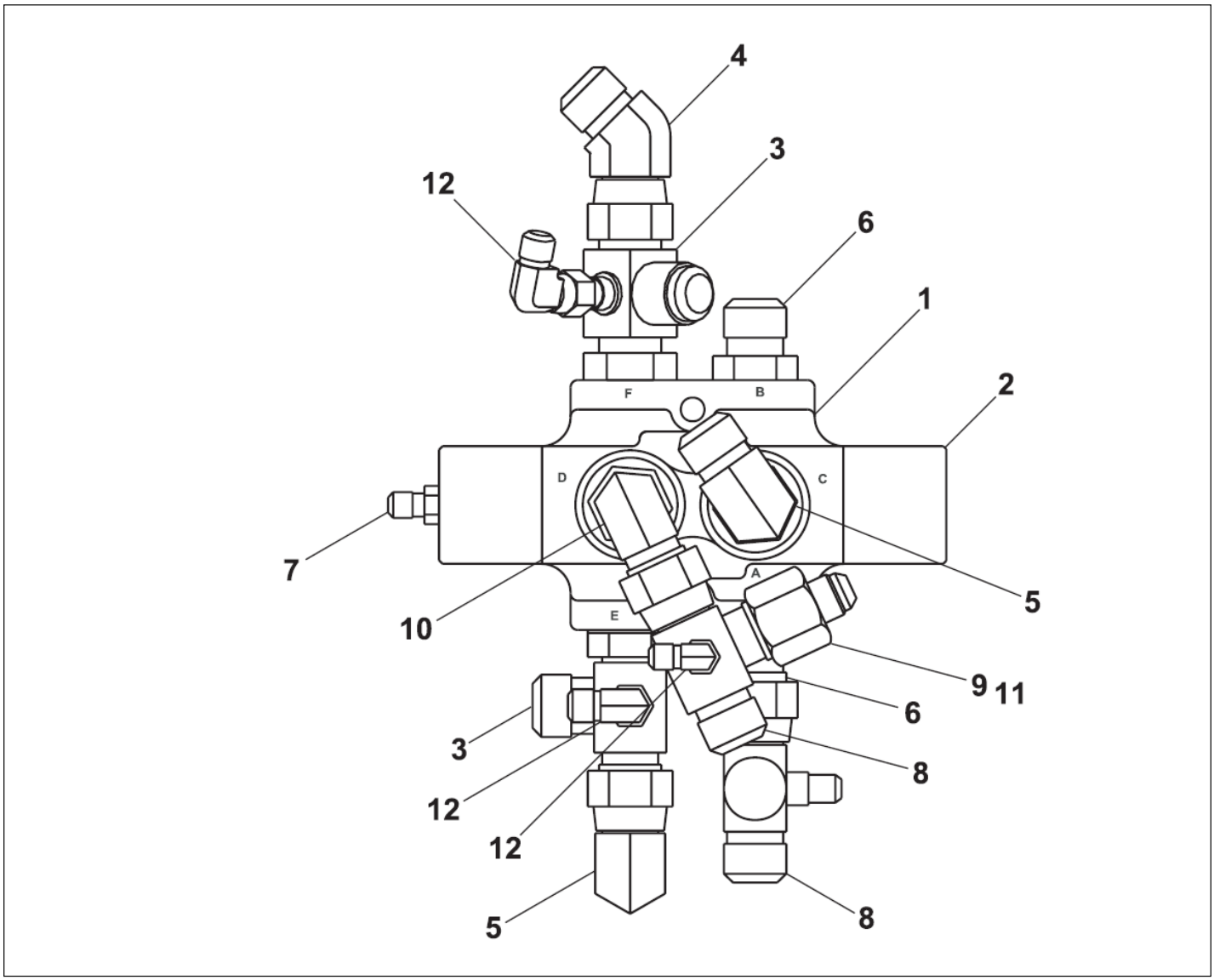

Courtesy of Crane.Market

Item	Part No.	Name	Qty	Uom
1	0080529	SELECTOR VALVE	1	EA
Not Shown	0081127	SEAL REPAIR KIT	1	EA
2	0080528	VALVE END CAP	1	EA
3	0081596	SPECIAL SWIVEL NUT RUN TEE WITH SIDE PORT	2	EA
4	5036908	FTG ELB45SWVL-12S-12S STL	1	EA
5	5037008	FTG ELB90SWVL-12S-12S STL	2	EA
6	5065714	FTG ADPTR STRTHD-12B-12S STL-P	3	EA
7	5065703	FTG ADAPTER STRTHD- 4B- 4S STL	1	EA
8	0081597	SPECIAL SWIVEL NUT RUN TEE WITH SIDE PORT	2	EA
9	5064008	FTG RDCR-12S-8S W/O NUT STL	1	EA
10	5035308	FTG ELB90STRTHD-12B-12S STL	1	EA
11	5063908	FTG NUT-12S STL	1	EA
12	5037005	FTG ELB90SWVL-6S-6S STL	3	EA

Courtesy of Crane.Market

HYDRAULICS

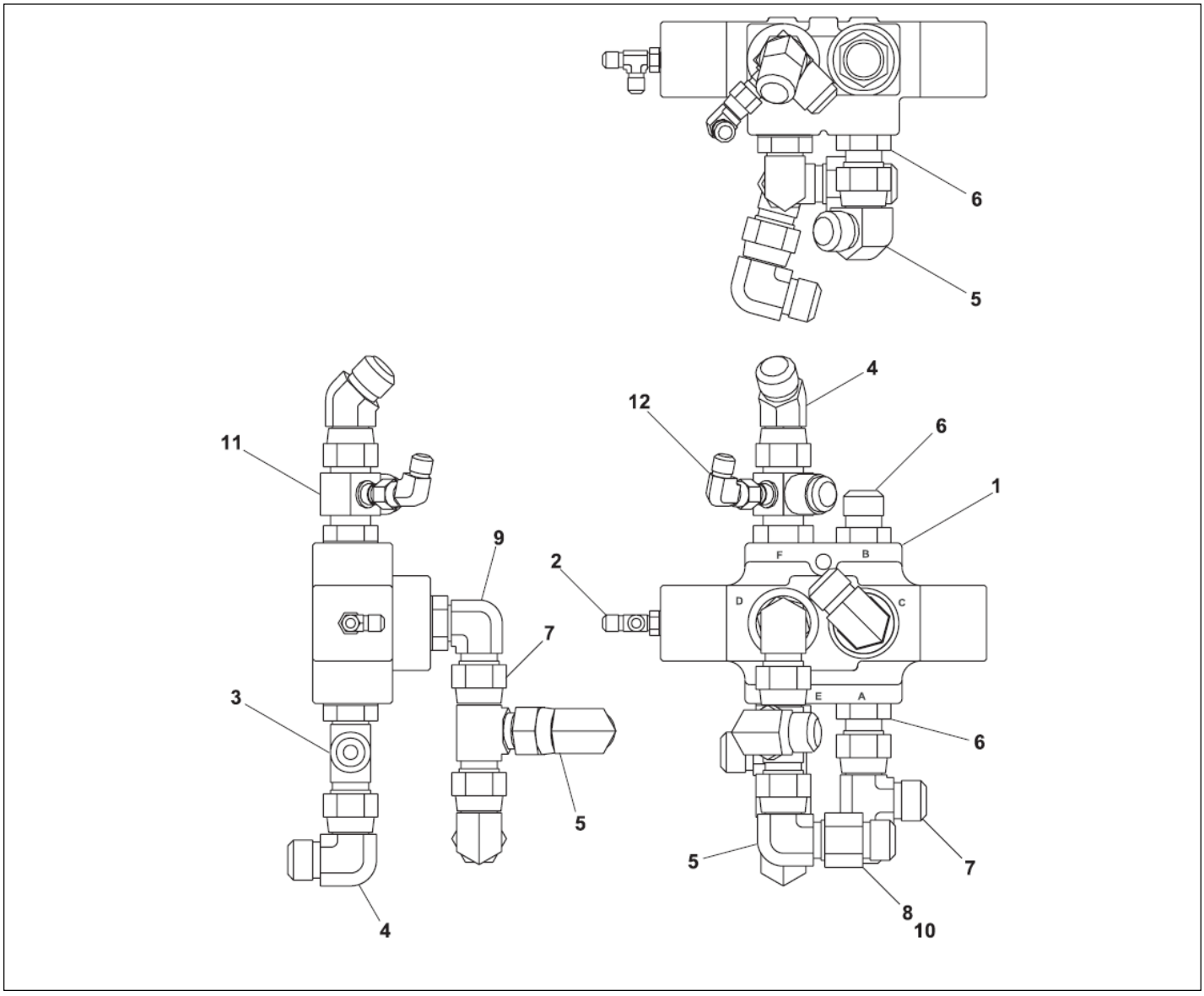

Courtesy of Crane.Market

Item	Part No.	Name	Qty	Uom
1	0080529	SELECTOR VALVE	1	EA
Not Shown	0081127	SEAL REPAIR KIT	1	EA
2	5036103	STRAIGHT THREAD RUN TEE	1	EA
3	5036108	STRAIGHT THREAD RUN TEE	1	EA
4	5036908	FTG ELB45SWVL-12S-12S STL	1	EA
5	5037008	FTG ELB90SWVL-12S-12S STL	4	EA
6	5065714	FTG ADPTR STRTHD-12B-12S STL-P	3	EA
7	5036708	FTG TEE SWVL RUN-12S-12S STL	2	EA
8	5064008	FTG RDCR-12S-8S W/O NUT STL	1	EA
9	5035308	FTG ELB90STRTHD-12B-12S STL	1	EA
10	5063908	FTG NUT-12S STL	1	EA
11	0081596	SPECIAL SWIVEL NUT RUN TEE WITH SIDE PORT	1	EA
12	5037005	FTG ELB90SWVL-6S-6S STL	1	EA

Courtesy of Crane.Market

HYDRAULICS

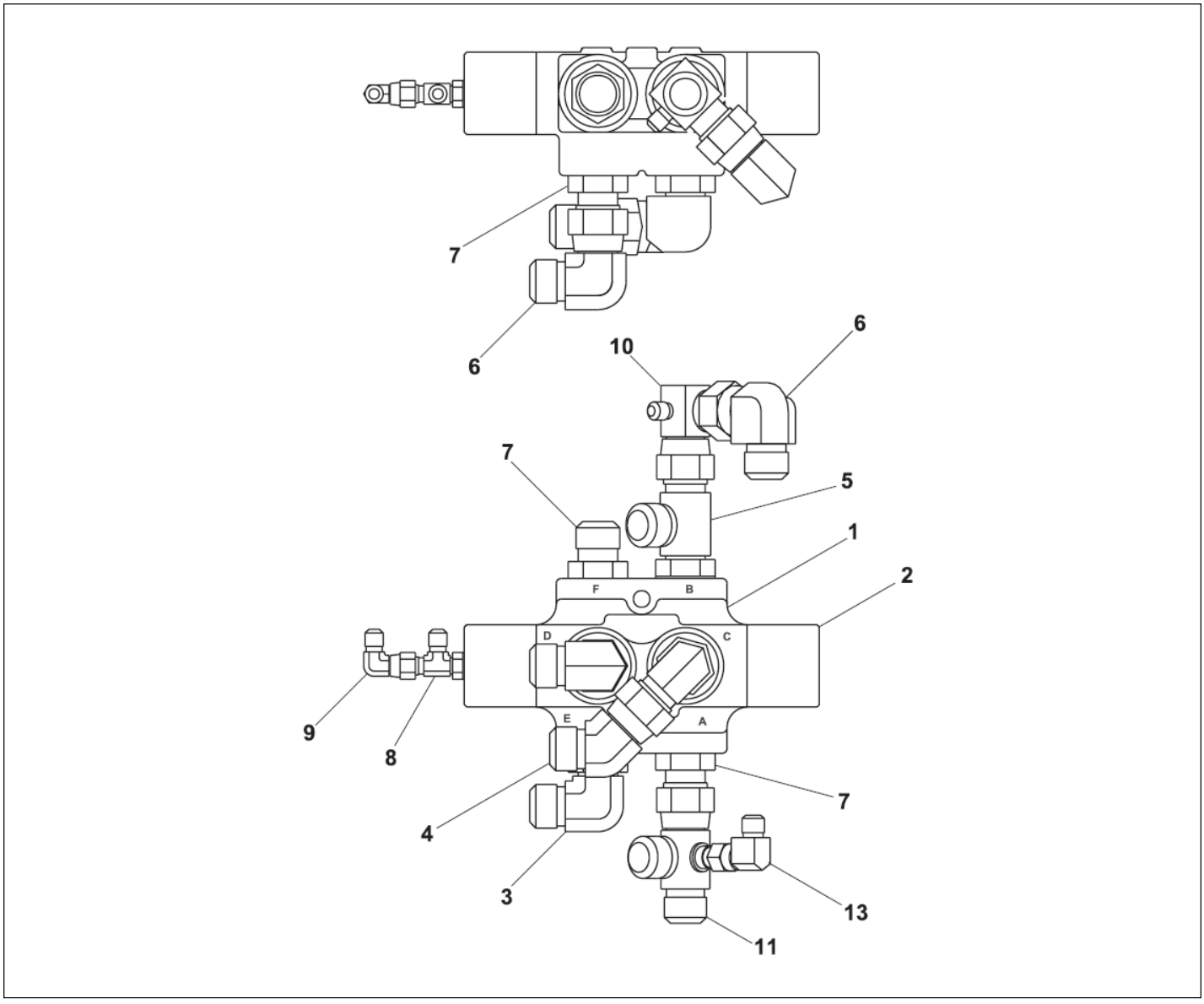

Courtesy of Crane.Market

Item	Part No.	Name	Qty	Uom
1	0080529	SELECTOR VALVE	1	EA
Not Shown	0081127	SEAL REPAIR KIT	1	EA
2	0080528	VALVE END CAP	1	EA
3	5035308	FTG ELB90STRTHD-12B-12S STL	2	EA
4	5036908	FTG ELB45SWVL-12S-12S STL	1	EA
5	5036108	STRAIGHT THREAD RUN TEE	1	EA
6	5037008	FTG ELB90SWVL-12S-12S STL	2	EA
7	5065714	FTG ADPTR STRTHD-12B-12S STL-P	3	EA
8	5036103	STRAIGHT THREAD RUN TEE	1	EA
9	5037003	SWIVEL NUT 90° ELBOW	1	EA
10	0140288	SPECIAL SWIVEL NUT 90° ELBOW WITH SIDE PORT	1	EA
11	0081595	SPECIAL SWIVEL NUT RUN TEE WITH SIDE PORT	1	EA
12	5037005	FTG ELB90SWVL-6S-6S STL	1	EA

Courtesy of Crane.Market

HYDRAULICS

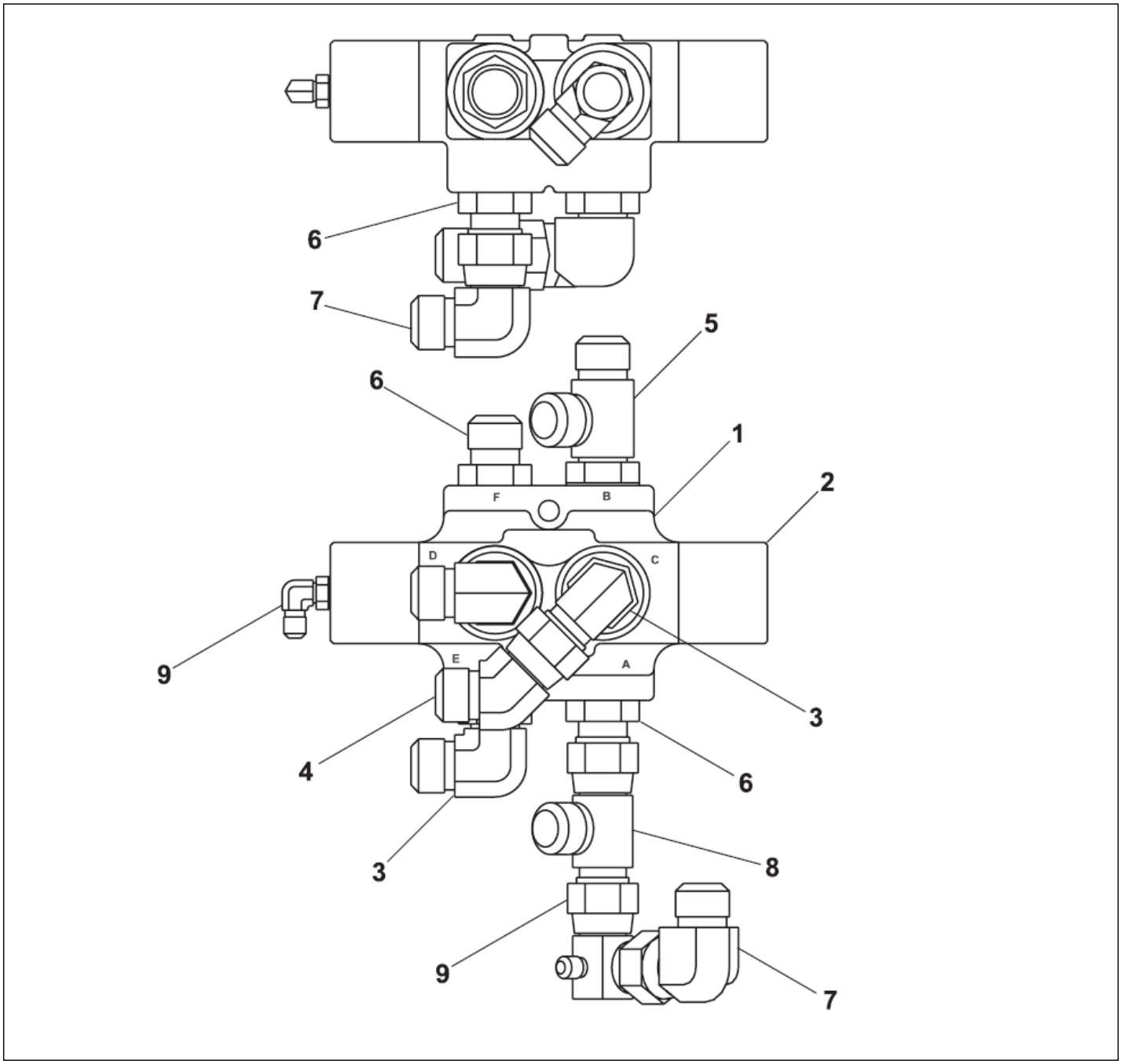

Courtesy of Crane.Market

Item	Part No.	Name	Qty	Uom
1	0080529	SELECTOR VALVE	1	EA
Not Shown	0081127	SEAL REPAIR KIT	1	EA
2	0080528	VALVE END CAP	1	EA
3	5035308	FTG ELB90STRTHD-12B-12S STL	2	EA
4	5036908	FTG ELB45SWVL-12S-12S STL	1	EA
5	5036108	STRAIGHT THREAD RUN TEE	1	EA
6	5065714	FTG ADPTR STRTHD-12B-12S STL-P	3	EA
7	5037008	FTG ELB90SWVL-12S-12S STL	2	EA
8	5036708	FTG TEE SWVL RUN-12S-12S STL	1	EA
9	5035303	FTG ELB90STRTHD-4B-4S STL	1	EA
10	0140500	SPECIAL SWIVEL NUT 90° ELBOW WITH SIDE PORT	1	EA

Courtesy of Crane.Market

HYDRAULICS

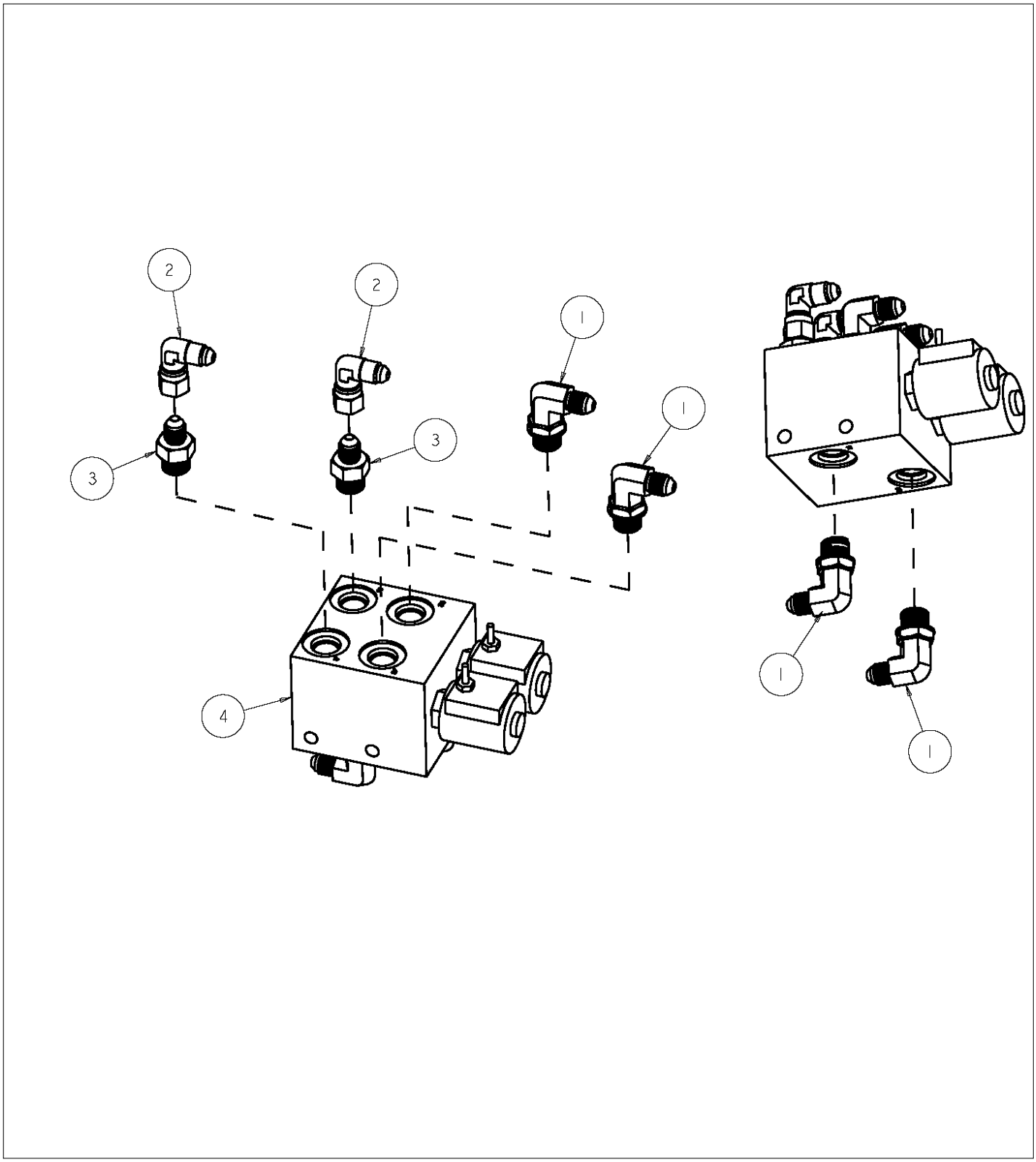

Courtesy of Crane.Market

Item	Part No.	Name	Qty	Uom
1	5035318	FTG. ELB90STRTHD-6B-4S	4	EA
2	5037003	SWIVEL NUT 90° ELBOW	2	EA
3	5065705	FTG, ADAPTER STRTHD -6B-4S STL	2	EA
4	6019093	VALVE PLAT/JIB SELECTOR	1	EA

Courtesy of Crane.Market

HYDRAULICS

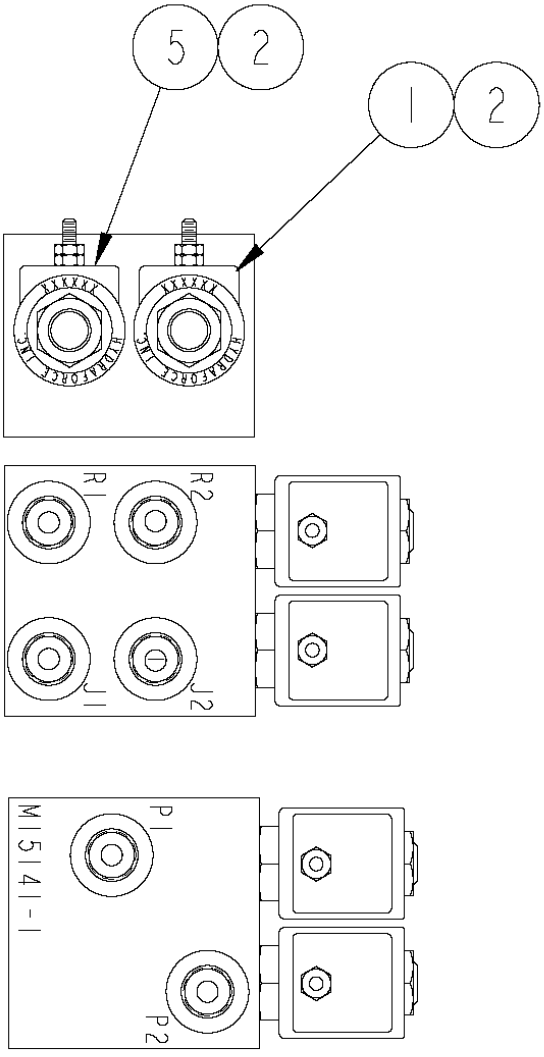

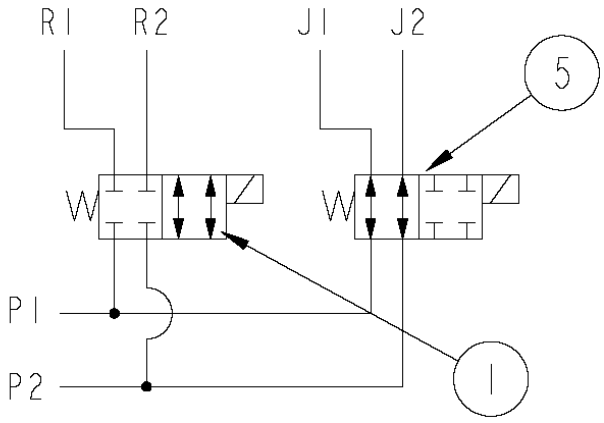

HYDRAULIC SCHEMATIC

Courtesy of Crane.Market

Item	Part No.	Name	Qty	Uom
1	6091591	HF SV08-41-0-N-00 4-WAY N.C. SOL VLV	1	EA
2	3040473	HARNESS AND COIL 12VDC SIZE-8 #8-32 STUD	2	EA
5	6091592	HF SV08-42-0-N-00 4-WAY N.O. SOL VLV	1	EA

Courtesy of Crane.Market

HYDRAULICS

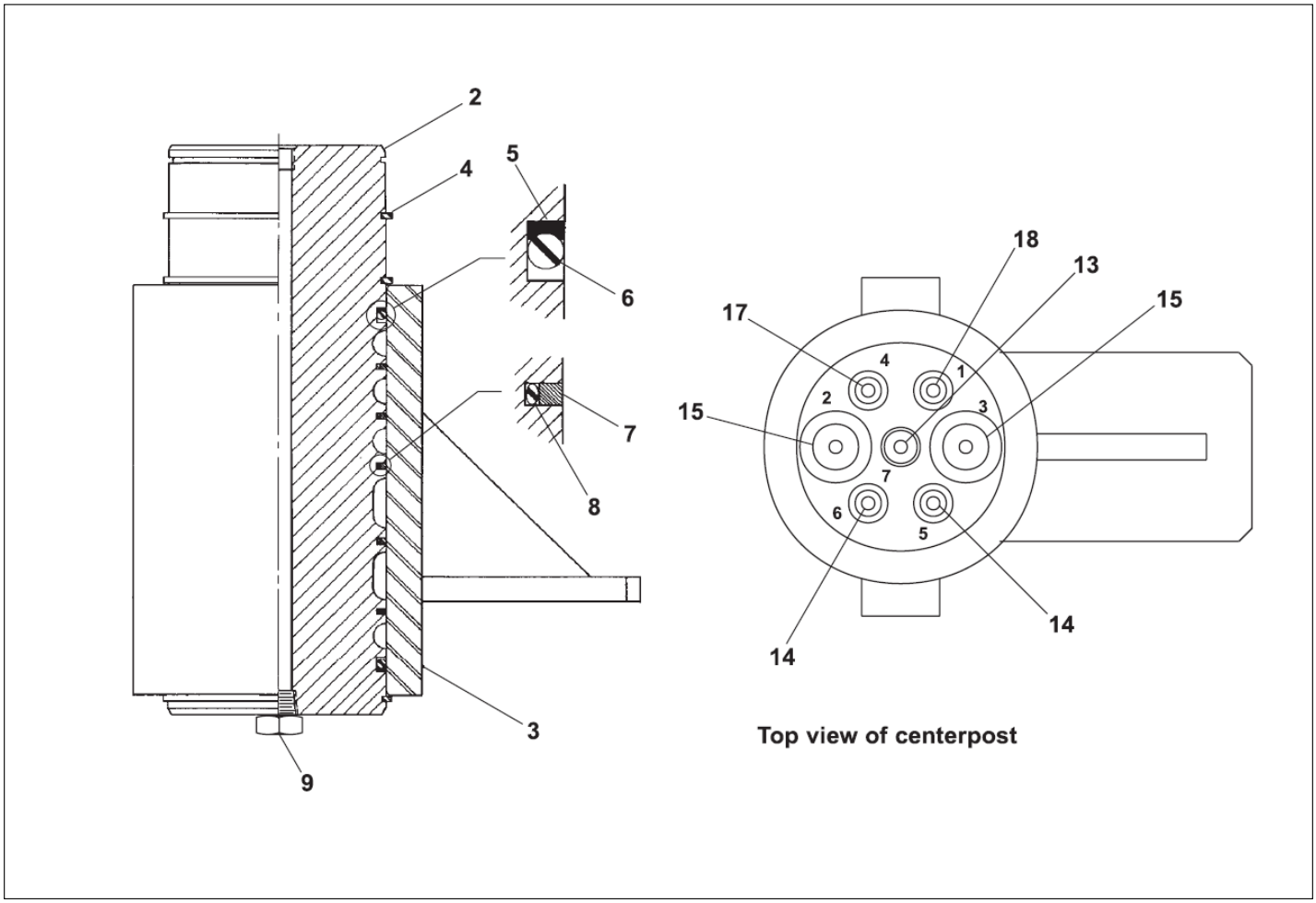

Courtesy of Crane.Market

Item	Part No.	Name	Qty	Uom
Not Shown	0081486	CENTERPOST AND FITTINGS	1	EA
1	0110465	CENTERPOST SUBASSEMBLY	1	EA
Not Shown	0070991	SEAL REPAIR KIT - (KIT INCLUDES ITEMS 5, 6, 7 AND 8)	1	EA
2	0110466	CENTERPOST MANIFOLD	1	EA
3	0110467	CENTERPOST HOUSING	1	EA
4	5590003	RETAINING RING	3	EA
5	PNNA	PARBAK SEAL – KIT ITEM	2	EA
6	PNNA	O-RING – KIT ITEM	2	EA
7	PNNA	SEAL RING – KIT ITEM	5	EA
8	PNNA	O-RING – KIT ITEM	5	EA
9	7714203	PIPE PLUG, 3/8 NPT SQ. HD. BLK.	1	EA
Not Shown	PNNA	CENTER POST AND MANIFOLD PORT FITTINGS – FITTINGS NOT SHOWN		EA
Not Shown	PNNA	PORTS MARKED ON PARTS		EA
10	5035308	FTG ELB90STRTHD-12B-12S STL	2	EA
11	5035316	FTG ELB90STRTHD-10B-8S STL	1	EA
12	5035318	FTG. ELB90STRTHD-6B-4S	1	EA
13	5075205	FTG PL HEX HD-8B STL	3	EA
14	5065707	STRAIGHT THREAD ADAPTER - (CENTERPOST PORTS NO 5 AND NO 6) (FITTINGS NOT SHOWN, PORTS MARKED ON PARTS)	2	EA
15	5065714	FTG ADPTR STRTHD-12B-12S STL-P	2	EA
16	5035305	FTG ELB90STRTHD-6B-6S STL	2	EA
17	5065705	FTG, ADAPTER STRTHD -6B-4S STL	1	EA
18	5065728	FTG ADAPTER STRTHD -6B-8S	1	EA

Courtesy of Crane.Market

HYDRAULICS

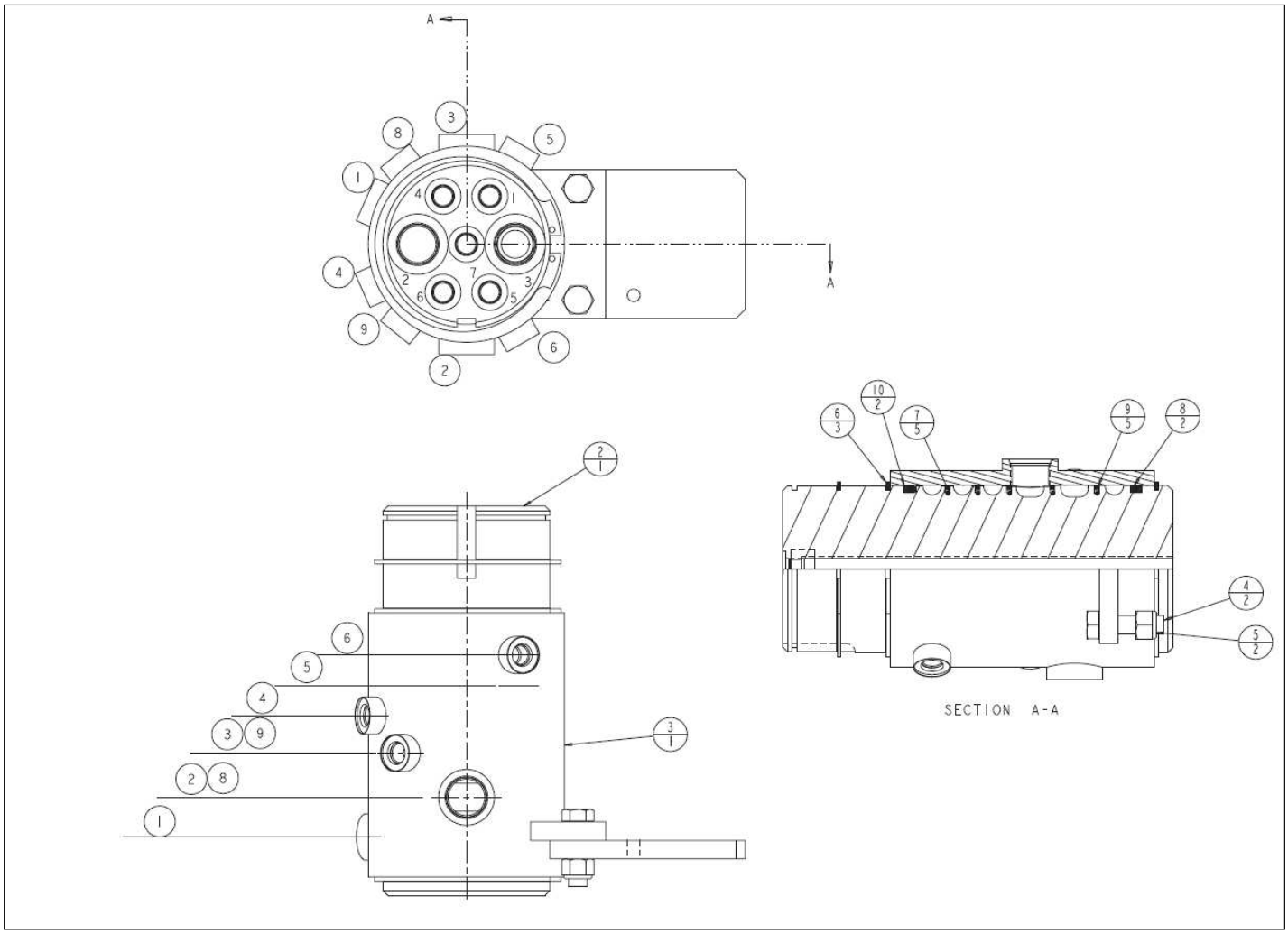

Courtesy of Crane.Market

Item	Part No.	Name	Qty	Uom
Not Shown	0081486	CENTERPOST AND FITTINGS	1	EA
1	0110465	CENTERPOST SUBASSEMBLY	1	EA
Not Shown	0070991	SEAL REPAIR KIT - (KIT INCLUDES ITEMS 5, 6, 7 AND 8)	1	EA
2	0110466	CENTERPOST MANIFOLD	1	EA
3	0110467	CENTERPOST HOUSING	1	EA
4	970919	BLT HEXHD .500-13 1.75 GR5	2	EA
5	5560039	NUT LKG .500-13	2	EA
6	5590003	RETAINING RING	3	EA
7	7110155	O-RING 4 OD X 4.19 ID X .10 DIA	5	EA
8	7110346	O-RING 4.125 ID 4.5 OD .1875 DIA	2	EA
9	7140008	SEAL RING, 4.5 OD X .110 SQ	5	EA
10	7140346	PARBAK SEAL-PARKER #8-346-N300-9	2	EA

Courtesy of Crane.Market

HYDRAULICS

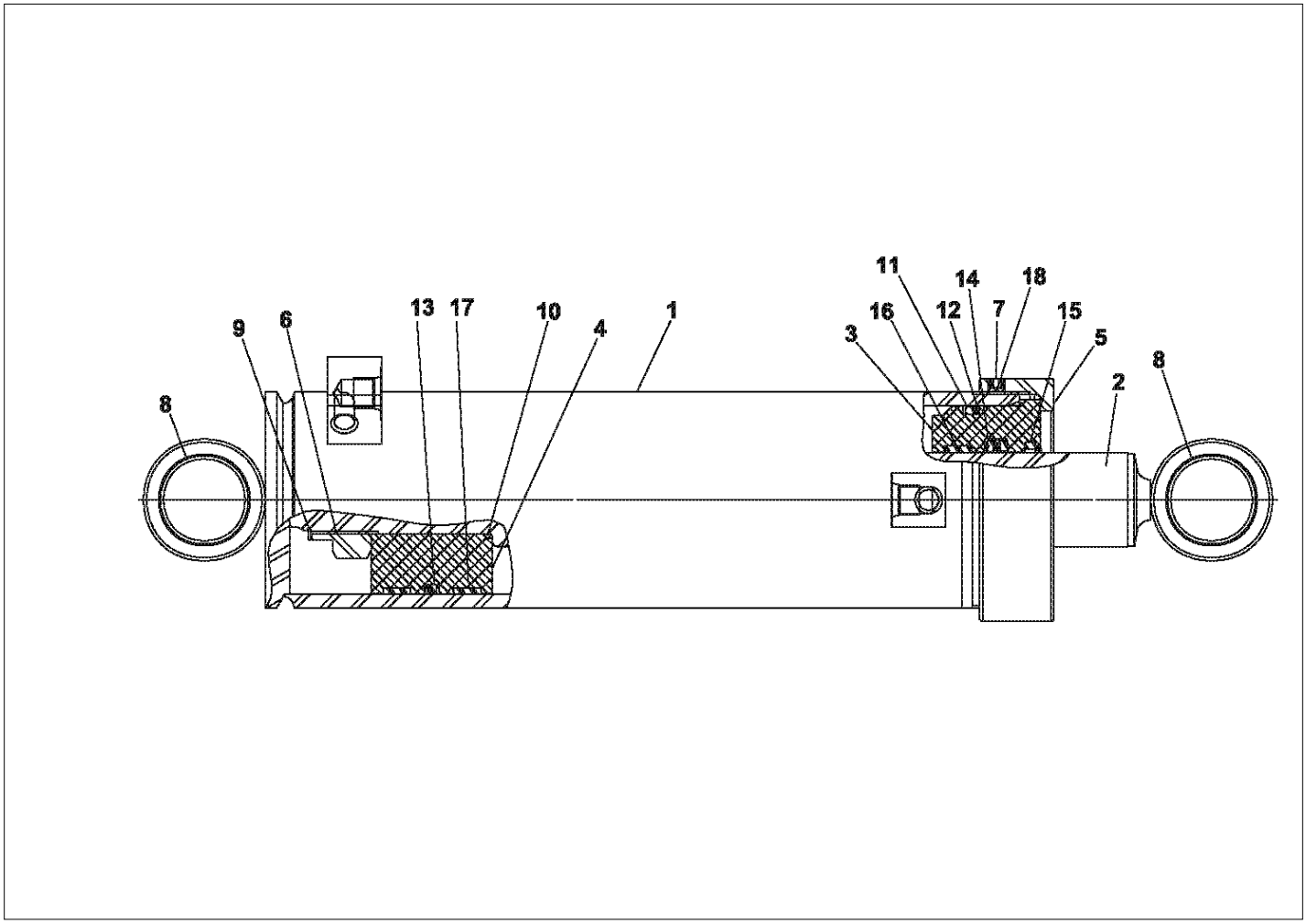

Courtesy of Crane.Market

Item	Part No.	Name	Qty	Uom
Not Shown	0074799	CYL 3.50 9.50 1.75 LEVEL/STEER	1	EA
1	PNNA	TUBE	1	EA
2	6091374	KIT	1	EA
3	6091257	ROD	1	EA
4	6091256	HEAD GLAND	1	EA
5	6091255	HEAD GLAND CAP	1	EA
6	6091259	HEAD GLAND CAP	1	EA
7	5569835	SET SCREW 5/16-18 X 1/4 INCH LONG	1	EA
8	2502416	BEARING	4	EA
Not Shown	6091260	SEAL REPAIR KIT - (KIT INCLUDES ITEMS 10-19)	1	EA
9	PNNA	SNAP RING – KIT ITEM	1	EA
10	PNNA	O-RING – KIT ITEM	1	EA
11	PNNA	O-RING – KIT ITEM	1	EA
12	PNNA	BACK-UP – KIT ITEM	1	EA
13	PNNA	CAPPED T-SEAL – KIT ITEM	1	EA
14	PNNA	DEEP Z-SEAL – KIT ITEM	1	EA
15	PNNA	ROD WIPER – KIT ITEM	1	EA
16	PNNA	WEAR BAND – KIT ITEM	1	EA
17	PNNA	WEAR BAND – KIT ITEM	2	EA
18	PNNA	LOCKING INSERT – KIT ITEM	1	EA

Courtesy of Crane.Market

HYDRAULICS

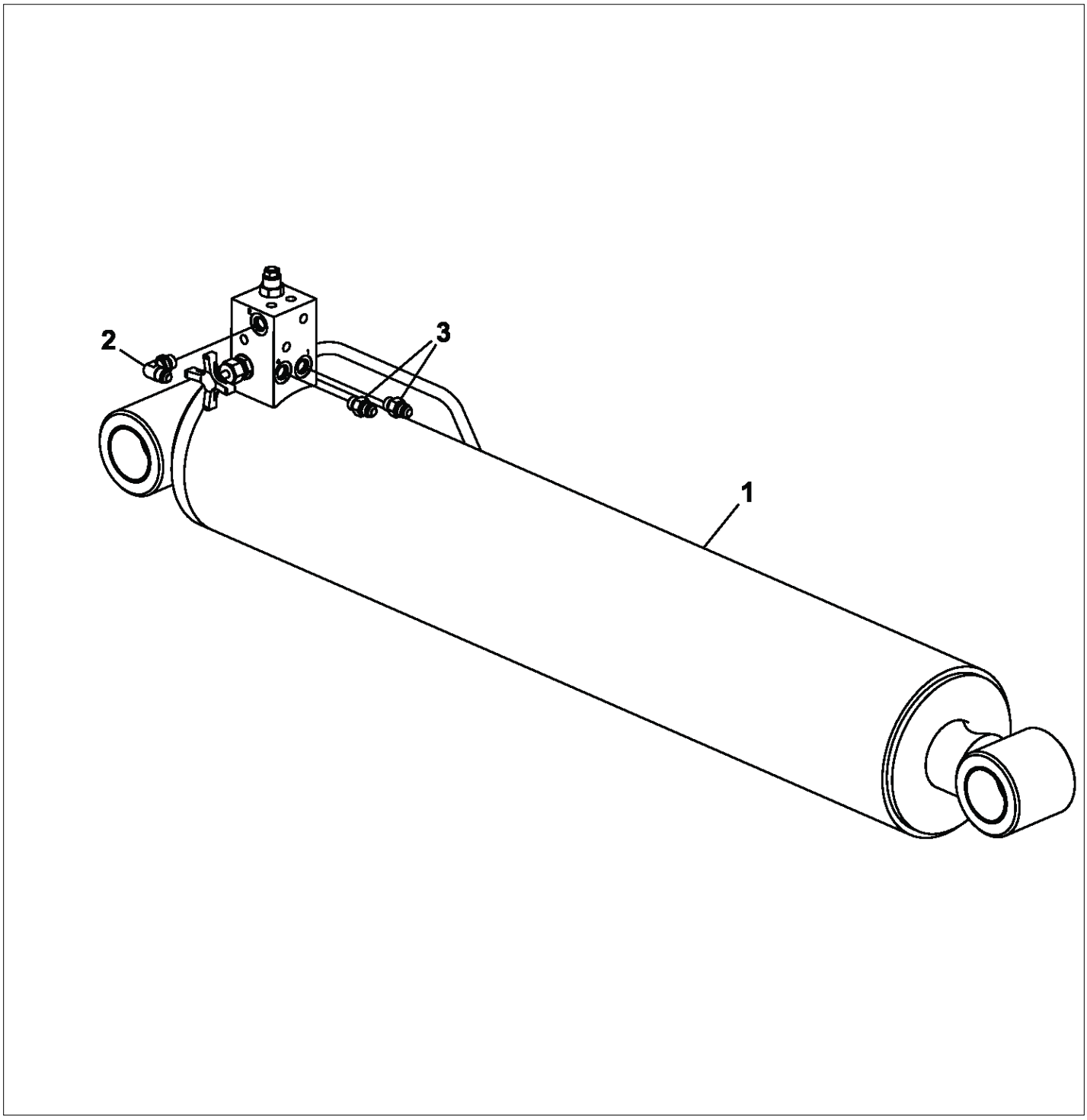

Courtesy of Crane.Market

Item	Part No.	Name	Qty	Uom
1	0080061	CYLINDER, LIFT GBI	1	EA
Not Shown	0083473	LIFT CYL	1	EA
2	5035305	FTG ELB90STRTHD-6B-6S STL	1	EA
3	5065707	STRAIGHT THREAD ADAPTER - (CENTERPOST PORTS NO 5 AND NO 6) (FITTINGS NOT SHOWN, PORTS MARKED ON PARTS)	2	EA

Courtesy of Crane.Market

HYDRAULICS

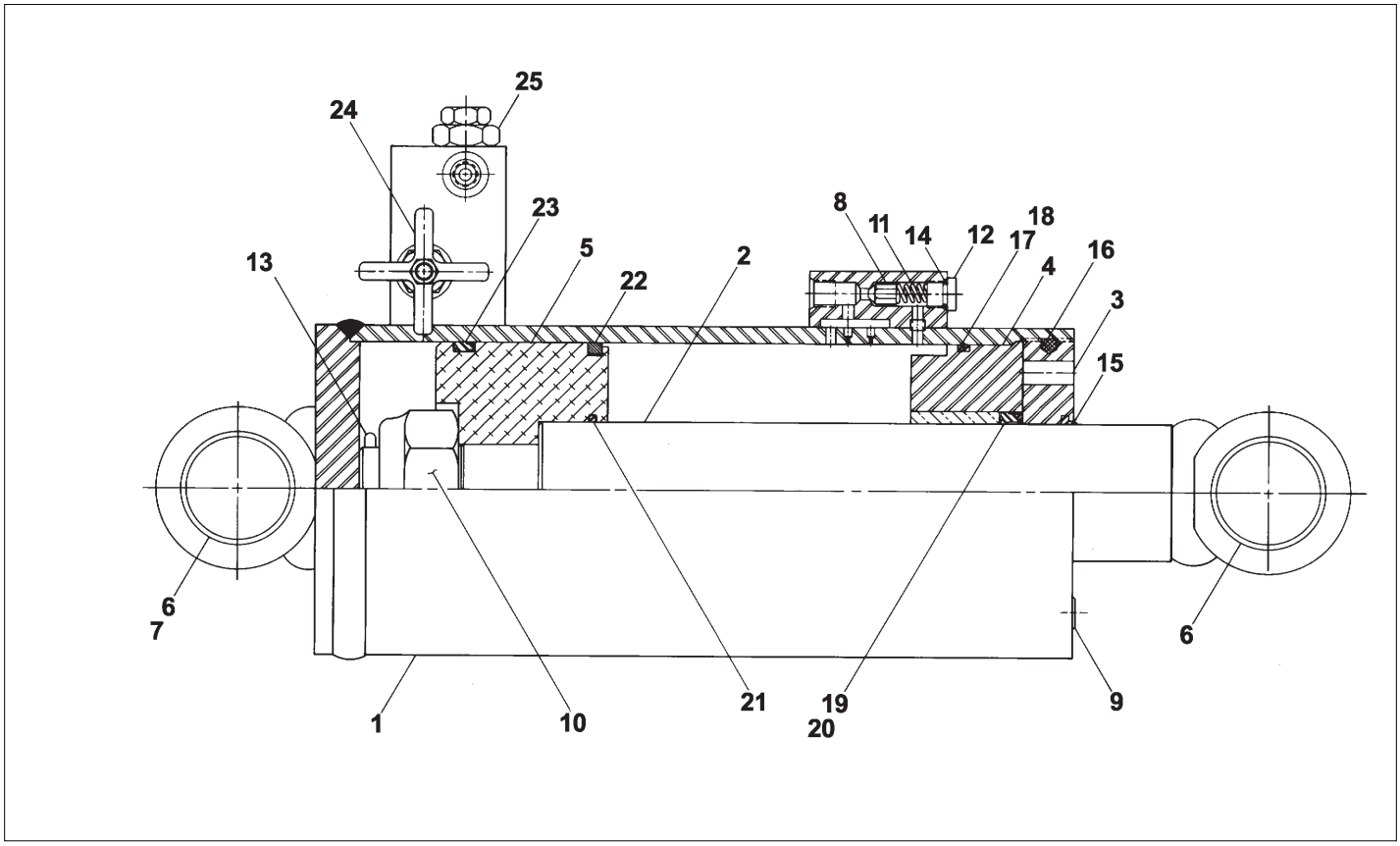

Courtesy of Crane.Market

Item	Part No.	Name	Qty	Uom
Not Shown	0080061	CYLINDER, LIFT GBI	1	EA
1	PNNA	TUBE	1	EA
2	8070247	ROD	1	EA
3	8070295	RETAINER	1	EA
4	8070220	BEARING	1	EA
5	8070217	PISTON	1	EA
6	2503628	BEARING	4	EA
7	8070030	BEARING SPACER	1	EA
8	8070012	POPPET	1	EA
9	8070014	PIPE PLUG	1	EA
10	8070218	NUT	1	EA
11	8070017	SPRING	1	EA
12	8070015	PORT PLUG	1	EA
Not Shown	0080615	SEAL REPAIR KIT	1	EA
13	PNNA	COTTER PIN – KIT ITEM	1	EA
14	PNNA	O-RING – KIT ITEM	1	EA
15	PNNA	WIPER – KIT ITEM	1	EA
16	PNNA	NYLON PLUG – KIT ITEM	1	EA
17	PNNA	O-RING – KIT ITEM	1	EA
18	PNNA	BACK-UP – KIT ITEM	1	EA
19	PNNA	U-RING – KIT ITEM	1	EA
20	PNNA	BACK-UP – KIT ITEM	1	EA
21	PNNA	O-RING – KIT ITEM	1	EA
22	PNNA	CAST IRON PISTON RING – KIT ITEM	1	EA
23	PNNA	QUAD SEAL – KIT ITEM	1	EA
24	6010115	CARTRIDGE NEEDLE VALVE	1	EA
25	6010116	CARTRIDGE HOLDING VALVE - (PRESET BY FACTORY, DO NOT RESET)	1	EA

Courtesy of Crane.Market

Item	Part No.	Name	Qty	Uom
Not Shown	0071918	SEAL REPAIR KIT	1	EA

Courtesy of Crane.Market

HYDRAULICS

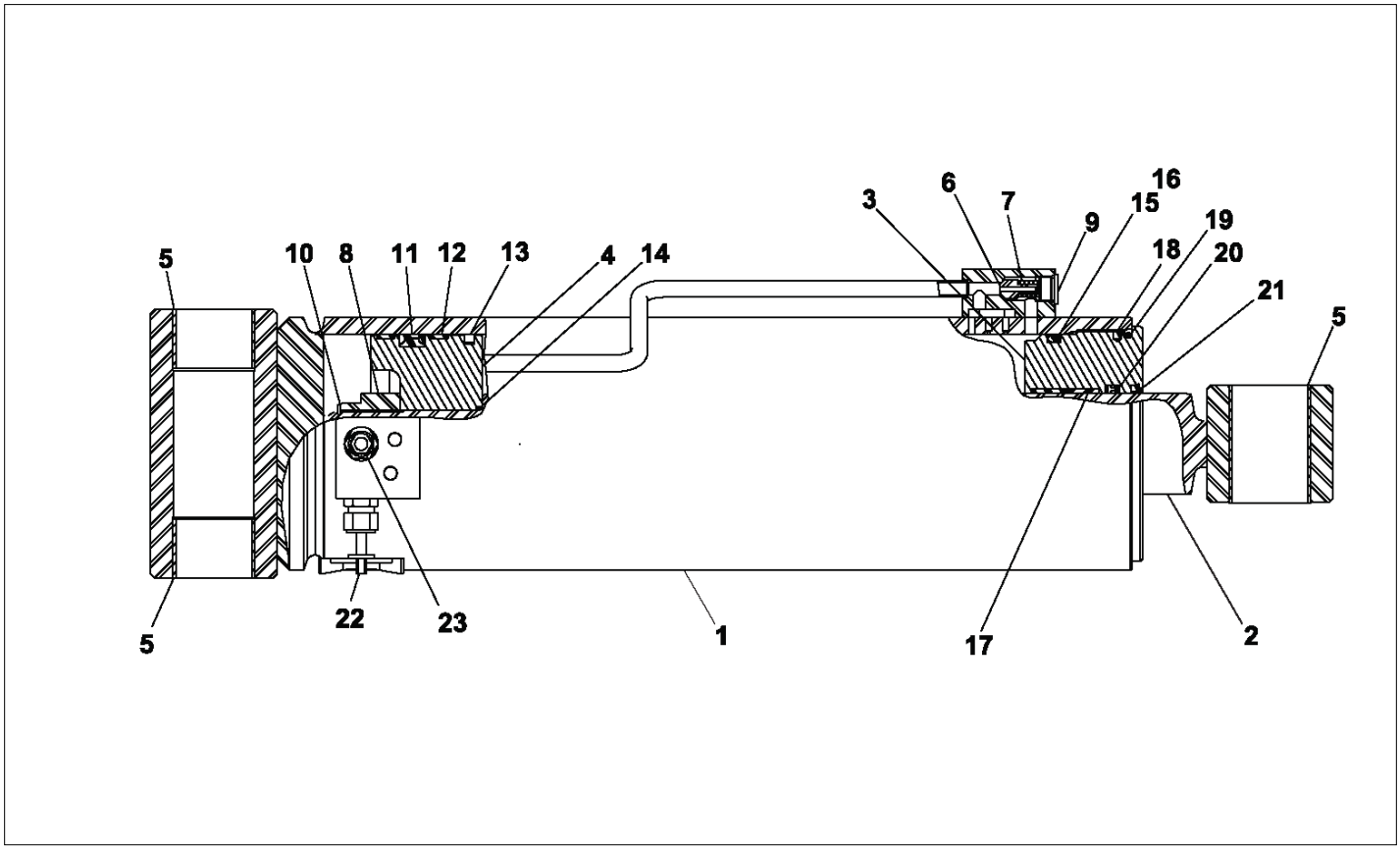

Courtesy of Crane.Market

Item	Part No.	Name	Qty	Uom
Not Shown	0083473	LIFT CYL	1	EA
1	PNNA	TUBE	1	EA
2	6091251	ROD	1	EA
3	6091250	PISTON	1	EA
4	6091249	PISTON	1	EA
5	2503628	BEARING	4	EA
6	6091241	POPPET	1	EA
7	6091246	SPRING	1	EA
8	6091252	LOCKING NUT	1	EA
9	5075306	HEX PLUG	1	EA
Not Shown	6091253	SEAL REPAIR KIT	1	EA
10	PNNA	SNAP RING – KIT ITEM	1	EA
11	PNNA	CAPPED T-SEAL – KIT ITEM	1	EA
12	PNNA	WEAR BAND – KIT ITEM	2	EA
13	PNNA	CAST IRON RING – KIT ITEM	1	EA
14	PNNA	O-RING – KIT ITEM	1	EA
15	PNNA	O-RING – KIT ITEM	1	EA
16	PNNA	BACK-UP – KIT ITEM	1	EA
17	PNNA	WEAR BAND – KIT ITEM	2	EA
18	PNNA	LOCKING INSERT – KIT ITEM	2	EA
19	PNNA	O-RING – KIT ITEM	1	EA
20	PNNA	DEEP Z-SEAL – KIT ITEM	1	EA
21	PNNA	ROD WIPER – KIT ITEM	1	EA
22	6010115	CARTRIDGE NEEDLE VALVE	1	EA
23	6091314	COUNTER BALANCE CARTRIDGE	1	EA

Courtesy of Crane.Market

HYDRAULICS

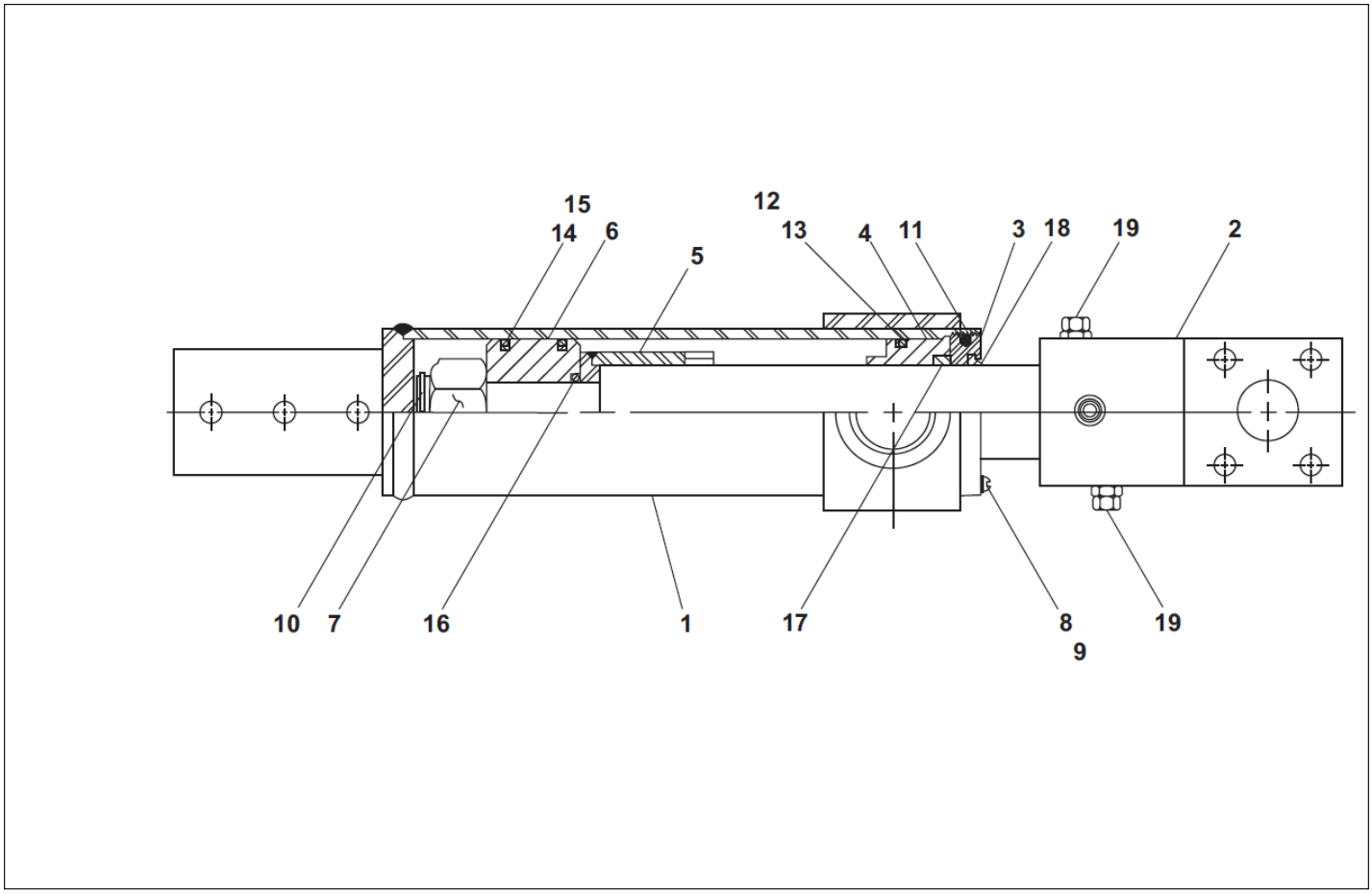

Courtesy of Crane.Market

Item	Part No.	Name	Qty	Uom
Not Shown	0080975	EXTENSION CYLINDER	1	EA
1	PNNA	TUBE	1	EA
2	8070296	ROD	1	EA
3	8070297	RETAINER	1	EA
4	8070298	BEARING	1	EA
5	8070299	SPACER	1	EA
6	8070131	PISTON	1	EA
7	8070018	NUT	1	EA
8	8070300	LOCK WASHER	1	EA
9	8070301	CAPSCREW	1	EA
Not Shown	0080473	SEAL REPAIR KIT	1	EA
10	PNNA	SNAP RING – KIT ITEM	1	EA
11	PNNA	NYLON PLUG – KIT ITEM	1	EA
12	PNNA	O-RING – KIT ITEM	1	EA
13	PNNA	BACK-UP – KIT ITEM	1	EA
14	PNNA	O-RING – KIT ITEM	2	EA
15	PNNA	TEFLON RING – KIT ITEM	2	EA
16	PNNA	O-RING – KIT ITEM	1	EA
17	PNNA	U-RING – KIT ITEM	1	EA
18	PNNA	WIPER – KIT ITEM	1	EA
19	6010116	CARTRIDGE HOLDING VALVE - (PRESET BY FACTORY, DO NOT RESET)	2	EA
Not Shown	0071918	SEAL REPAIR KIT	1	EA

Courtesy of Crane.Market

HYDRAULICS

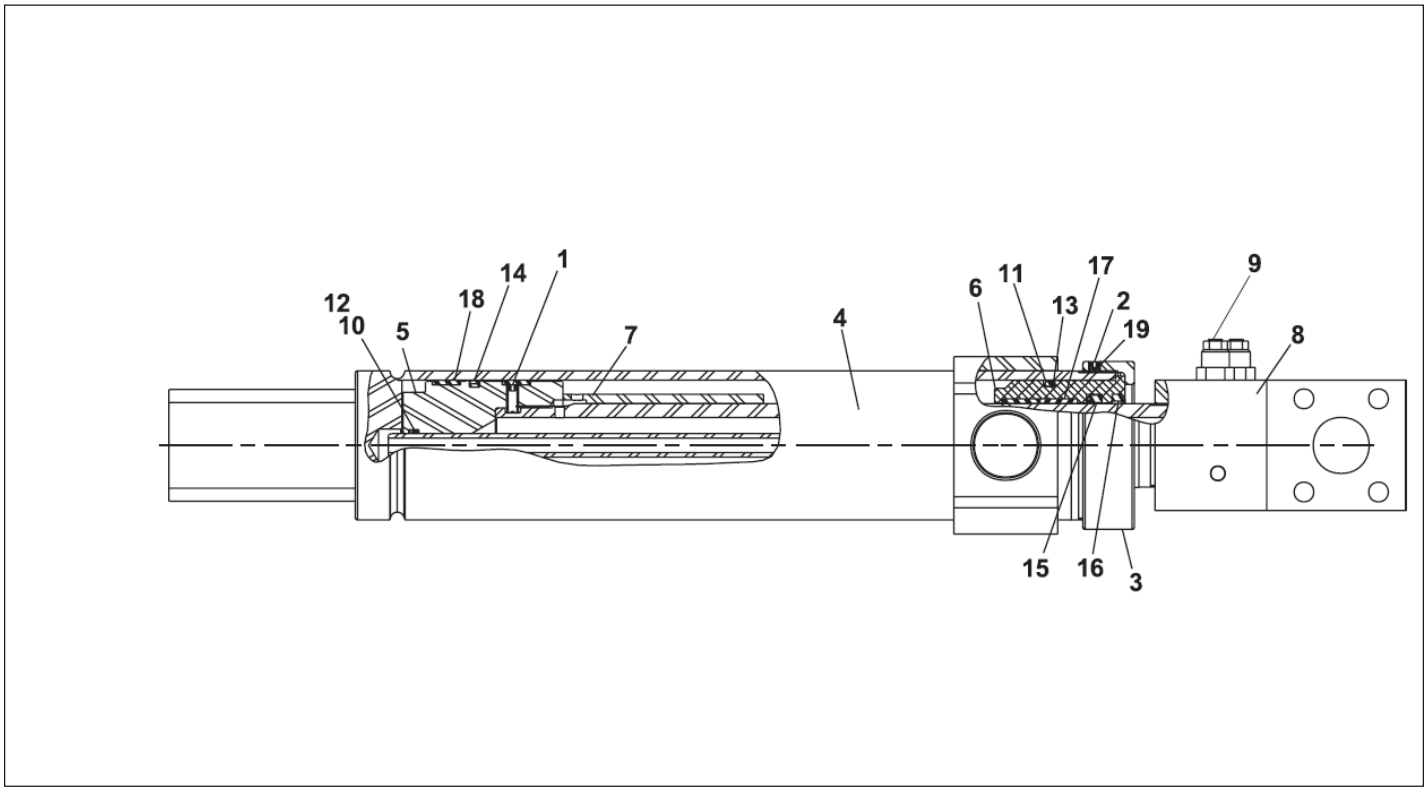

Courtesy of Crane.Market

Item	Part No.	Name	Qty	Uom
Not Shown	0083472	CYL 3.50 164.00 2.25 EXTEND	1	EA
1	975729	SET SCREW 5/16-18 X 3/4 INCH LONG	1	EA
2	5569835	SET SCREW 5/16-18 X 1/4 INCH LONG	1	EA
3	6091255	HEAD GLAND CAP	1	EA
4	PNNA	TUBE WELDMENT	1	EA
5	6091262	PISTON	1	EA
6	6091263	HEAD GLAND	1	EA
7	6091264	ROD SPACER	1	EA
8	6091265	ROD	1	EA
9	6091314	COUNTER BALANCE CARTRIDGE	2	EA
Not Shown	6091266	SEAL KIT	1	EA
10	PNNA	O-RING – KIT ITEM	1	EA
11	PNNA	O-RING – KIT ITEM	1	EA
12	PNNA	BACK-UP – KIT ITEM	2	EA
13	PNNA	BACK-UP – KIT ITEM	1	EA
14	PNNA	DISO-PAC – KIT ITEM	1	EA
15	PNNA	U-CUP – KIT ITEM	1	EA
16	PNNA	ROD WIPER – KIT ITEM	1	EA
17	PNNA	WEAR BAND – KIT ITEM	2	EA
18	PNNA	WEAR BAND – KIT ITEM	2	EA
19	PNNA	LOCKING INSERT – KIT ITEM	1	EA

Courtesy of Crane.Market

HYDRAULICS

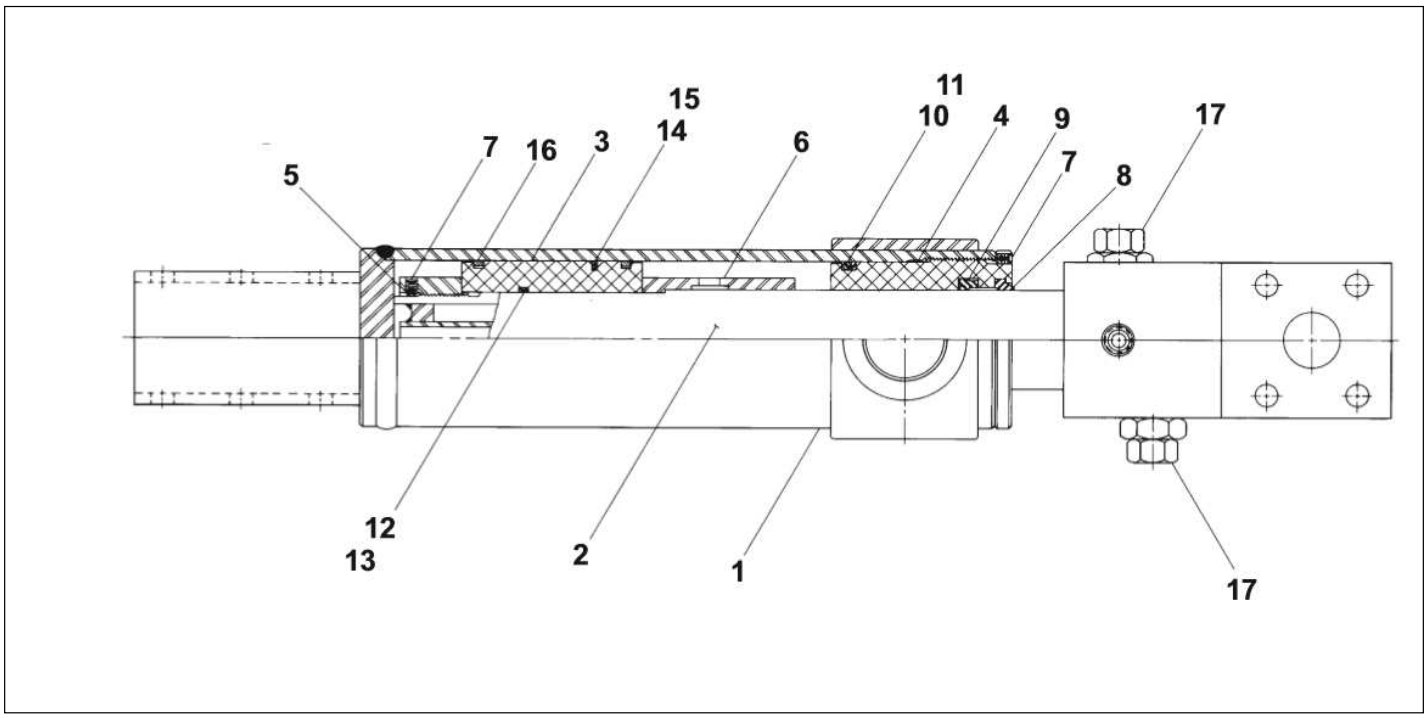

Courtesy of Crane.Market

Item	Part No.	Name	Qty	Uom
Not Shown	0080975	EXTENSION CYLINDER	1	EA
1	PNNA	CASE	1	EA
2	8190126	ROD	1	EA
3	8190103	PISTON	1	EA
4	8190098	HEAD GLAND	1	EA
5	8190127	PISTON RING NUT	1	EA
6	8190128	SPACER	1	EA
7	8190129	SET SCREW	3	EA
Not Shown	0073286	SEAL REPAIR KIT	1	EA
8	PNNA	WIPER – KIT ITEM	1	EA
9	PNNA	U-CUP – KIT ITEM	1	EA
10	PNNA	O-RING – KIT ITEM	1	EA
11	PNNA	BACK-UP – KIT ITEM	1	EA
12	PNNA	O-RING – KIT ITEM	1	EA
13	PNNA	BACK-UP – KIT ITEM	2	EA
14	PNNA	PISTON SEAL – KIT ITEM	1	EA
15	PNNA	O-RING – KIT ITEM	1	EA
16	6090037	CAST IRON PISTON RING	1	EA
17	6010116	CARTRIDGE HOLDING VALVE - (PRESET BY FACTORY, DO NOT RESET)	2	EA
Not Shown	0071918	SEAL REPAIR KIT	1	EA

Courtesy of Crane.Market

HYDRAULICS

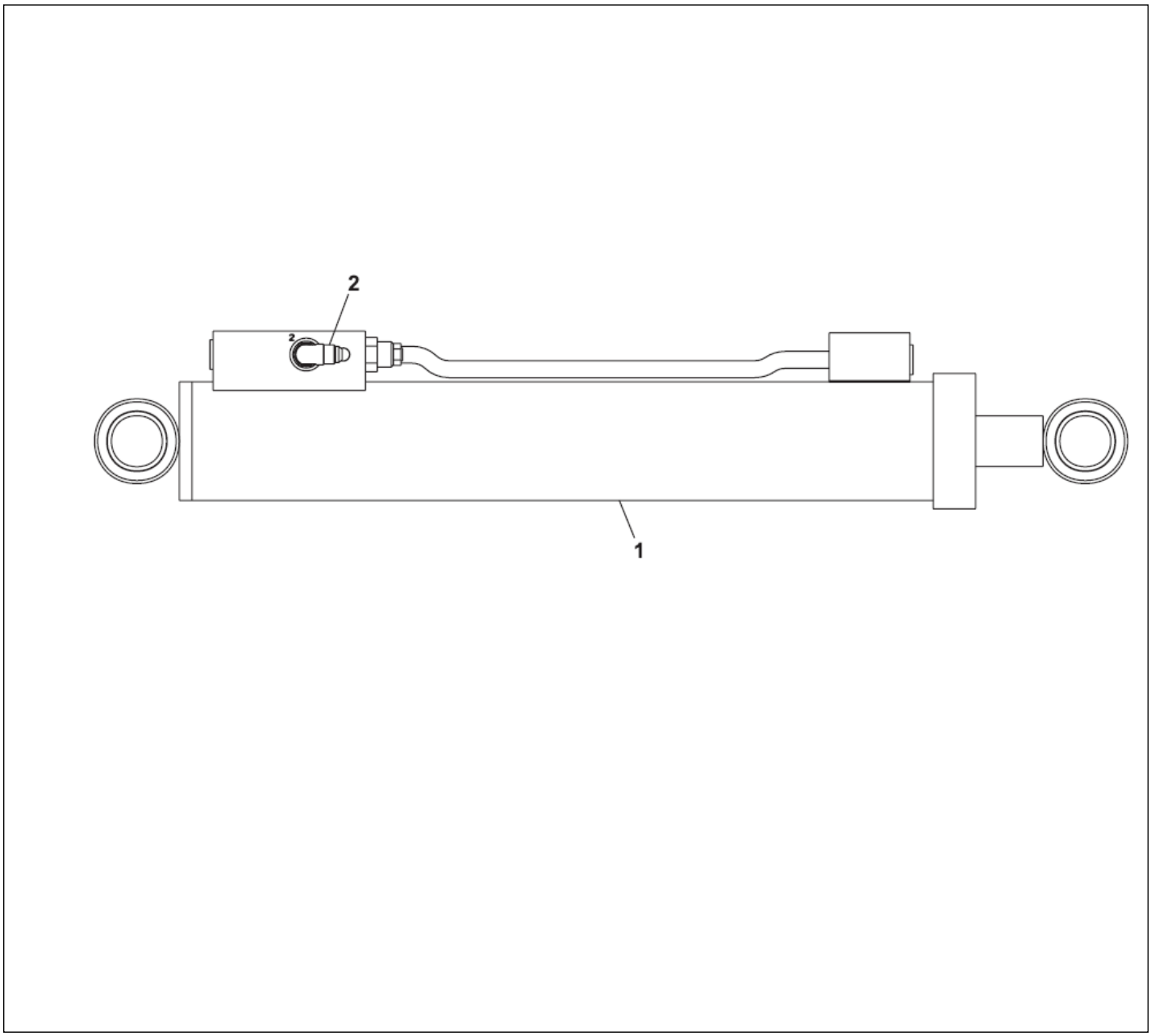

Courtesy of Crane.Market

Item	Part No.	Name	Qty	Uom
1	0191811	CYL 3.00 15.69 1.50 JIB 100GP0059-2	1	EA
2	5035305	FTG ELB90STRTHD-6B-6S STL	2	EA

Courtesy of Crane.Market

HYDRAULICS

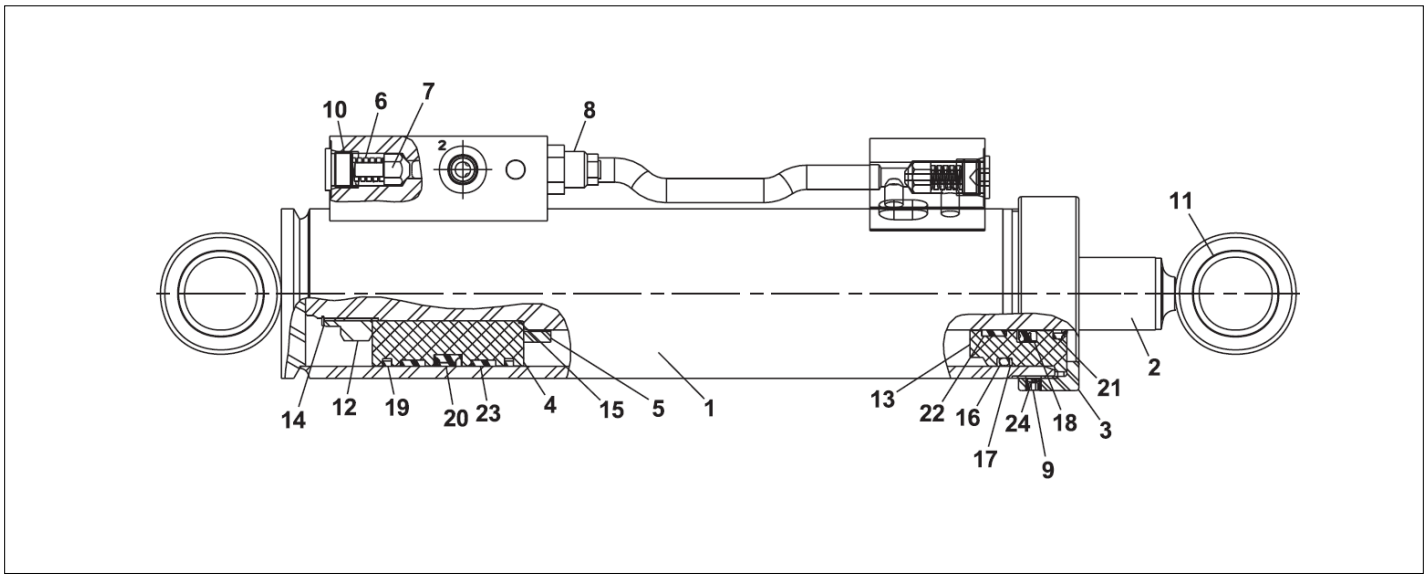

Courtesy of Crane.Market

Item	Part No.	Name	Qty	Uom
Not Shown	0191811	CYL 3.00 15.69 1.50 JIB 100GP0059-2	1	EA
1	PNNA	TUBE	1	EA
2	6091292	ROD	1	EA
3	6091288	HEAD GLAND CAP	1	EA
4	6091289	PISTON	1	EA
5	6091291	ROD SPACER	1	EA
6	6091246	SPRING	2	EA
7	6091241	POPPET	2	EA
8	6010794	CARTRIDGE HOLDING VALVE	1	EA
Not Shown	0150563	SEAL REPAIR KIT	1	EA
9	5569835	SET SCREW 5/16-18 X 1/4 INCH LONG	1	EA
10	5075306	HEX PLUG	2	EA
11	2502229	BEARING	4	EA
12	6091293	LOCKING NUT 1-1/4-12	1	EA
13	6091311	HEAD GLAND	1	EA
Not Shown	6091294	SEAL REPAIR KIT	1	EA
14	PNNA	SNAP RING – KIT ITEM	1	EA
15	PNNA	O-RING – KIT ITEM	1	EA
16	PNNA	O-RING – KIT ITEM	1	EA
17	PNNA	BACK-UP – KIT ITEM	1	EA
18	PNNA	DEEP Z-SEAL – KIT ITEM	1	EA
19	PNNA	CAST IRON RING – KIT ITEM	2	EA
20	PNNA	CAPPED T-SEAL – KIT ITEM	1	EA
21	PNNA	ROD WIPER – KIT ITEM	1	EA
22	PNNA	WEAR BAND – KIT ITEM	1	EA
23	PNNA	WEAR BAND – KIT ITEM	2	EA
24	PNNA	LOCKING INSERT – KIT ITEM	1	EA

Courtesy of Crane.Market

HYDRAULICS

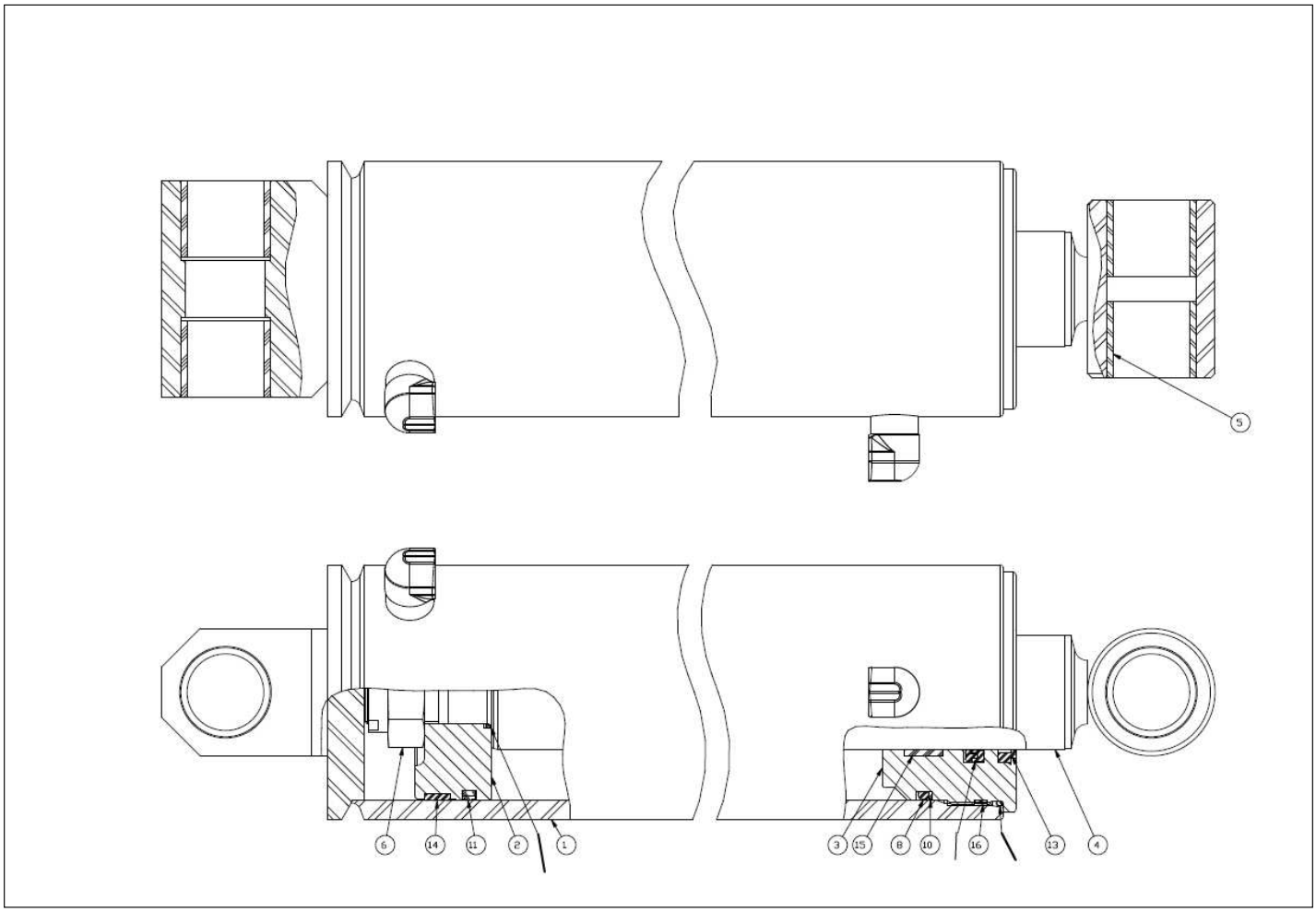

Courtesy of Crane.Market

Item	Part No.	Name	Qty	Uom
Not Shown	0083694	CYL 2.50 9.50 1.00 LEVEL	1	EA
1	2502229	BEARING	4	EA
2	6091282	.75-16 UNF LOCKNUT	1	EA
3	6091331	PISTON	1	EA
4	6091336	HEAD GLAND-RMT	1	EA
5	6091418	TUBE WELDMENT-RMT	1	EA
6	6091419	ROD WELDMENT	1	EA
7	6091420	ROD SPACER	1	EA
Not Shown	6091333	SEAL REPAIR KIT	1	EA
8	PNNA	EXT. SNAP RING – KIT ITEM	1	EA
9	PNNA	O-RING – KIT ITEM	1	EA
10	PNNA	O-RING – KIT ITEM	1	EA
11	PNNA	O-RING – KIT ITEM	1	EA
12	PNNA	BACKUP RING – KIT ITEM	2	EA
13	PNNA	BACKUP RING – KIT ITEM	1	EA
14	PNNA	DEEP Z-SEAL – KIT ITEM	1	EA
15	PNNA	CAPPED T-SEAL – KIT ITEM	1	EA
16	PNNA	HD ROD WIPER, SEALED OD – KIT ITEM	1	EA
17	PNNA	WEARBAND – KIT ITEM	1	EA
18	PNNA	LOCKING INSERT – KIT ITEM	1	EA

Courtesy of Crane.Market

HYDRAULICS

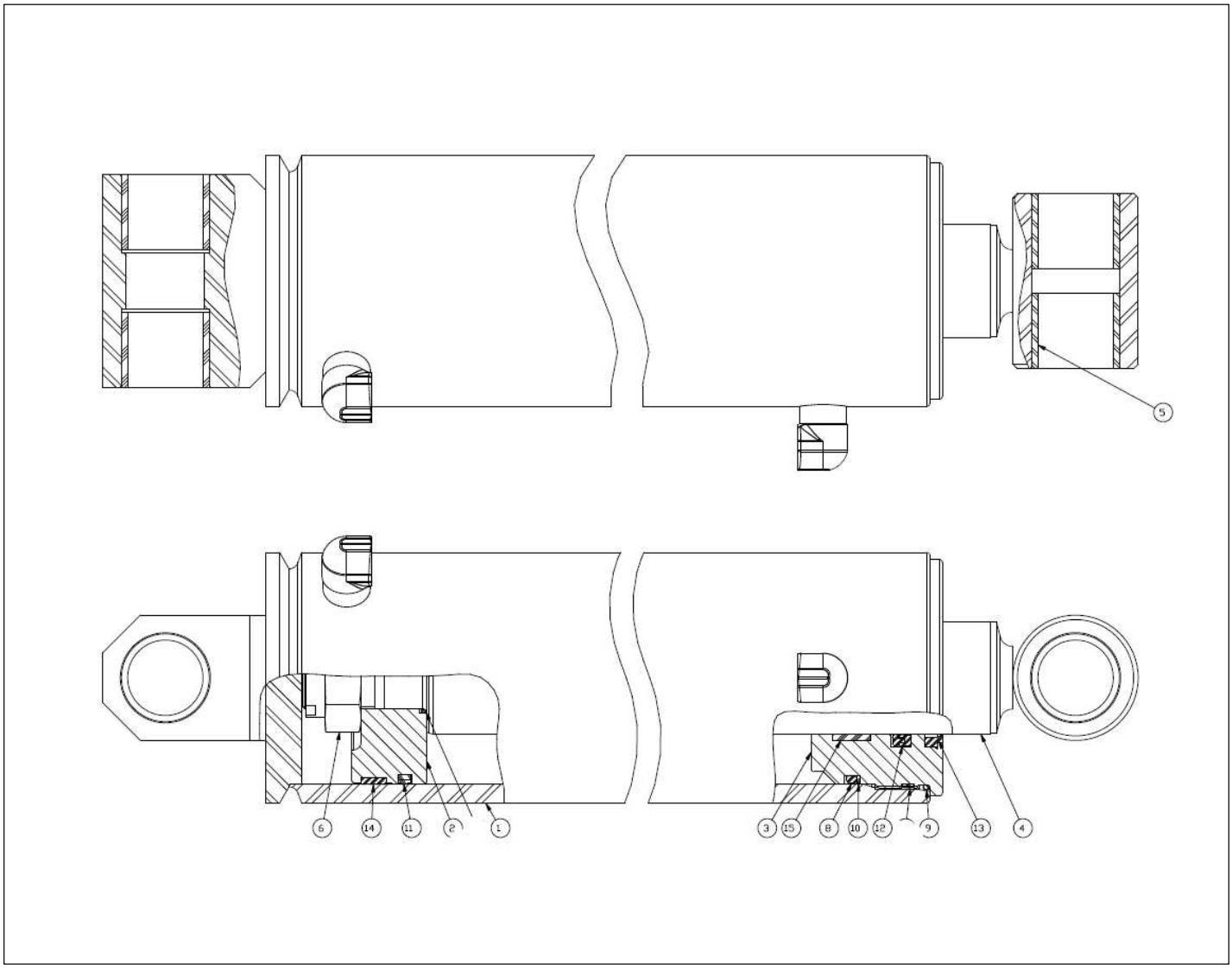

Courtesy of Crane.Market

Item	Part No.	Name	Qty	Uom
Not Shown	6047152	SEAL KIT	1	EA
1	6047157	TUBE WELDMENT	1	EA
2	6047158	PISTON	1	EA
3	6047159	HEAD GLAND	1	EA
4	6047160	ROD WELDMENT	1	EA
5	6047161	GARMAX JOURNAL BEARING	4	EA
6	6047162	1.250-12 UNF COLLAR LOCKNUT	1	EA
Not Shown	6047156	SEAL KIT	1	EA
7	PNNA	O-RING – KIT ITEM	1	EA
8	PNNA	O-RING – KIT ITEM	1	EA
9	PNNA	O-RING – KIT ITEM	1	EA
10	PNNA	BACKUP RING – KIT ITEM	1	EA
11	PNNA	DISO-PAC – KIT ITEM	1	EA
12	PNNA	DEEP Z-SEAL – KIT ITEM	1	EA
13	PNNA	HD ROD WIPER, SEALED OD – KIT ITEM	1	EA
14	PNNA	WEARBAND – KIT ITEM	1	EA
15	PNNA	PRECISION WEARBAND – KIT ITEM	1	EA
16	PNNA	LOCKING INSERT – KIT ITEM	2	EA

Courtesy of Crane.Market

HYDRAULICS

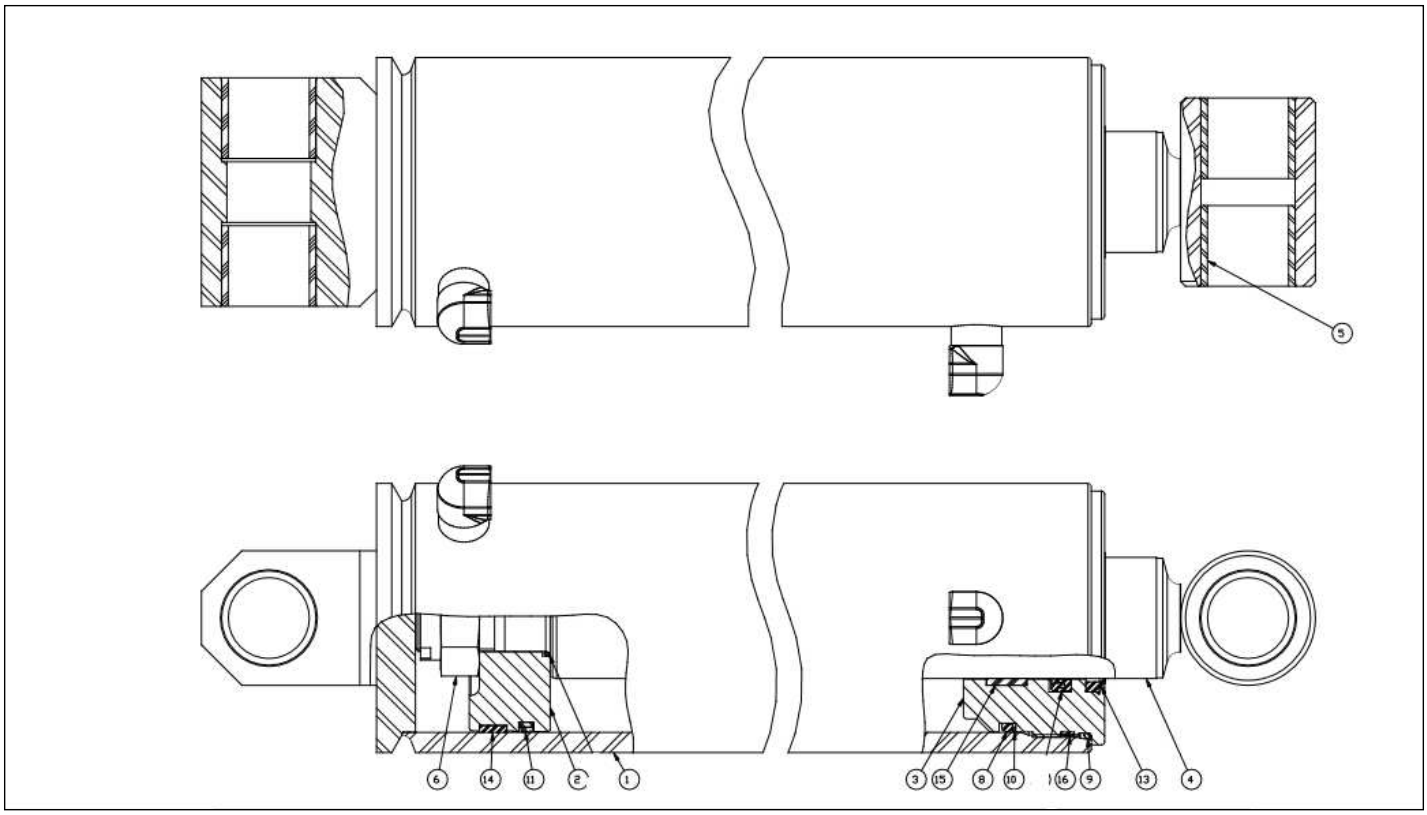

Courtesy of Crane.Market

Item	Part No.	Name	Qty	Uom
Not Shown	6047152	SEAL KIT	1	EA
1	6047157	TUBE WELDMENT	1	EA
2	6047158	PISTON	1	EA
3	6047159	HEAD GLAND	1	EA
4	6047160	ROD WELDMENT	1	EA
5	6047161	GARMAX JOURNAL BEARING	4	EA
6	6047162	1.250-12 UNF COLLAR LOCKNUT	1	EA
Not Shown	6047156	SEAL KIT	1	EA
7	PNNA	O-RING – KIT ITEM	1	EA
8	PNNA	O-RING – KIT ITEM	1	EA
9	PNNA	O-RING – KIT ITEM	1	EA
10	PNNA	BACKUP RING – KIT ITEM	1	EA
11	PNNA	DISO-PAC – KIT ITEM	1	EA
12	PNNA	DEEP Z-SEAL – KIT ITEM	1	EA
13	PNNA	HD ROD WIPER, SEALED OD – KIT ITEM	1	EA
14	PNNA	WEARBAND – KIT ITEM	1	EA
15	PNNA	PRECISION WEARBAND – KIT ITEM	1	EA
16	PNNA	LOCKING INSERT – KIT ITEM	2	EA

Courtesy of Crane.Market

HYDRAULICS

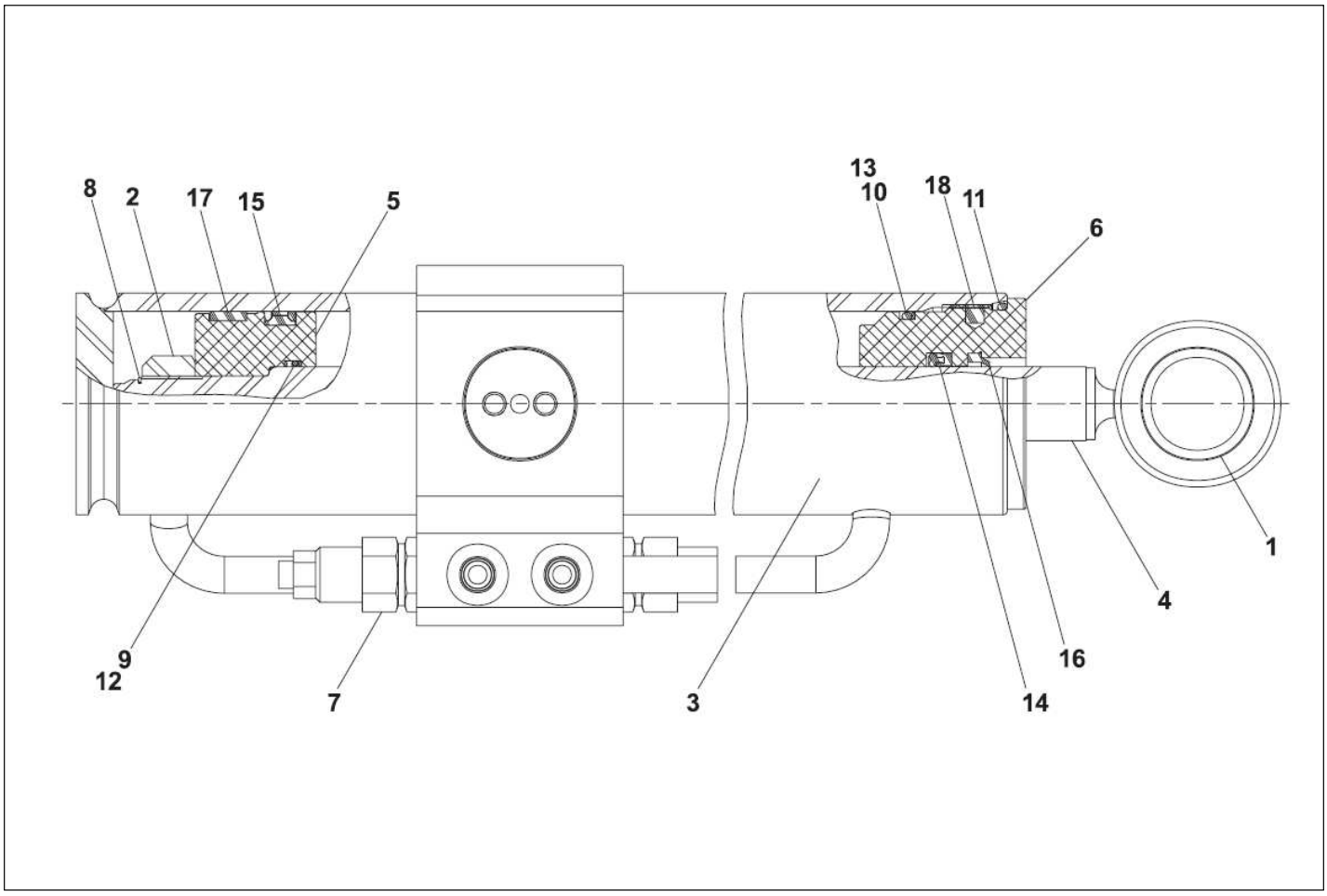

Courtesy of Crane.Market

Item	Part No.	Name	Qty	Uom
Not Shown	0181914	SLAVE CYL 2.50 7.69 1.00	1	EA
1	2500026	BEARING	2	EA
2	6091282	.75-16 UNF LOCKNUT	1	EA
3	PNNA	TUBE	1	EA
4	6091330	ROD	1	EA
5	6091331	PISTON	1	EA
6	6091332	HEAD GLAND	1	EA
7	6091335	COUNTERBALANCE HOLDING VALVE	2	EA
Not Shown	6091313	SEAL REPAIR KIT	1	EA
8	PNNA	SNAP RING – KIT ITEM	1	EA
9	PNNA	O-RING – KIT ITEM	1	EA
10	PNNA	O-RING – KIT ITEM	1	EA
11	PNNA	O-RING – KIT ITEM	1	EA
12	PNNA	BACKUP RING – KIT ITEM	2	EA
13	PNNA	BACKUP RING – KIT ITEM	1	EA
14	PNNA	DEEP Z-SEAL – KIT ITEM	1	EA
15	PNNA	CAPPED T-SEAL – KIT ITEM	1	EA
16	PNNA	ROD WIPER – KIT ITEM	1	EA
17	PNNA	WEAR BAND – KIT ITEM	1	EA
18	PNNA	LOCKING INSERT – KIT ITEM	1	EA

Courtesy of Crane.Market

HYDRAULICS

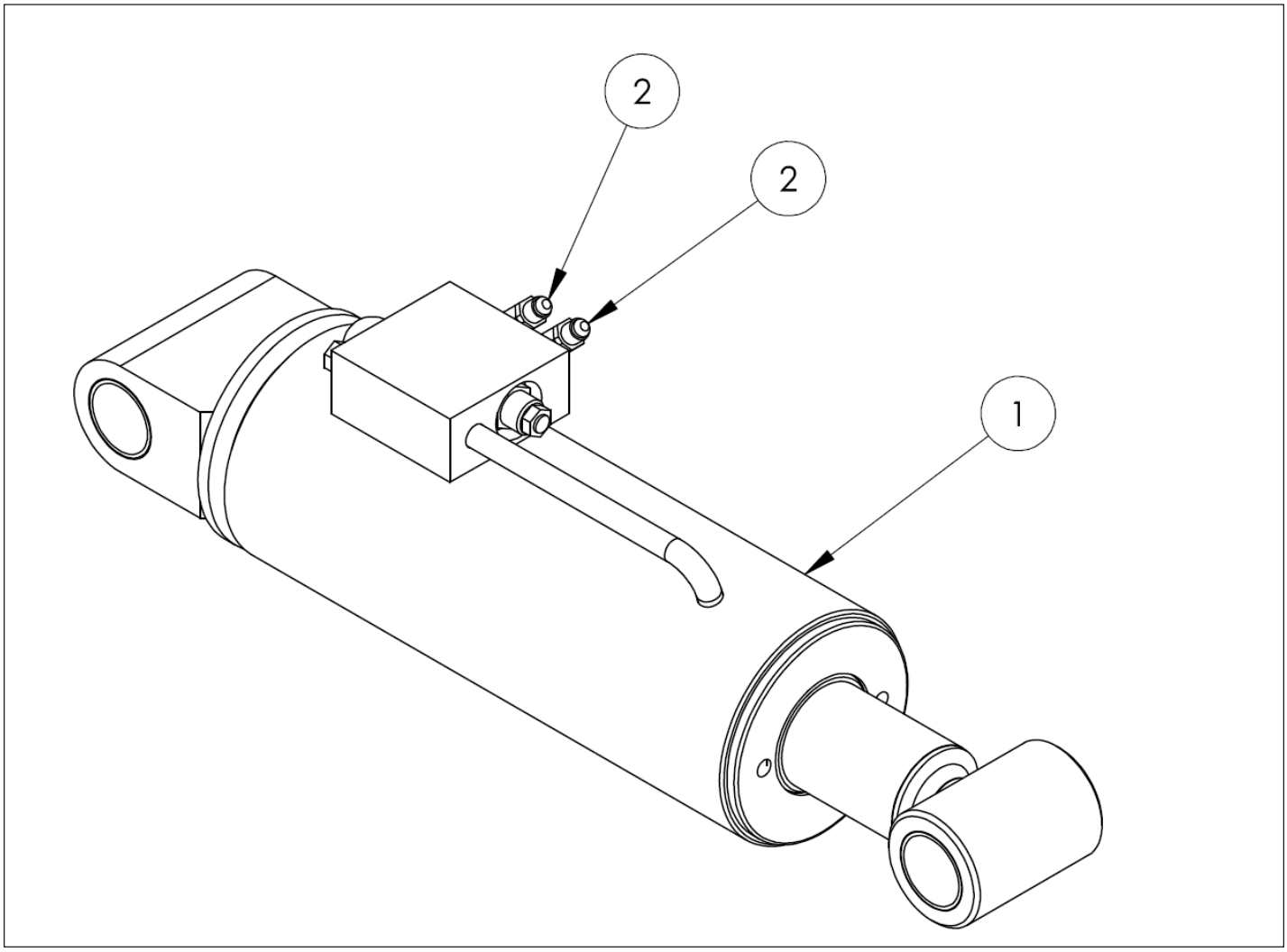

Courtesy of Crane.Market

Item	Part No.	Name	Qty	Uom
1	6047153	CYLINDER SLAVE LEVEL	1	EA
2	5035318	FTG. ELB90STRTHD-6B-4S	2	EA

Courtesy of Crane.Market

HYDRAULICS

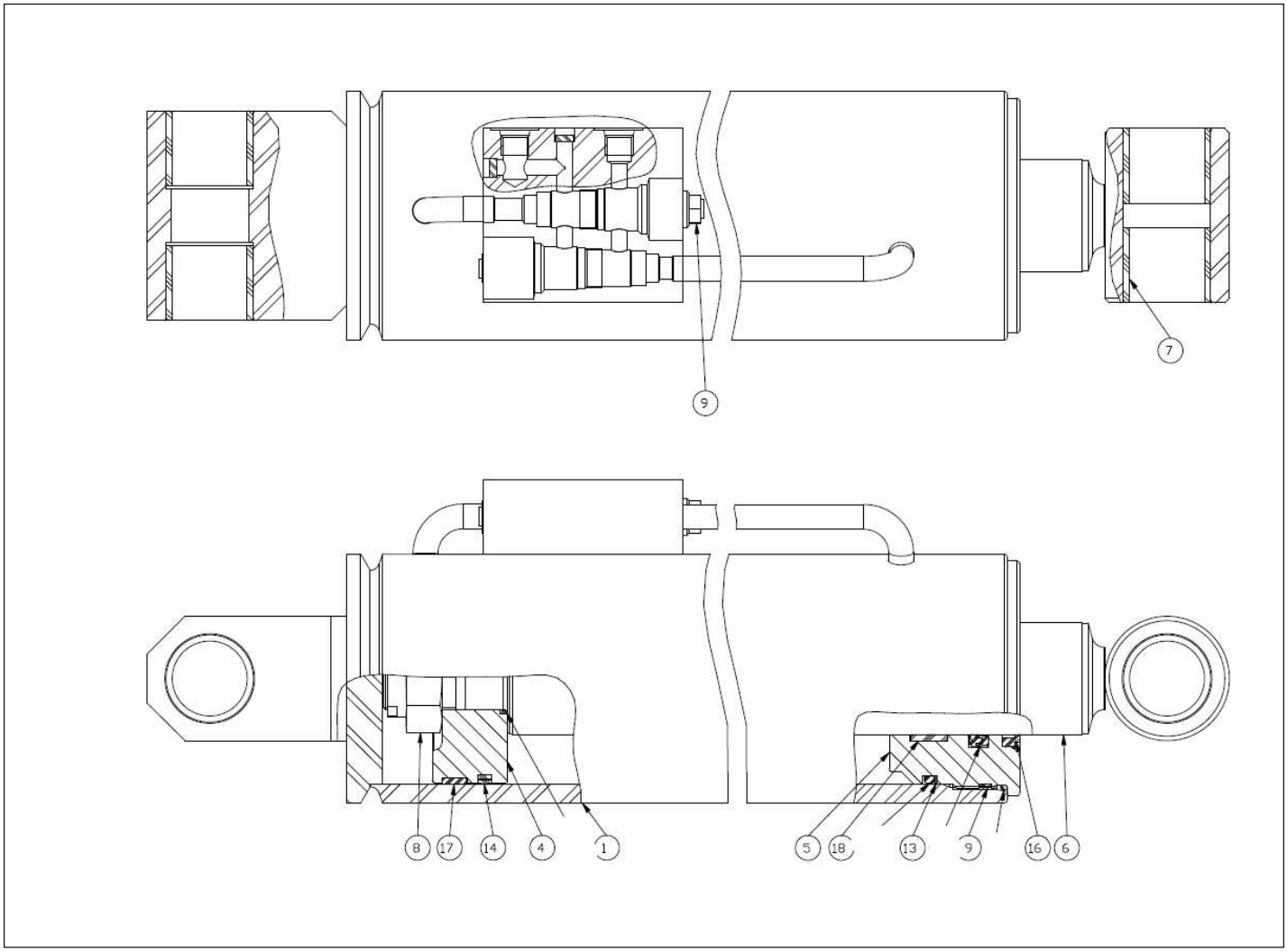

Courtesy of Crane.Market

Item	Part No.	Name	Qty	Uom
Not Shown	6047153	CYLINDER SLAVE LEVEL	1	EA
1	6047164	TUBE WELDMENT	1	EA
2	PNNA	.375 DIA. WELD PLUG	2	EA
3	PNNA	EXTERNAL CAVITY BLOCK	1	EA
4	6047158	PISTON	1	EA
5	6047159	HEAD GLAND	1	EA
6	6047166	ROD WELDMENT	1	EA
7	6047161	GARMAX JOURNAL BEARING	4	EA
8	6047162	1.250-12 UNF COLLAR LOCKNUT	1	EA
9	6019068	COUNTER BALANCE CARTRIDGE	2	EA
Not Shown	6047156	SEAL KIT	1	EA
10	PNNA	O-RING – KIT ITEM	1	EA
11	PNNA	O-RING – KIT ITEM	1	EA
12	PNNA	O-RING – KIT ITEM	1	EA
13	PNNA	BACKUP RING – KIT ITEM	1	EA
14	PNNA	DISO-PAC – KIT ITEM	1	EA
15	PNNA	DEEP Z-SEAL – KIT ITEM	1	EA
16	PNNA	HD ROD WIPER, SEALED OD – KIT ITEM	1	EA
17	PNNA	WEARBAND – KIT ITEM	1	EA
18	PNNA	PRECISION WEARBAND – KIT ITEM	1	EA
19	PNNA	LOCKING INSERT – KIT ITEM	2	EA

Courtesy of Crane.Market

HYDRAULICS

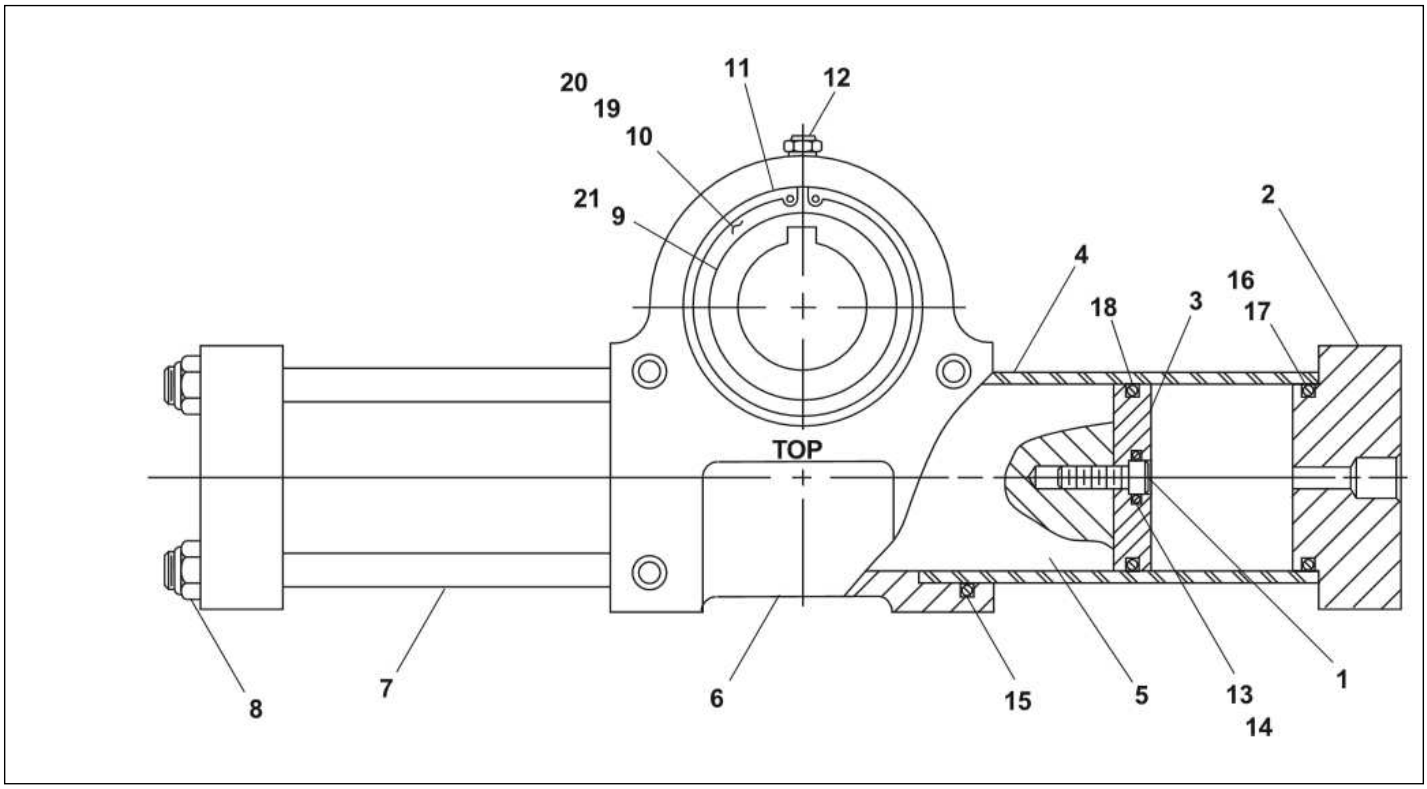

Courtesy of Crane.Market

Item	Part No.	Name	Qty	Uom
Not Shown	0110771	PLATFORM ROTATOR, PARKER	1	EA
1	8080018	RACK BOLT	2	EA
2	8080016	END CAP	2	EA
3	8080015	PISTON	2	EA
4	8080040	CYLINDER	2	EA
5	8080060	RACK	1	EA
6	8080039	HOUSING	1	EA
7	0073281	TIE ROD	8	EA
8	8080041	LOCK NUT	8	EA
9	8080061	PINION	1	EA
10	8080038	PINION BUSHING	2	EA
11	8080062	SNAP RING	2	EA
12	8080064	RELIEF VALVE	1	EA
Not Shown	0071275	SEAL REPAIR KIT	1	EA
13	PNNA	O-RING – KIT ITEM	2	EA
14	PNNA	PARBAT SEAL – KIT ITEM	2	EA
15	PNNA	O-RING – KIT ITEM	2	EA
16	PNNA	O-RING – KIT ITEM	2	EA
17	PNNA	PARBAT SEAL – KIT ITEM	2	EA
18	PNNA	POLYPAK SEAL – KIT ITEM	2	EA
19	PNNA	O-RING – KIT ITEM	2	EA
20	PNNA	PARBAT SEAL – KIT ITEM	2	EA
21	PNNA	O-RING – KIT ITEM	1	EA

Courtesy of Crane.Market

HYDRAULICS

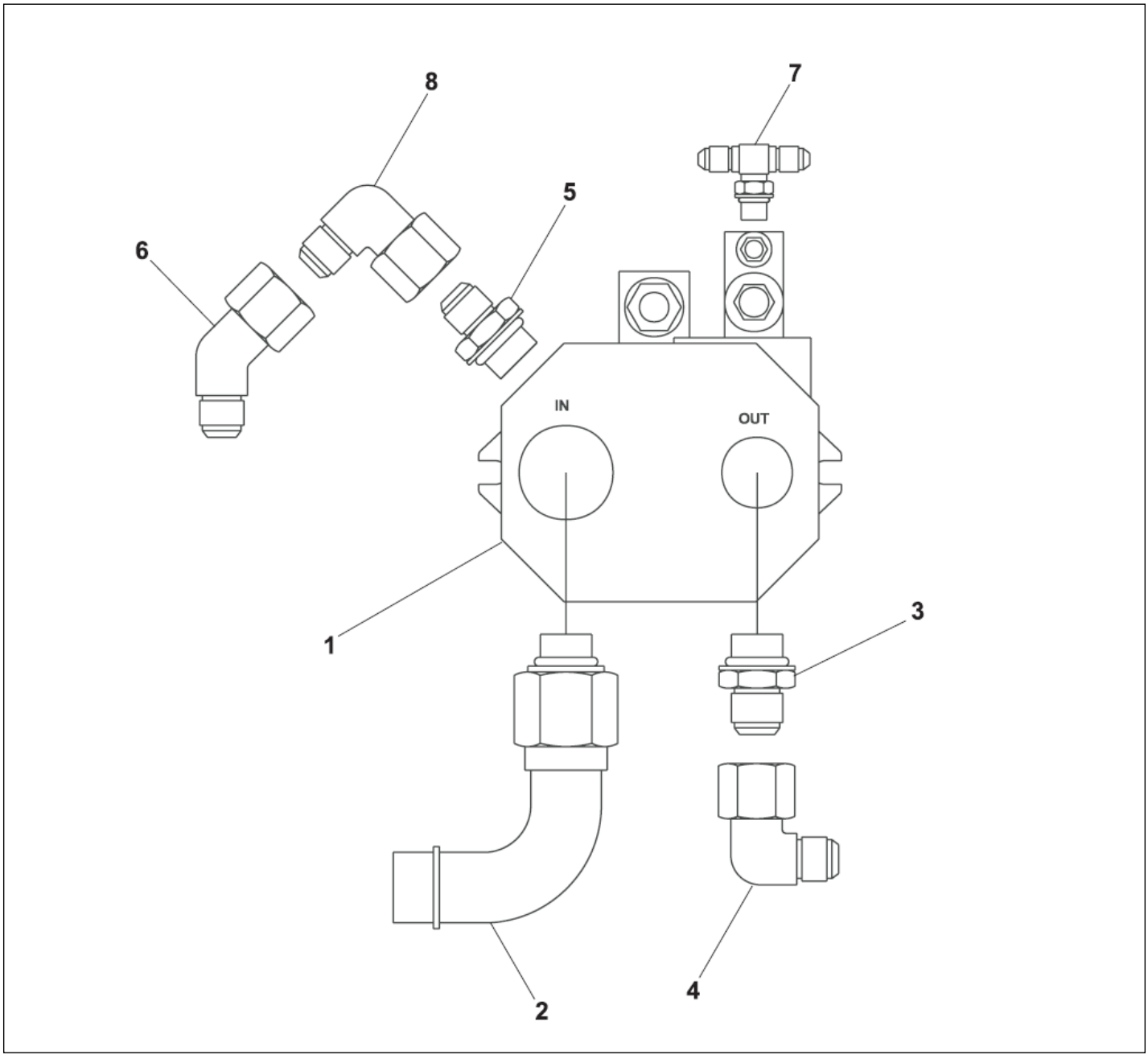

Courtesy of Crane.Market

Item	Part No.	Name	Qty	Uom
1	6020065	HYDRAULIC PUMP - (PUMP COMPENSATOR IS NOT PRESET)	1	EA
Not Shown	8220119	SEAL REPAIR KIT	1	EA
Not Shown	8220120	REPLACEMENT COMPENSATOR	1	EA
Not Shown	8220088	GASKET	1	EA
2	5038005	BEADED 90° ELBOW	1	EA
3	5065718	FTG ADPTR STRTHD-16B-16S STL	1	EA
4	5037010	FTG ELB90SWVL-16S-16S STL	1	EA
5	5065710	FTG ADPTR STRTHD-10B-8S STL	1	EA
6	5037006	FTG ELB90SWVL-8S-8S STL	1	EA
7	5036503	STRAIGHT THREAD BRANCH TEE	1	EA
8	5036906	FTG ELB45SWVL-8S-8S STL	1	EA

Courtesy of Crane.Market

HYDRAULICS

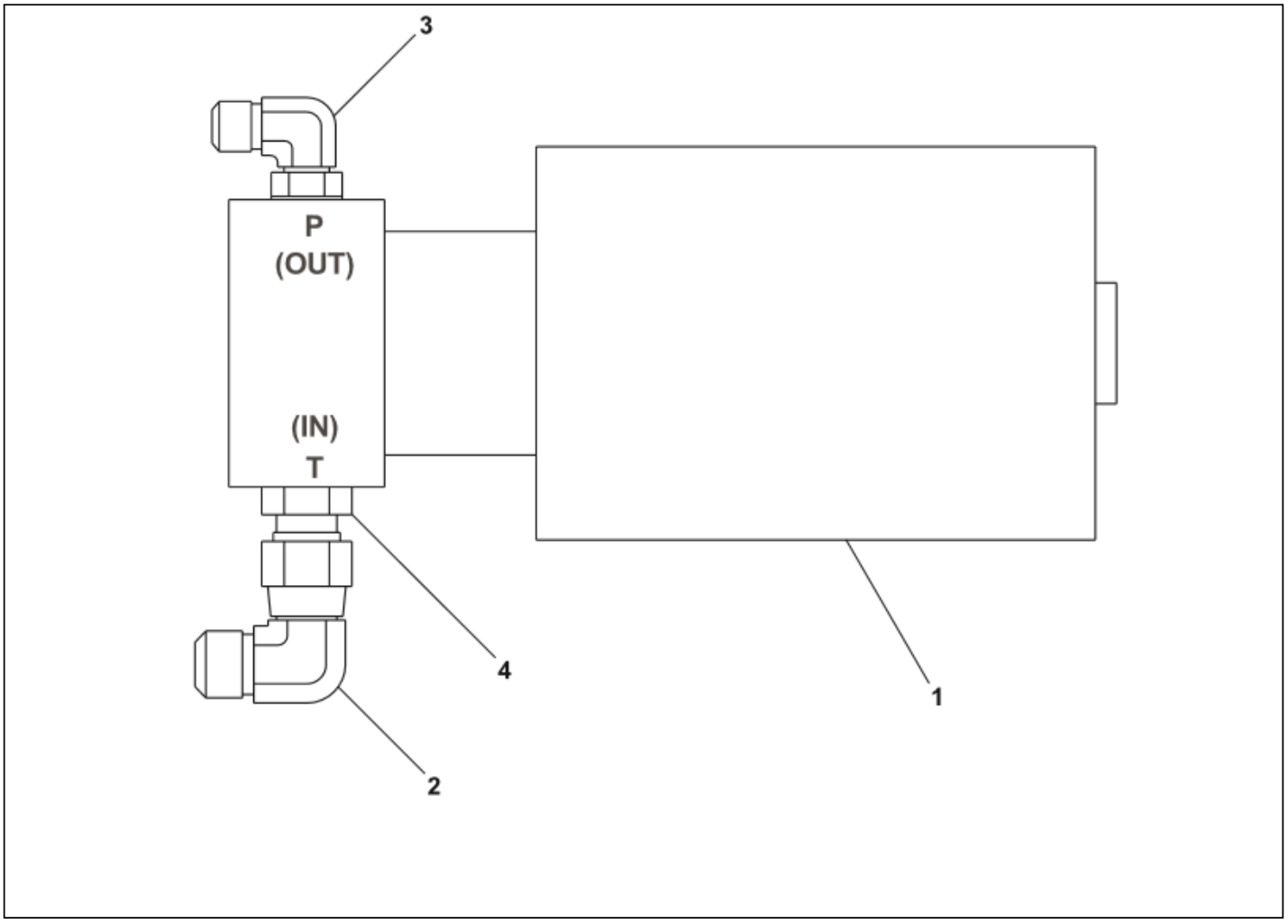

Courtesy of Crane.Market

Item	Part No.	Name	Qty	Uom
1	6020058	EMERGENCY POWER MOTOR/PUMP	1	EA
2	5037006	FTG ELB90SWVL-8S-8S STL	1	EA
3	5035305	FTG ELB90STRTHD-6B-6S STL	1	EA
4	5065709	ADAPTER STRAIGHT -8SAE TO -8JIC	1	EA

Courtesy of Crane.Market

HYDRAULICS

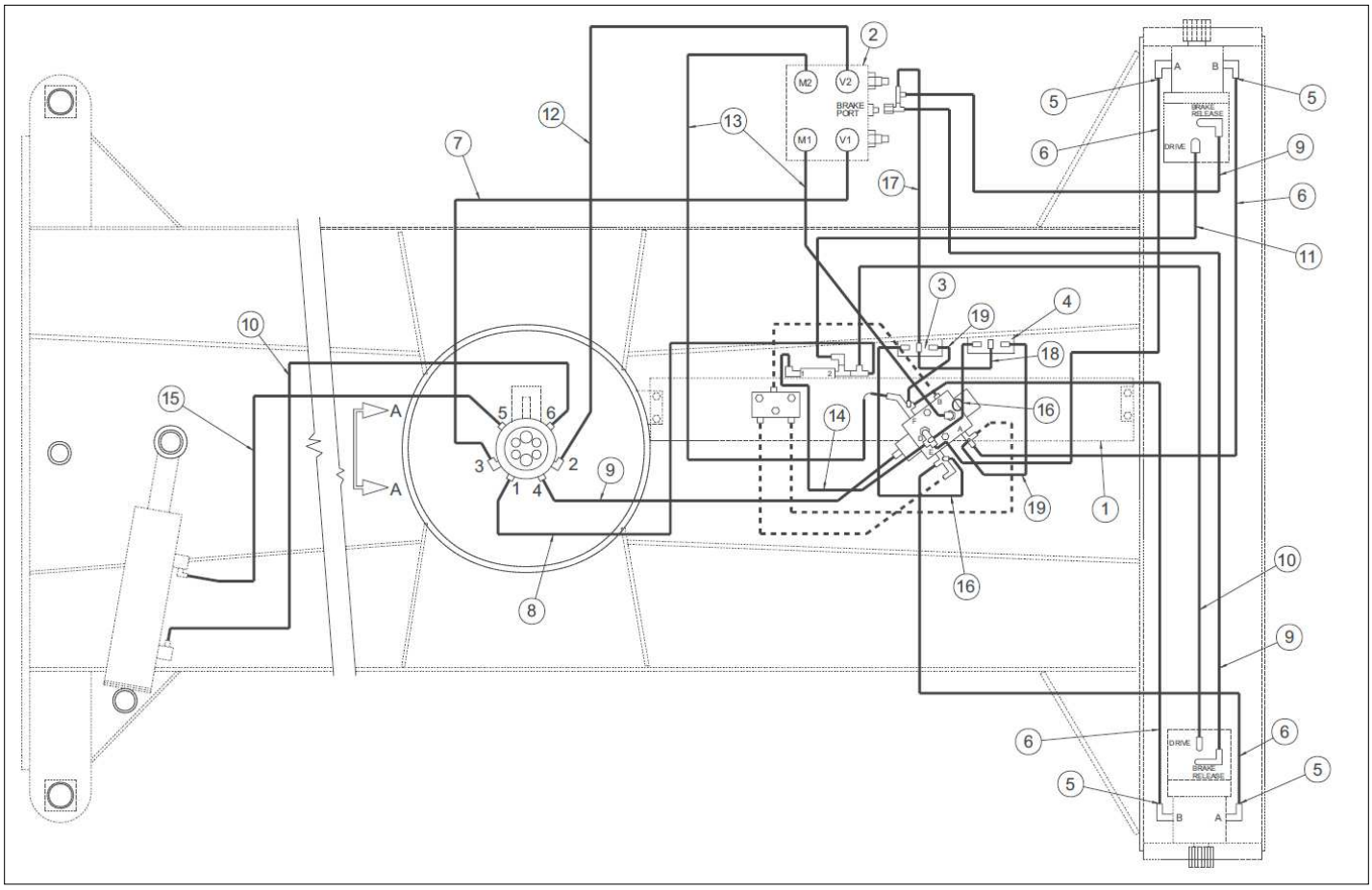

Courtesy of Crane.Market

Item	Part No.	Name	Qty	Uom
1	0081423	DRIVE VALVE, HIGH TORQUE	1	EA
2	0081042	MOTION CONTORL VALVE SUB-ASSY	1	EA
3	0081600	DRIVE SEQUENCE VALVE SUB-ASSY RH	1	EA
4	0081604	DRIVE SEQUENCE VALVE SUB-ASSY LH	1	EA
5	5080015	3/4 ID HOSE ASSY (-12)	4	EA
6	0080543	3/4 ID HOSE ASSY	4	EA
7	0400483	3/47 ID HOSE ASSY	1	EA
8	0080522	HOSE- -8-8S-8S 42 100R2	1	EA
9	0070772	HOSE -4-4S-4S 54 100R2	3	EA
10	0070783	1/4 ID HOSE ASSY (-6)	2	EA
11	0070781	1/4 ID HOSE ASSY (-6)	1	EA
12	0110490	3/4 ID HOSE ASSY	1	EA
13	0080524	3/4 ID HOSE ASSY (-12)	1	EA
14	0070792	HOSE -8-8S-8S 32 100R2	1	EA
15	0070782	1/4 ID HOSE ASSY (-6)	1	EA
16	0020267	HOSE ASSEMBLY 3/8" I.D.	2	EA
17	0040276	HOSE -4-4S-4S 20.5 100R1	1	EA
18	0070768	HOSE-4-4S-4S 18.5 100R1	1	EA
19	0020275	HOSE -6-6S-6S 16 100R2	1	EA

Courtesy of Crane.Market

HYDRAULICS

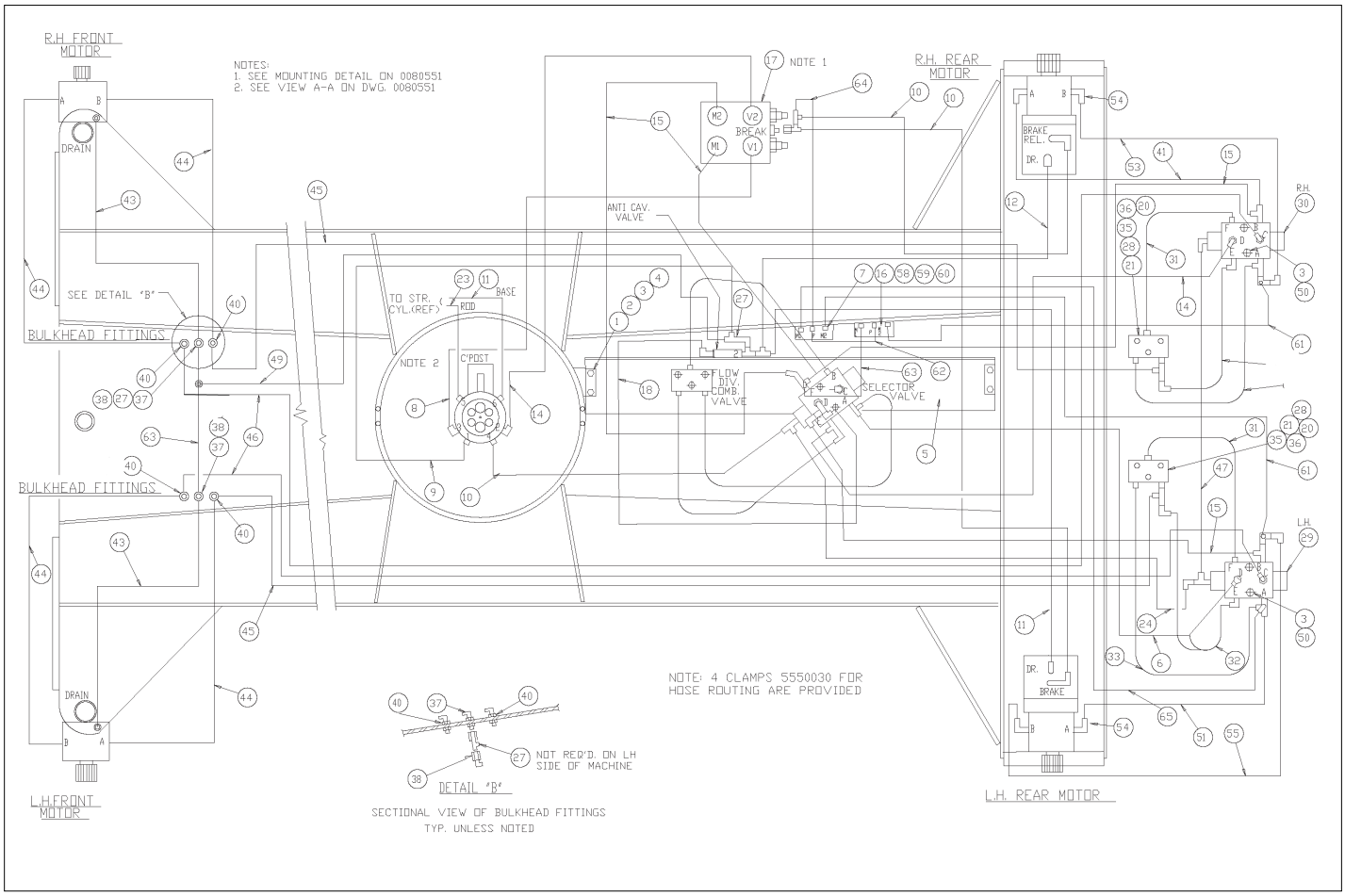

Courtesy of Crane.Market

Item	Part No.	Name	Qty	Uom
1	970419	BOLT HEXHD .375-16 1.25 GR. 5	8	EA
2	984109	NUT HEXHD .375-16	4	EA
3	987119	BOLT HEXHD .375-16 1.75 GR. 5	16	EA
4	986299	BOLT HEXHD .313-18 2.50 GR. 5	12	EA
5	0081601	DRIVE VALVE SUB-ASSY	1	EA
6	0080543	3/4 ID HOSE ASSY	1	EA
7	0081604	DRIVE SEQUENCE VALVE SUB-ASSY LH	1	EA
8	0400483	3/47 ID HOSE ASSY	1	EA
9	0080522	HOSE- -8-8S-8S 42 100R2	1	EA
10	0070772	HOSE -4-4S-4S 54 100R2	3	EA
11	0070783	1/4 ID HOSE ASSY (-6)	2	EA
12	0070781	1/4 ID HOSE ASSY (-6)	1	EA
14	0110490	3/4 ID HOSE ASSY	2	EA
15	0080524	3/4 ID HOSE ASSY (-12)	4	EA
16	0081600	DRIVE SEQUENCE VALVE SUB-ASSY RH	1	EA
17	0081042	MOTION CONTORL VALVE SUB-ASSY	1	EA
18	0070792	HOSE -8-8S-8S 32 100R2	1	EA
20	5560004	NUT HEXHD .250-20 LKG	6	EA
21	986019	WASHER FLAT .250	6	EA
23	0070782	1/4 ID HOSE ASSY (-6)	1	EA
24	0020655	HOSE -4-4S-4S 29.5 100R1	1	EA
27	5036705	FTG TEE SWIVEL RUN-6S-6S STL	1	EA
28	0080958	FLOW DIVIDER COMBINER VAVLE SUB-ASSY	2	EA
29	0080929	SELECTOR VALVE SUB-ASSY LH	1	EA

Courtesy of Crane.Market

Item	Part No.	Name	Qty	Uom
30	0080928	SELECTOR VALVE SUB-ASSY RH	1	EA
31	0080936	3/4 OD TUBE ASSY	2	EA
32	0080934	3/4 OD TUBE ASSY	2	EA
33	0080937	3/4 OD TUBE ASSY	2	EA
35	0081547	SPCR .375 1.75 5.00 3H STL – FLUIDTECH VALVE ONLY – ITEM NOT SHOWN	2	EA
36	970109	BOLT HEXHD .25-20 2.75	6	EA
37	5034502	BULKHEAD 90 DEG ELBOW -6-6	2	EA
38	5037005	FTG ELB90SWVL-6S-6S STL	2	EA
40	5034505	ELBOW 90 DEG BULKHEAD (-12)	4	EA
41	0080940	3/4 ID HOSE ASSY (-12)	1	EA
43	0072570	1/4 ID HOSE ASSY (-6)	2	EA
44	0080945	3/4 ID HOSE ASSY (-12)	4	EA
45	0080931	3/4 ID HOSE ASSY (-6)	2	EA
46	0080932	3/4 ID HOSE ASSY (-12)	2	EA
47	0020283	HOSE -4-4S-4S 15.25 100R2	1	EA
49	0080362	HOSE -6-6S-6S 93.5 100R2	1	EA
50	970369	CAPSCREW 5/16-18	4	EA
51	0080930	HOSE -12-12S45-12S 20 100R2 SP	1	EA
53	0080941	null	1	EA
54	5080015	3/4 ID HOSE ASSY (-12)	8	EA
55	0080939	LAST CHANCE FILTER, -12 FITTING (-12)	1	EA
58	970119	BLT HEXHD .313-18 3.00 GR5	4	EA
59	987109	WASHER LOCK .313	4	EA
60	986269	WASHER 5/16 MEDIUM FLAT	4	EA
61	0020273	HOSE-6-6S-6S 35.5 100R2	2	EA

Courtesy of Crane.Market

Item	Part No.	Name	Qty	Uom
62	0070768	HOSE-4-4S-4S 18.5 100R1	1	EA
63	0070786	HOSE -6-6S-6S 19 100R2	2	EA
64	0040276	HOSE -4-4S-4S 20.5 100R1	1	EA
65	0070764	3/8" HYDRAULIC HOSE	1	EA
66	5560277	HOSE GUIDE .375 RUBBER EDGE	4	EA

Courtesy of Crane.Market

HYDRAULICS

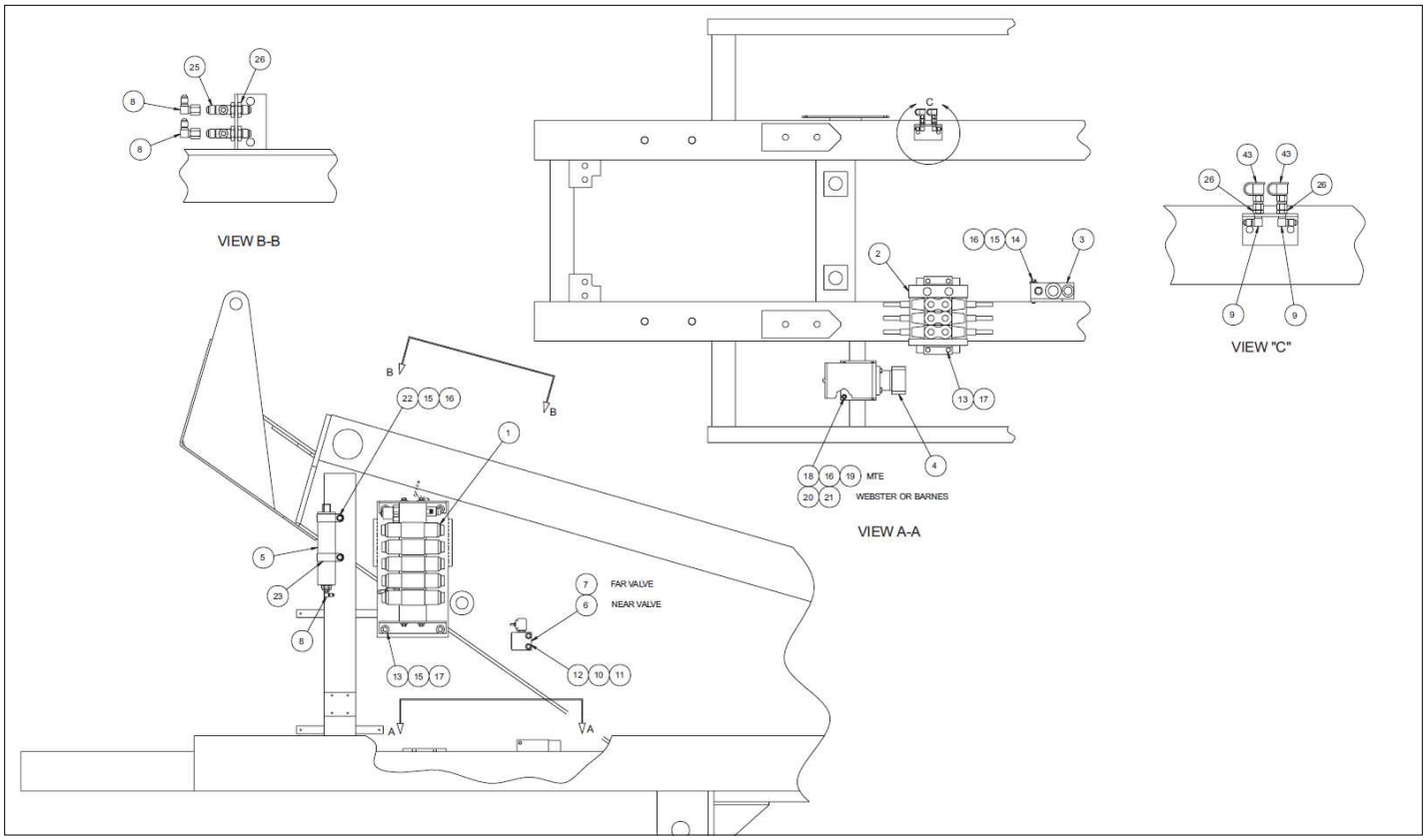

Courtesy of Crane.Market

Item	Part No.	Name	Qty	Uom
1	0082000	PACKAGE VALVE, NON-PROPORTIONAL	1	EA
2	0081873	PROP DRIVE, LIFT, SWING VALVE ASSY	1	EA
3	0081980	CHECK VALVE SUB ASSY	1	EA
4	0072940	EMERGENCY POWER UNIT SUBASSEMBLY	1	EA
5	0082055	ACCUMULATOR SUBASSEMBLY	1	EA
6	0081982	DUMP VALVE SUB ASSY	1	EA
7	0081981	RANGE VALVE SUB ASSY	1	EA
8	5037003	SWIVEL NUT 90° ELBOW	3	EA
9	5034501	FTG ELB90BHD-4S-4S STL	2	EA
10	986019	WASHER FLAT .250	2	EA
11	987099	WASHER LOCK .250	2	EA
12	970129	CAPSCREW 1/4-20 X 3" LG H.H.	2	EA
13	970479	CAPSCREW 3/8-16 X 1-1/4 INCH LONG HEX HEAD GRADE 5	8	EA
14	970529	CAPSCREW 3/8-16 X 2-1/2 INCH LONG HEX HEAD GRADE 5	2	EA
15	986299	BOLT HEXHD .313-18 2.50 GR. 5	8	EA
16	987119	BOLT HEXHD .375-16 1.75 GR. 5	6	EA
17	5560033	NUT HEXHD .375-16 LKG	8	EA
18	970469	BOLT HEXHD .375-16 1.00 GR. 5	2	EA
19	984109	NUT HEXHD .375-16	2	EA
20	970709	CAPSCREW 7/16-14 X 1 INCH LONG HEX HEAD GRADE 5	4	EA
21	987129	WASHER 7/16 MEDIUM LOCK	4	EA
22	970449	CAPSCREW 3/8-16 X 3/4 INCH LONG HEX HEAD GRADE 5	2	EA
23	5093014	CLAMP CUSHION #36 (2-1/4")	2	EA

Courtesy of Crane.Market

Item	Part No.	Name	Qty	Uom
24	5058824	HOSE CLAMP	2	EA
25	5035403	FTG TEE BHD RUN-4S-4S STL	2	EA
26	5074401	FTG LKNT BDH-4 STL	4	EA

Courtesy of Crane.Market

HYDRAULICS

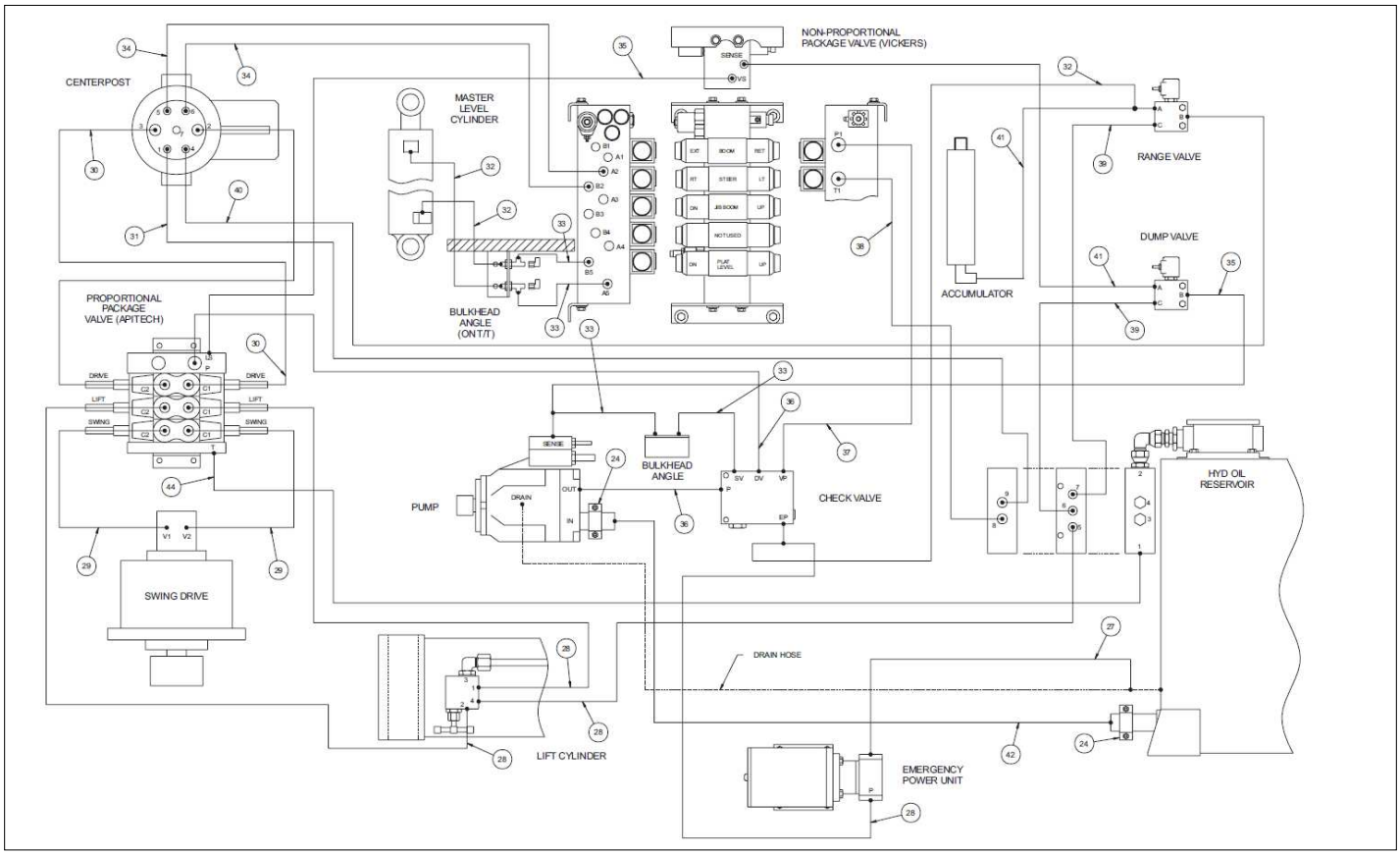

Courtesy of Crane.Market

Item	Part No.	Name	Qty	Uom
27	0070927	HOSE -8-8S-8S 23.5 100R2	1	EA
28	0020273	HOSE-6-6S-6S 35.5 100R2	4	EA
29	0070789	3/8" HYDRAULIC HOSE	2	EA
30	0400497	3/4 INCH HYDRAULIC HOSE	2	EA
31	0100277	1/2" ID HOSE ASSY	1	EA
32	0080359	HOSE-4-4S-4S 23.5 100R1	3	EA
33	0070765	HOSE-4-4SS-4S 29 100R1	4	EA
34	0080362	HOSE -6-6S-6S 93.5 100R2	2	EA
35	0050137	HOSE -4-4S-4S 36	2	EA
36	0110199	HOSE - 16-16S-16S 34	2	EA
37	0020372	1/2" ID HOSE ASSY	1	EA
38	0070926	HOSE -8-8S-8S 24 100R2	1	EA
39	0020283	HOSE -4-4S-4S 15.25 100R2	2	EA
40	0070911	1/4" ID HOSE ASSY	1	EA
41	0020280	HOSE -4-4S-4S 62100 R2	2	EA
42	0080843	HOSE SUCTION 1.5 ID 34	1	EA
43	5070005	NIPPLE-DIAGNOSTIC -4 JIC FEM	2	EA
44	0081992	1" ID HOSE ASSY	1	EA

Courtesy of Crane.Market

HYDRAULICS

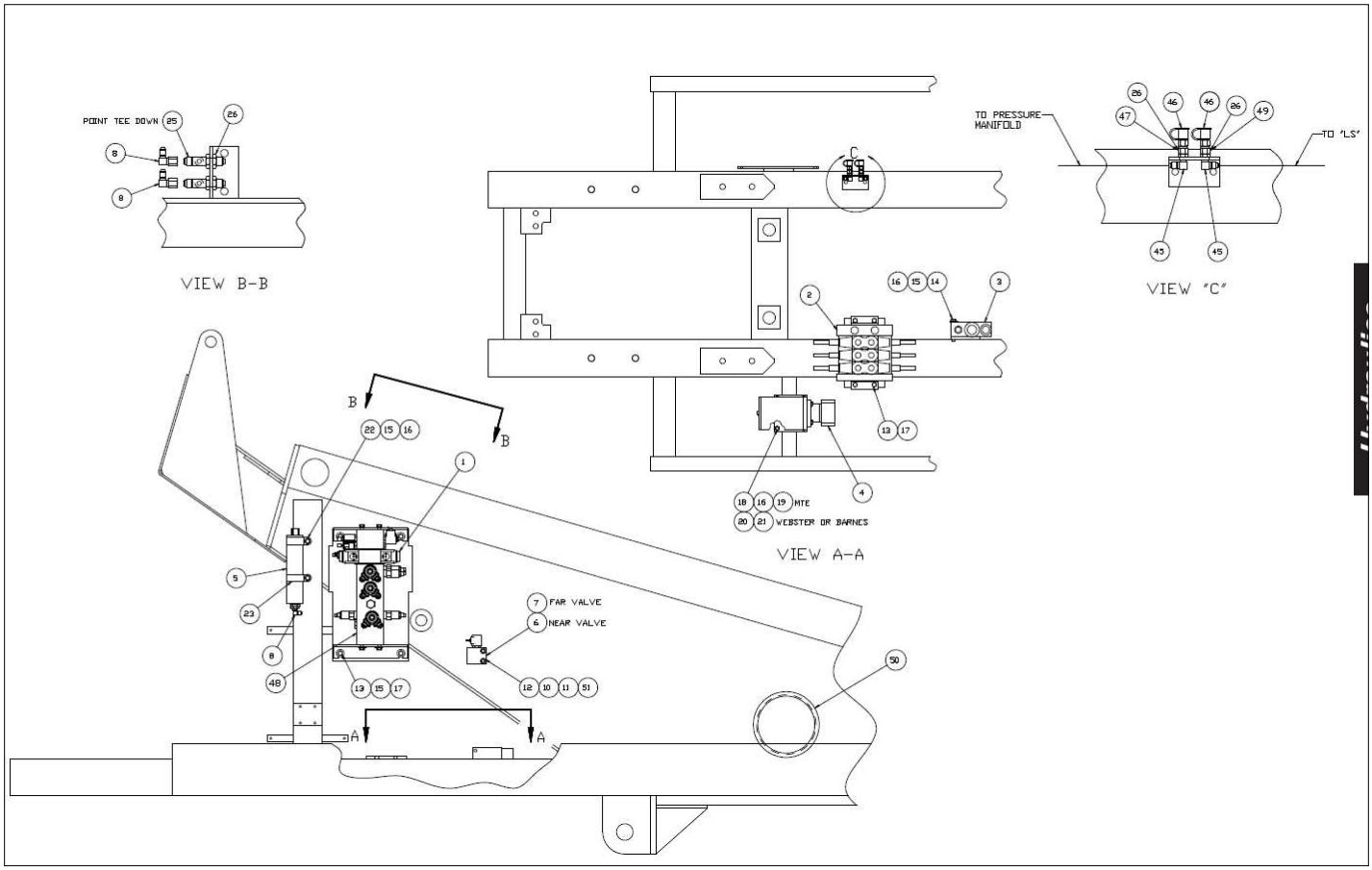

Courtesy of Crane.Market

Item	Part No.	Name	Qty	Uom
1	0084147	NON-PROP. PACKAGE VALVE SUB ASSY	1	EA
2	0081873	PROP DRIVE, LIFT, SWING VALVE ASSY	1	EA
3	0081980	CHECK VALVE SUB ASSY	1	EA
4	0072940	EMERGENCY POWER UNIT SUBASSEMBLY	1	EA
5	0082055	ACCUMULATOR SUBASSEMBLY	1	EA
6	0081982	DUMP VALVE SUB ASSY	1	EA
7	0081981	RANGE VALVE SUB ASSY	1	EA
8	5037003	SWIVEL NUT 90° ELBOW	3	EA
10	986019	WASHER FLAT .250	2	EA
11	987089	#10 LOCK WASHER	2	EA
12	970129	CAPSCREW 1/4-20 X 3" LG H.H.	2	EA
13	970419	BOLT HEXHD .375-16 1.25 GR. 5	8	EA
14	970529	CAPSCREW 3/8-16 X 2-1/2 INCH LONG HEX HEAD GRADE 5	2	EA
15	986299	BOLT HEXHD .313-18 2.50 GR. 5	8	EA
16	987119	BOLT HEXHD .375-16 1.75 GR. 5	6	EA
17	5560033	NUT HEXHD .375-16 LKG	8	EA
18	970469	BOLT HEXHD .375-16 1.00 GR. 5	2	EA
19	984109	NUT HEXHD .375-16	2	EA
20	PNNA	CAPSCREW 7/16-14 X 1" LG H.H.	4	EA
21	PNNA	LOCKWASHER 7/16" MED	4	EA
22	970449	CAPSCREW 3/8-16 X 3/4 INCH LONG HEX HEAD GRADE 5	2	EA
23	5093014	CLAMP CUSHION #36 (2-1/4")	2	EA
24	5058824	HOSE CLAMP	2	EA

Courtesy of Crane.Market

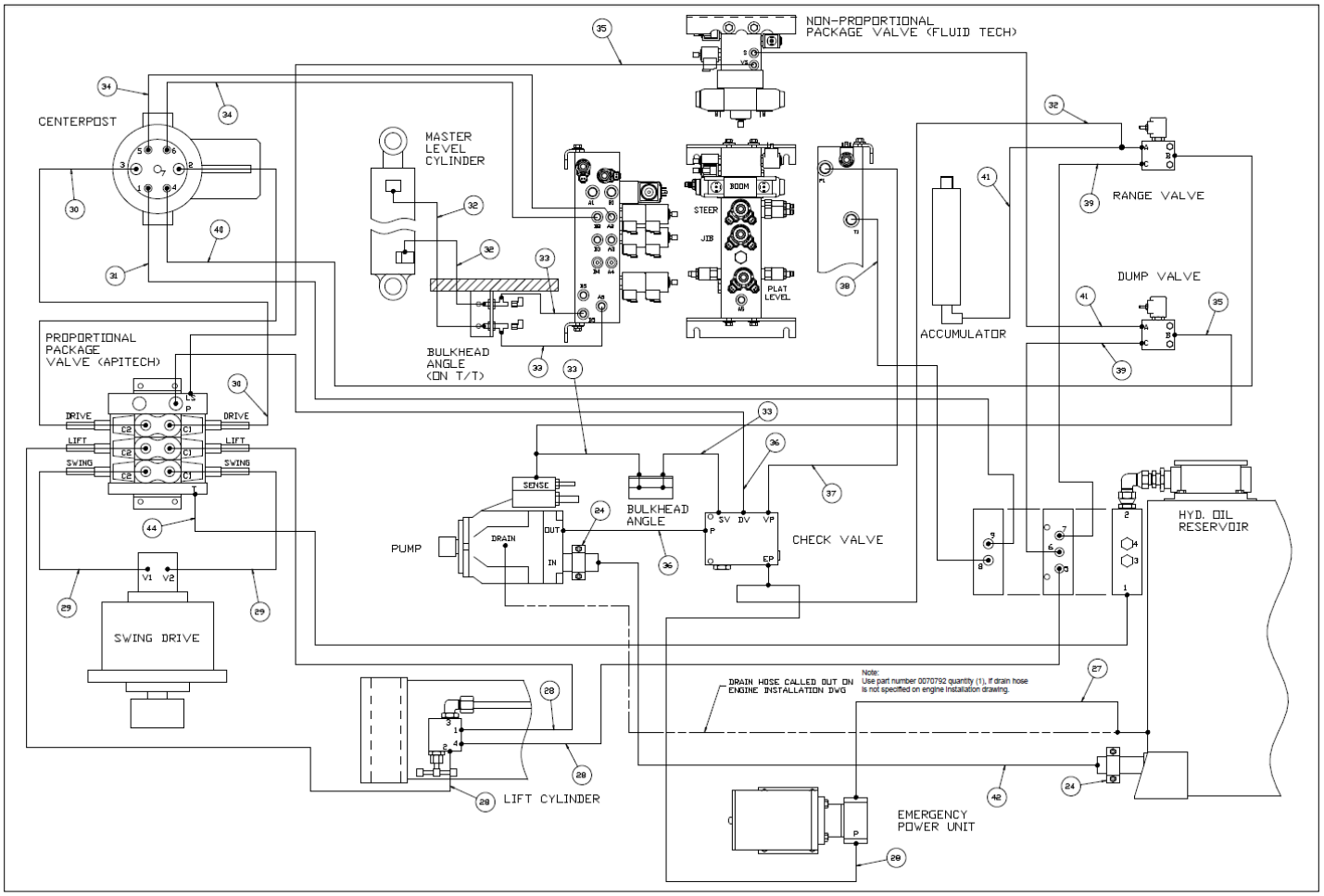

Courtesy of Crane.Market

Item	Part No.	Name	Qty	Uom
25	5035403	FTG TEE BHD RUN-4S-4S STL	2	EA
26	5074401	FTG LKNT BDH-4 STL	4	EA
27	0070927	HOSE -8-8S-8S 23.5 100R2	1	EA
28	0020273	HOSE-6-6S-6S 35.5 100R2	4	EA
29	0070789	3/8" HYDRAULIC HOSE	2	EA
30	0400497	3/4 INCH HYDRAULIC HOSE	2	EA
31	0100277	1/2" ID HOSE ASSY	1	EA
32	0080359	HOSE-4-4S-4S 23.5 100R1	3	EA
33	0070765	HOSE-4-4SS-4S 29 100R1	4	EA
34	0080362	HOSE -6-6S-6S 93.5 100R2	2	EA
35	0050137	HOSE -4-4S-4S 36	2	EA
36	0110199	HOSE - 16-16S-16S 34	2	EA
37	0020372	1/2" ID HOSE ASSY	1	EA
38	0070926	HOSE -8-8S-8S 24 100R2	1	EA
39	0020283	HOSE -4-4S-4S 15.25 100R2	2	EA
40	0070911	1/4" ID HOSE ASSY	1	EA
41	0020280	HOSE -4-4S-4S 62100 R2	2	EA
42	0080843	HOSE SUCTION 1.5 ID 34	1	EA
44	0081992	1" ID HOSE ASSY	1	EA
45	5034501	FTG ELB90BHD-4S-4S STL	2	EA
46	5070005	NIPPLE-DIAGNOSTIC -4 JIC FEM	2	EA
47	0075378	DECAL, SYSTEM PRESSURE	1	EA
48	0075379	DECAL, LEVEL RELIEF PRESSURE	1	EA
49	0075380	DECAL, SENSE PRESSURE	1	EA
50	5560277	HOSE GUIDE .375 RUBBER EDGE	1.63 FT	EA
51	0172299	SPACER	1	EA

Courtesy of Crane.Market

ELECTRICAL

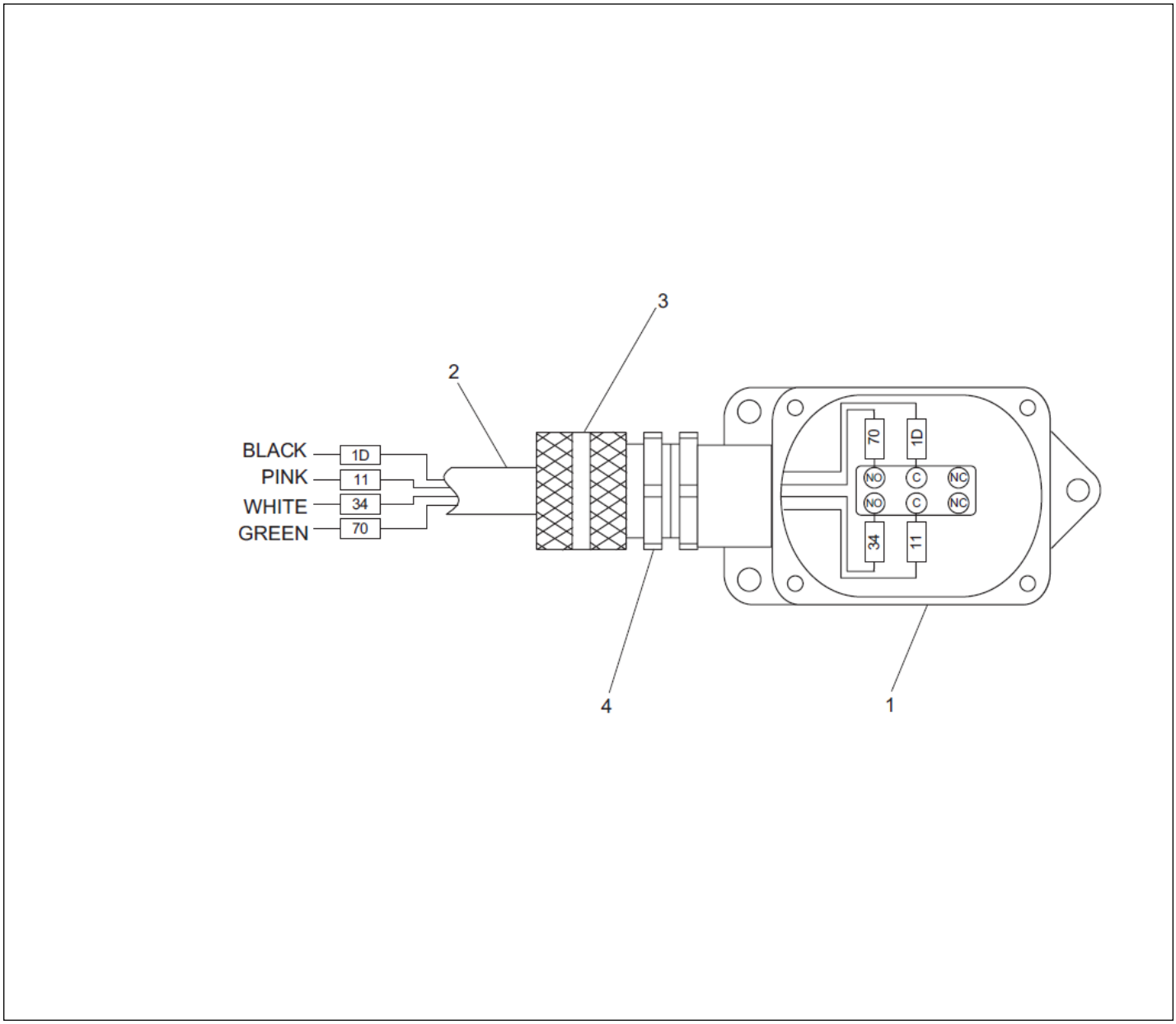

Courtesy of Crane.Market

Item	Part No.	Name	Qty	Uom
1	3020019	SWITCH	1	EA
Not Shown	3020052	SWITCH UNIT	1	EA
2	0081976	WIRE HARNESS, BOOM SWITCH	1	EA
3	3040187	CONNECTOR	1	EA
4	3040070	LOCKNUT .50	1	EA

Courtesy of Crane.Market

ELECTRICAL

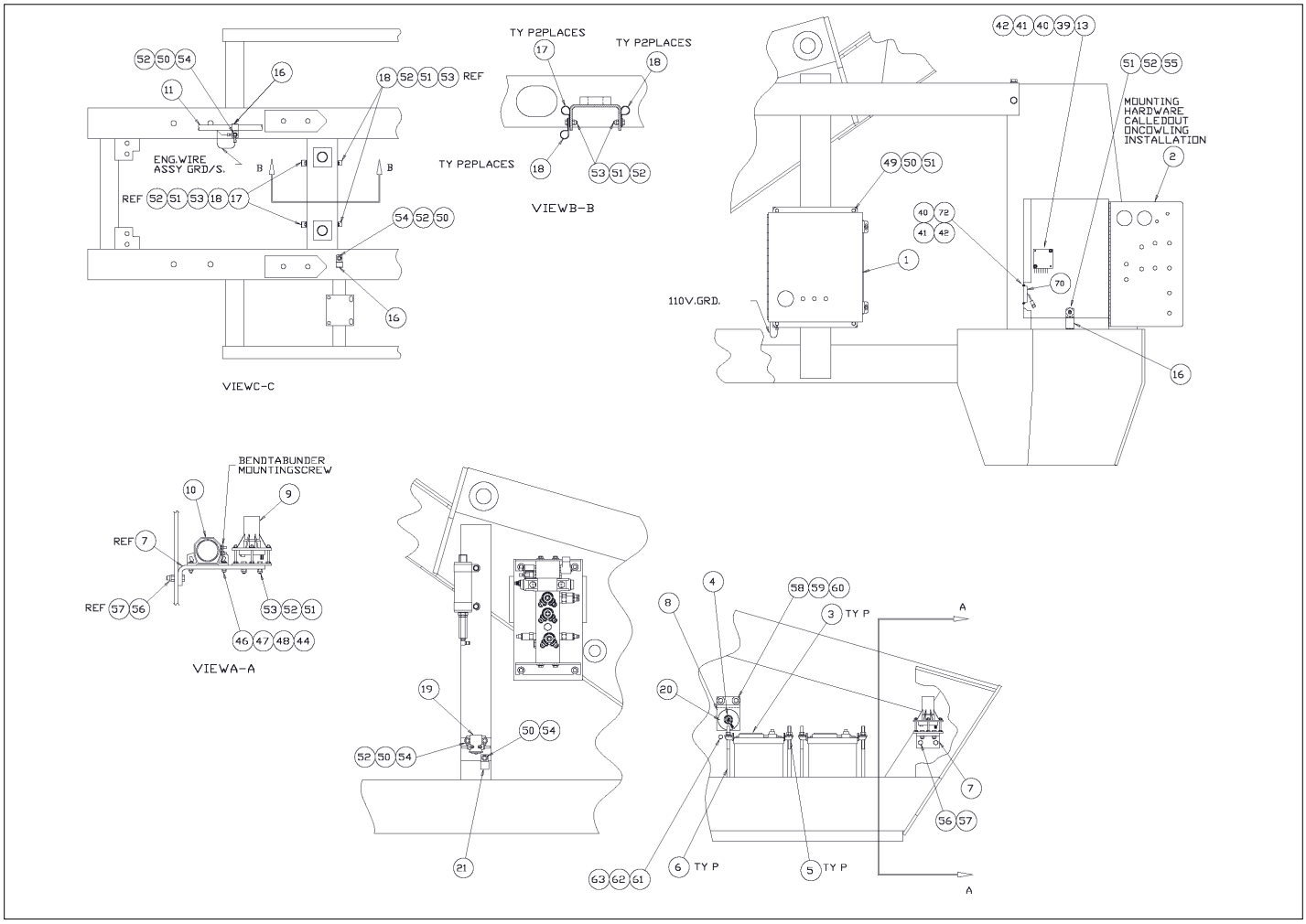

Courtesy of Crane.Market

Item	Part No.	Name	Qty	Uom
1	0081998	WIRING BOX SUB ASSY	1	EA
2	0083531	GROUND CONTROL PANEL ASSY TB66 CU	1	EA
3	3050002	BATTERY	2	EA
4	3020049	SW BATTERY DISCONNECT	1	EA
5	3050008	BATTERY HOLDDOWN	2	EA
6	3050004	BATTERY HOLDDOWN BOLT	4	EA
7	0181503	BRACKET, TILT ALARM	1	EA
8	0073051	BRACKET, BATTERY DISCONNECT	1	EA
9	3020040	TILT ALARM SENSOR	1	EA
10	480652	ALARM97DBA DUAL TONE 12/24V	1	EA
11	0083508	ENG WIRE ASSY TB60/PRO66 CU	1	EA
12	0084136	TURNTABLE WIRE ASSY	1	EA
13	3040534	PDM MODULE	1	EA
14	0192295	GLOW PLUG TIMER WIRE ASSEMBLY	1	EA
15	3014710	TERM R10I 12/10	5.33FT	EA
16	5093008	CLIP CUSSION 1.05 VINYL COATED	3	EA
17	5093002	CLAMP	2	EA
18	5093024	CLAMP	4	EA
19	3040506	SOLENOID	1	EA
20	0073089	PLACARD	1	EA
21	3040469	RELAY SPDT 12V 30AMP SONG	1	EA
22	3049953	TERM FEM250FI 12/10	1	EA
23	3040046	TERM, .250 MALE SLIP-ON F.I. 22/18 WIRE	2	EA
24	961089	TERM R101 16/14	1	EA
26	3040082	TERM MALE250FI 16/14	8	EA

Courtesy of Crane.Market

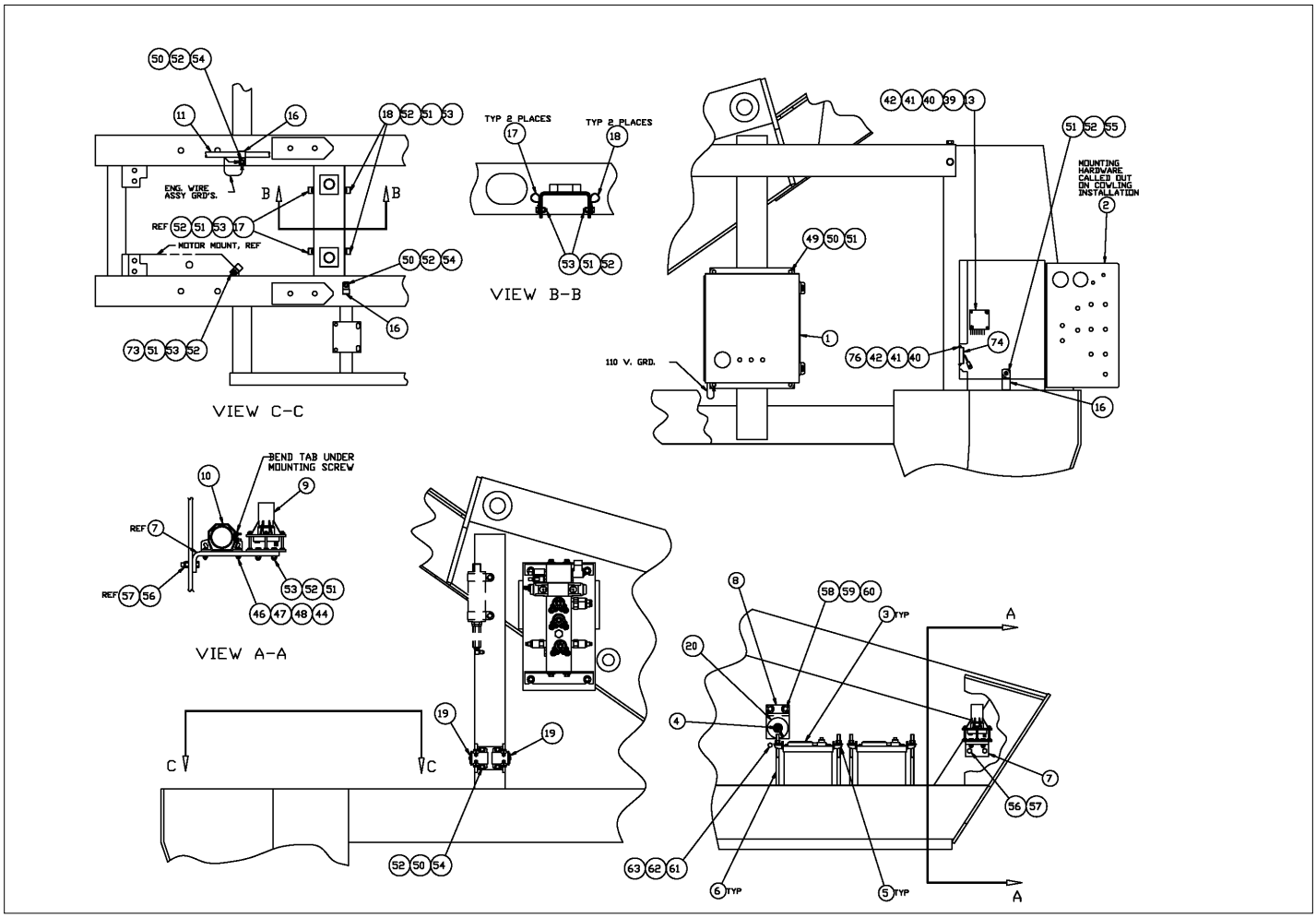

Courtesy of Crane.Market

Item	Part No.	Name	Qty	Uom
27	3040452	BOOT	2	EA
28	0080483	BATTERY WIRE	1	EA
29	0080484	WIRE 2/0 R375 R375 13 RED	2	EA
30	0080482	JUMPER WIRE	1	EA
33	0070705	BATTERY WIRE	1	EA
35	0090319	JUMPER WIRE	1	EA
36	3044162	TERM, 1/4 STUD INS. 16/14 WIRE	1	EA
37	3040270	BOOT BATTERY CABLE END Y-TYPE	1	EA
38	3040269	BOOT BTRY CABLE END BLK 1/0 GA	1	EA
39	PNNA	MACHINE SCREW #6-32 X 1.25" LG RD HD	2	EA
40	PNNA	NUT, #6-32 HEX	4	EA
41	PNNA	FLATWASHER #6	4	EA
42	PNNA	LOCKWASHER #6 MED	4	EA
44	PNNA	NUT #10-24 ESNA	6	EA
45	PNNA	SCREW #10-24 X 1/2" LG RD HD	4	EA
46	PNNA	SCREW #10-24 X 1" LG RD HD	2	EA
47	PNNA	FLATWASHER #10	2	EA
48	PNNA	STAR WASHER #10	1	EA
49	PNNA	CAPSCREW 1/4-20 X 3/4" LG H.H.	4	EA
50	PNNA	LOCKWASHER 1/4 MED	9	EA
51	PNNA	NUT, 1/4-20 ESNA	12	EA
52	PNNA	FLATWASHER 1/4	12	EA
53	PNNA	CAPSCREW 1/4-20 X 1" LG H.H.	7	EA
54	PNNA	CAPSCREW 1/4-20 X 1/2" LG H.H.	3	EA
55	PNNA	CAPSCREW 1/4-20 X 3/4" LG H.H.	1	EA

Courtesy of Crane.Market

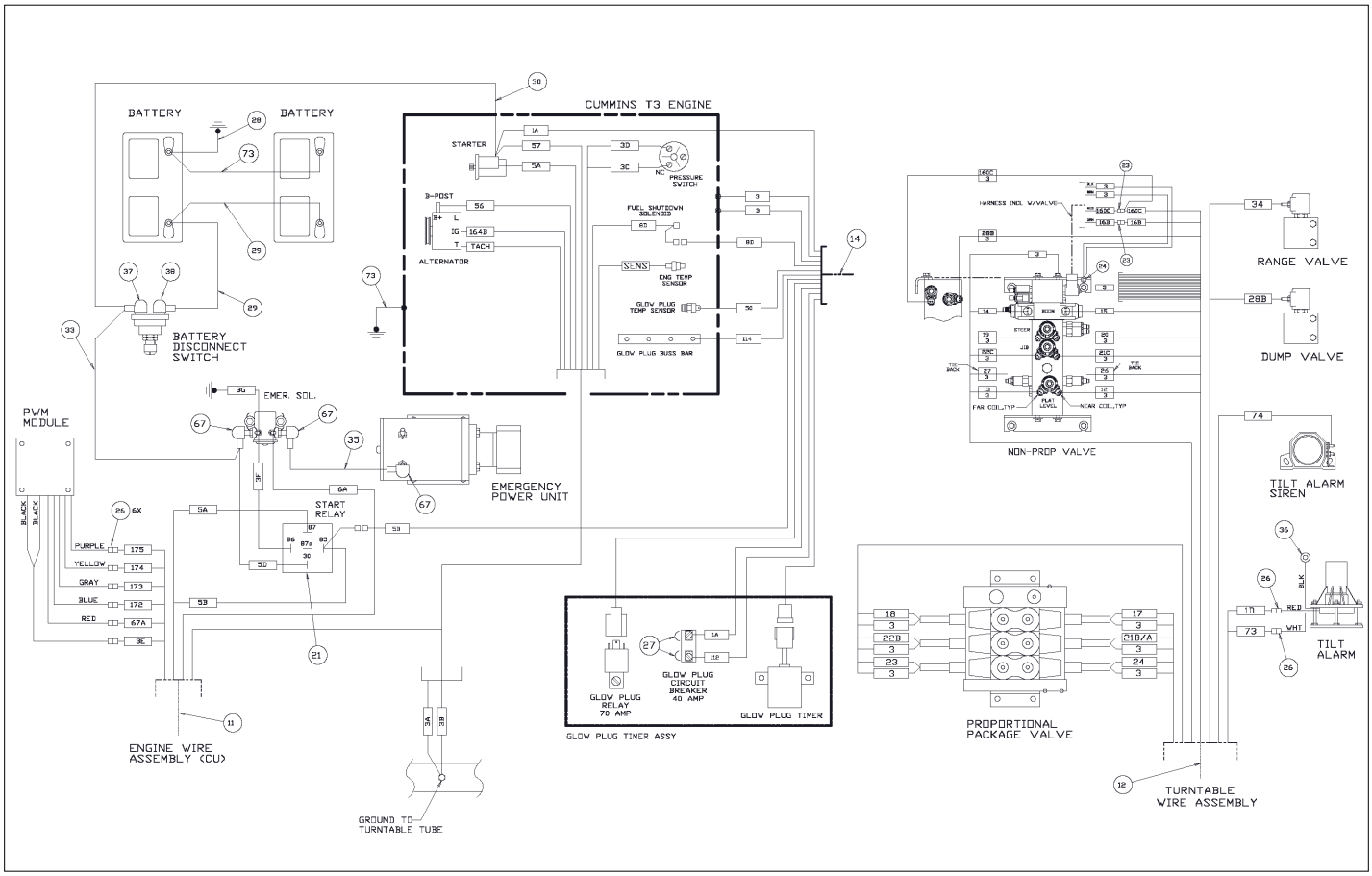

Courtesy of Crane.Market

Item	Part No.	Name	Qty	Uom
56	PNNA	CAPSCREW 3/8-16 X 1.50" LG H.H.	2	EA
57	PNNA	NUT, 3/8-16 ESNA	2	EA
58	PNNA	CAPSCREW 3/8-16 X 1" LG H.H.	2	EA
59	PNNA	LOCKWASHER 3/8 MED	2	EA
60	PNNA	FLATWASHER 3/8	2	EA
61	PNNA	CAPSCREW 5/16-18 X 3/4" LG H.H.	1	EA
62	PNNA	FLATWASHER 5/16	1	EA
63	PNNA	LOCKWASHER 5/16 MED	1	EA
66	3044854	REPLACEMENT TERMINAL	1	EA
67	3040268	BOOT	3	EA
70	3030122	ENG PROTECT MODULE 4-PNT HIGH- SETPOINTS A	1	EA
72	PNNA	SCR THRD #6-32 .50	2	EA
73	0075268	WIRE 2/0 R375 R375 13 BLK	2	EA

Courtesy of Crane.Market

ELECTRICAL

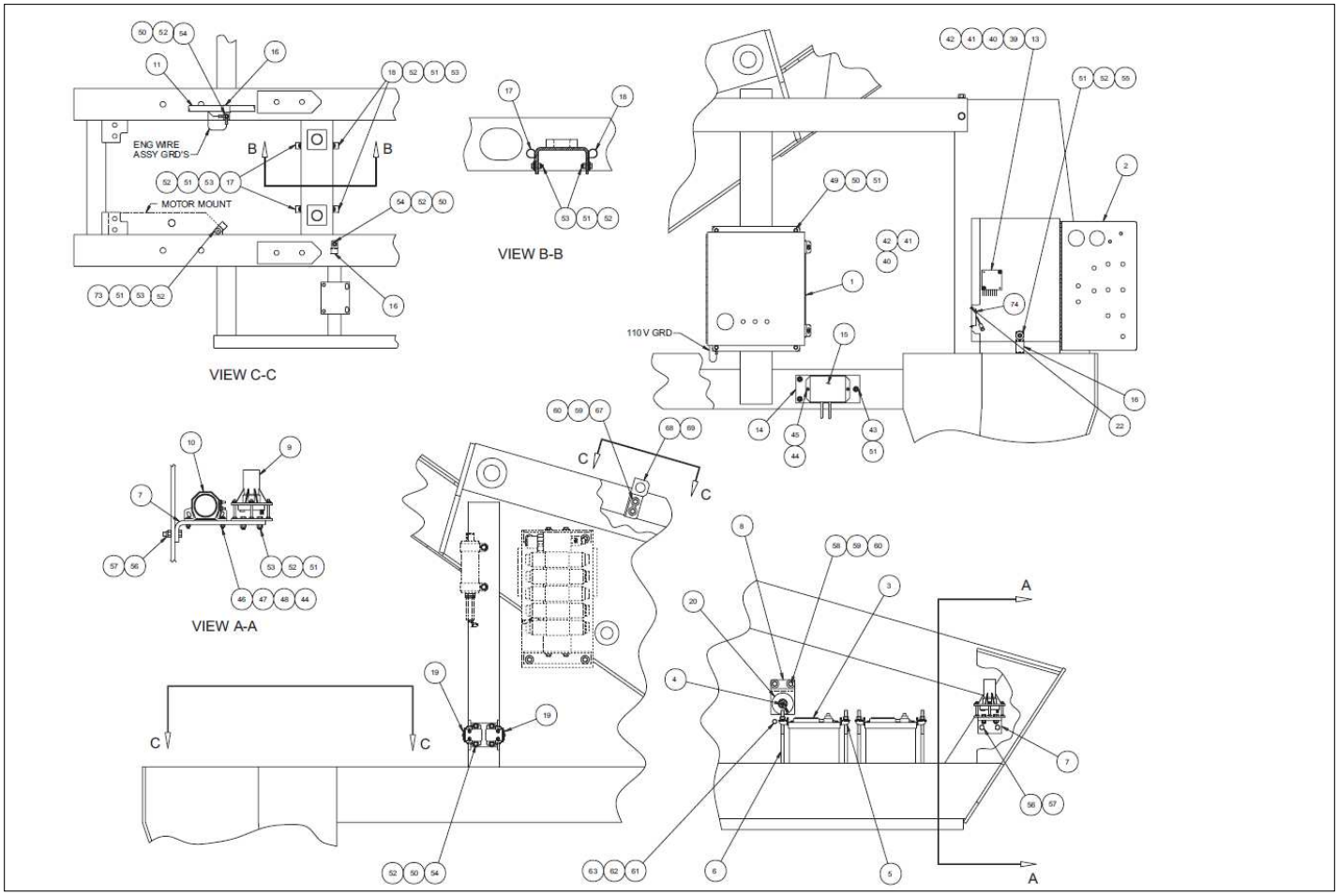

Courtesy of Crane.Market

Item	Part No.	Name	Qty	Uom
1	0081998	WIRING BOX SUB ASSY	1	EA
2	0083401	GROUND CONTROL PANEL SUB ASSY		EA
4	3020049	SW BATTERY DISCONNECT	1	EA
5	3050008	BATTERY HOLDDOWN	2	EA
6	3050004	BATTERY HOLDDOWN BOLT	4	EA
7	0181503	BRACKET, TILT ALARM	1	EA
8	0073051	BRACKET, BATTERY DISCONNECT	1	EA
9	3020040	TILT ALARM SENSOR	1	EA
10	480652	ALARM97DBA DUAL TONE 12/24V	1	EA
11	0083395	ENGINE WIRE ASSEMBLY-DEUTZ	1	EA
12	0081846	TURNTABLE WIRE ASSY-SIMPLIFIED HYDR	1	EA
13	322017028	PWM INSTL KIT TB60/66J – IF REPLACING APITECH MODULE WITH KARTECH	1	EA
Not Shown	IP3040534	INSTL PROC KARTECH	1	EA
Not Shown	3220164	CONTROLLER PWM MODULE 60-66 – IF REPLACING KARTECH MODULE WITH KARTECH	1	EA
Not Shown	0071812	WIRE 16 R10 FEM250FI 18	1	EA
Not Shown	3040046	TERM, .250 MALE SLIP-ON F.I. 22/18 WIRE	5	EA
Not Shown	974239	SCREW RHD #6-32 .50	2	EA
14	0082029	MOUNT PLATE, ACTUATOR MODULE	1	EA
15	20082046	ACTUATOR MODULE – INCLUDED WITH ENGINE	1	EA
16	5093008	CLIP CUSSION 1.05 VINYL COATED	3	EA

Courtesy of Crane.Market

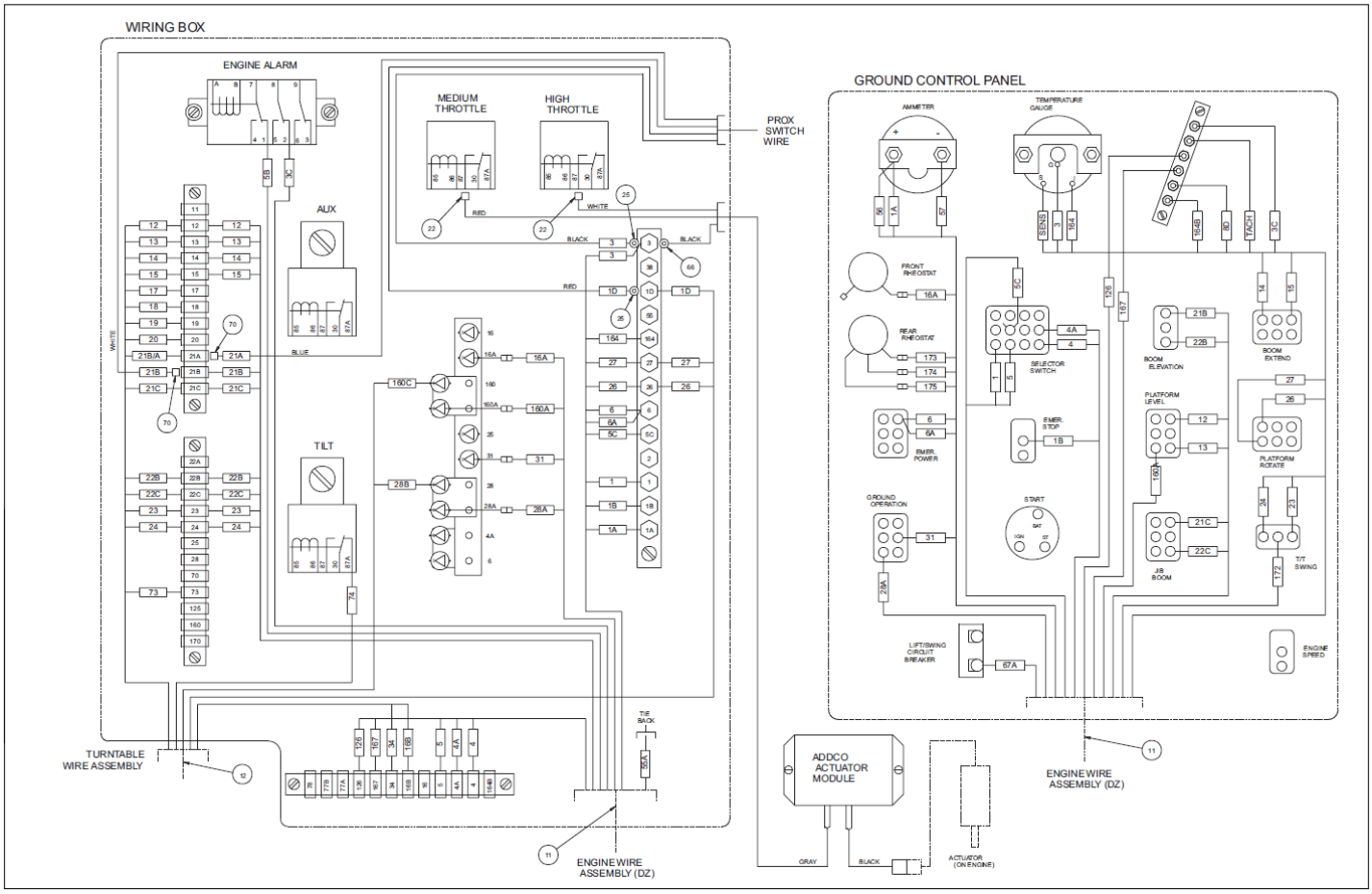

Courtesy of Crane.Market

Item	Part No.	Name	Qty	Uom
17	5093004	CLAMP	2	EA
18	5093000	CLAMP	2	EA
19	3040506	SOLENOID	2	EA
20	0073089	PLACARD	1	EA
21	5569837	WSHR FLAT M18 BR	1	EA
22	5560666	MACHINE SCREW #6-32 X 1/2 INCH LONG TRUSS HEAD	2	EA
23	3070039	TEMP SENSOR M18 X 1.5 HIGH	1	EA
24	0111476	JUMPER WIRE	1	EA
25	3044146	TERM R10I 22/18	4	EA
26	3040082	TERM MALE250FI 16/14	4	EA
27	0151920	WIRE HARNESS, ALTERNATOR CONNECTOR	1	EA
28	0080483	BATTERY WIRE	1	EA
29	0080484	WIRE 2/0 R375 R375 13 RED	4	EA
30	0080482	JUMPER WIRE	1	EA
31	0151372	JUMPER WIRE	1	EA
32	0151370	JUMPER WIRE	1	EA
33	0070705	BATTERY WIRE	1	EA
34	0070724	WIRE 18 R10I R10I 3	1	EA
35	0090319	JUMPER WIRE	1	EA
36	3044162	TERM, 1/4 STUD INS. 16/14 WIRE	1	EA
37	3040270	BOOT BATTERY CABLE END Y-TYPE	1	EA
38	3040269	BOOT BTRY CABLE END BLK 1/0 GA	1	EA
39	974289	MACHINE SCREW #6-32 X 1-1/4 INCH LONG ROUND HEAD	2	EA
40	984009	NUT #6-32 HEX	4	EA
41	986159	WSHR FLAT 6	4	EA
42	987349	WSHR LOCK 6	4	EA

Courtesy of Crane.Market

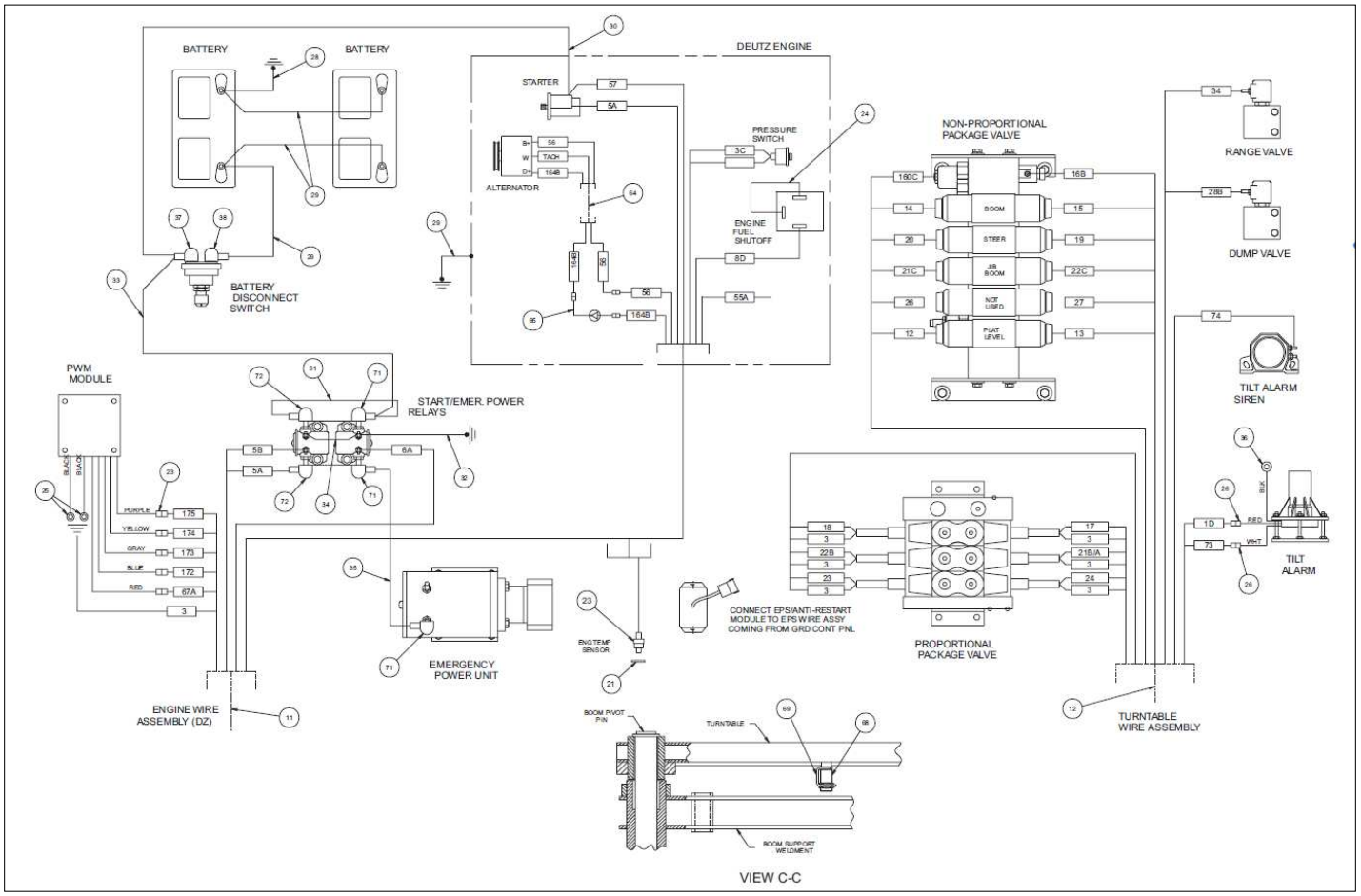

Courtesy of Crane.Market

Item	Part No.	Name	Qty	Uom
43	7630230	SANDWICH MOUNT	3	EA
44	5560034	NUT HEX LKG 10-24	4	EA
45	974659	SCREW RHD #10-24 X .50 PLATED	2	EA
46	974709	SCREW RHD #10-24 X 1 PLATED	2	EA
47	986009	FLAT WASHER #10	2	EA
48	5560654	WASHER LOCK #10	1	EA
49	970029	CAPSCREW 1/4-20 X 3/4 INCH LONG HEX HEAD GRADE 5	4	EA
50	987099	WASHER LOCK .250	10	EA
51	5560004	NUT HEXHD .250-20 LKG	17	EA
52	986019	WASHER FLAT .250	16	EA
53	970049	BOLT HEXHD .250-20 1.00 GR. 5	9	EA
54	970009	BLT HEXHD .250-20 .500 GR5-	6	EA
55	970029	CAPSCREW 1/4-20 X 3/4 INCH LONG HEX HEAD GRADE 5	1	EA
56	970489	CAPSCREW 3/8-16 X 1-1/2 INCH LONG HEX HEAD GRADE 5	2	EA
57	5560033	NUT HEXHD .375-16 LKG	2	EA
58	970469	BOLT HEXHD .375-16 1.00 GR. 5	2	EA
59	987119	BOLT HEXHD .375-16 1.75 GR. 5	4	EA
60	986299	BOLT HEXHD .313-18 2.50 GR. 5	4	EA
61	970449	CAPSCREW 3/8-16 X 3/4 INCH LONG HEX HEAD GRADE 5	1	EA
62	986269	WASHER 5/16 MEDIUM FLAT	1	EA
63	987109	WASHER LOCK .313	1	EA
64	0074579	ALTERNATOR WIRE ASSY	1	EA
65	0181026	DIODE WIRE – INCLUDES 3040293 DIODE	1	EA

Courtesy of Crane.Market

Item	Part No.	Name	Qty	Uom
66	3044161	TERM R10I 16/14	1	EA
67	5569865	BLT HEXHD .375-16 X 2.75 GR5 ZP	2	EA
68	3020109	PROXIMITY SWITCH	1	EA
69	0081974	BRACKET, PROXIMITY SWITCH	1	EA
70	3046972	REPLACEMENT TERMINAL	2	EA
71	3040268	BOOT	3	EA
72	3040452	BOOT	2	EA
73	5093002	CLAMP	1	EA
74	3030122	ENG PROTECT MODULE 4-PNT HIGH- SETPOINTS A	1	EA

Courtesy of Crane.Market

ELECTRICAL

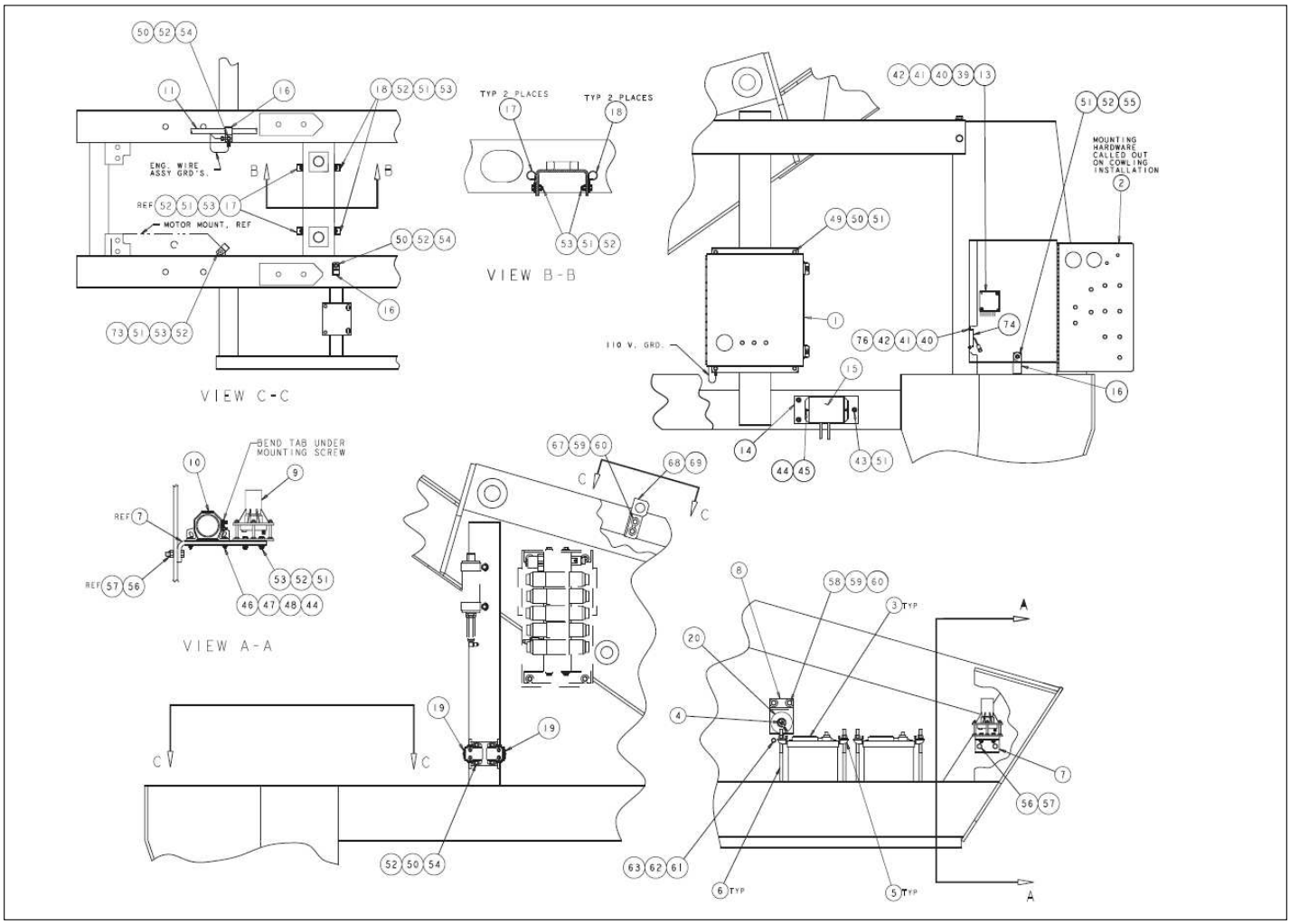

Courtesy of Crane.Market

Item	Part No.	Name	Qty	Uom
1	0081998	WIRING BOX SUB ASSY	1	EA
2	0083401	GROUND CONTROL PANEL SUB ASSY	1	EA
5	3050008	BATTERY HOLDDOWN	2	EA
6	3050004	BATTERY HOLDDOWN BOLT	4	EA
7	0181503	BRACKET, TILT ALARM	1	EA
8	0073051	BRACKET, BATTERY DISCONNECT	1	EA
9	3020040	TILT ALARM SENSOR	1	EA
10	480652	ALARM97DBA DUAL TONE 12/24V	1	EA
11	0083395	ENGINE WIRE ASSEMBLY-DEUTZ	1	EA
12	0081846	TURNTABLE WIRE ASSY-SIMPLIFIED HYDR	1	EA
13	322017028	PWM INSTL KIT TB60/66J – IF REPLACING APITECH MODULE WITH KARTECH	1	EA
Not Shown	IP3040534	INSTL PROC KARTECH	1	EA
Not Shown	3220164	CONTROLLER PWM MODULE 60-66 – IF REPLACING KARTECH MODULE WITH KARTECH	1	EA
Not Shown	0071812	WIRE 16 R10 FEM250FI 18	1	EA
Not Shown	3040046	TERM, .250 MALE SLIP-ON F.I. 22/18 WIRE	5	EA
Not Shown	974239	SCREW RHD #6-32 .50	2	EA
14	0082029	MOUNT PLATE, ACTUATOR MODULE	1	EA
15	0163184	ACTUATOR MODULE SUB ASSY	1	EA
16	5093008	CLIP CUSSION 1.05 VINYL COATED	3	EA
17	5093004	CLAMP	2	EA

Courtesy of Crane.Market

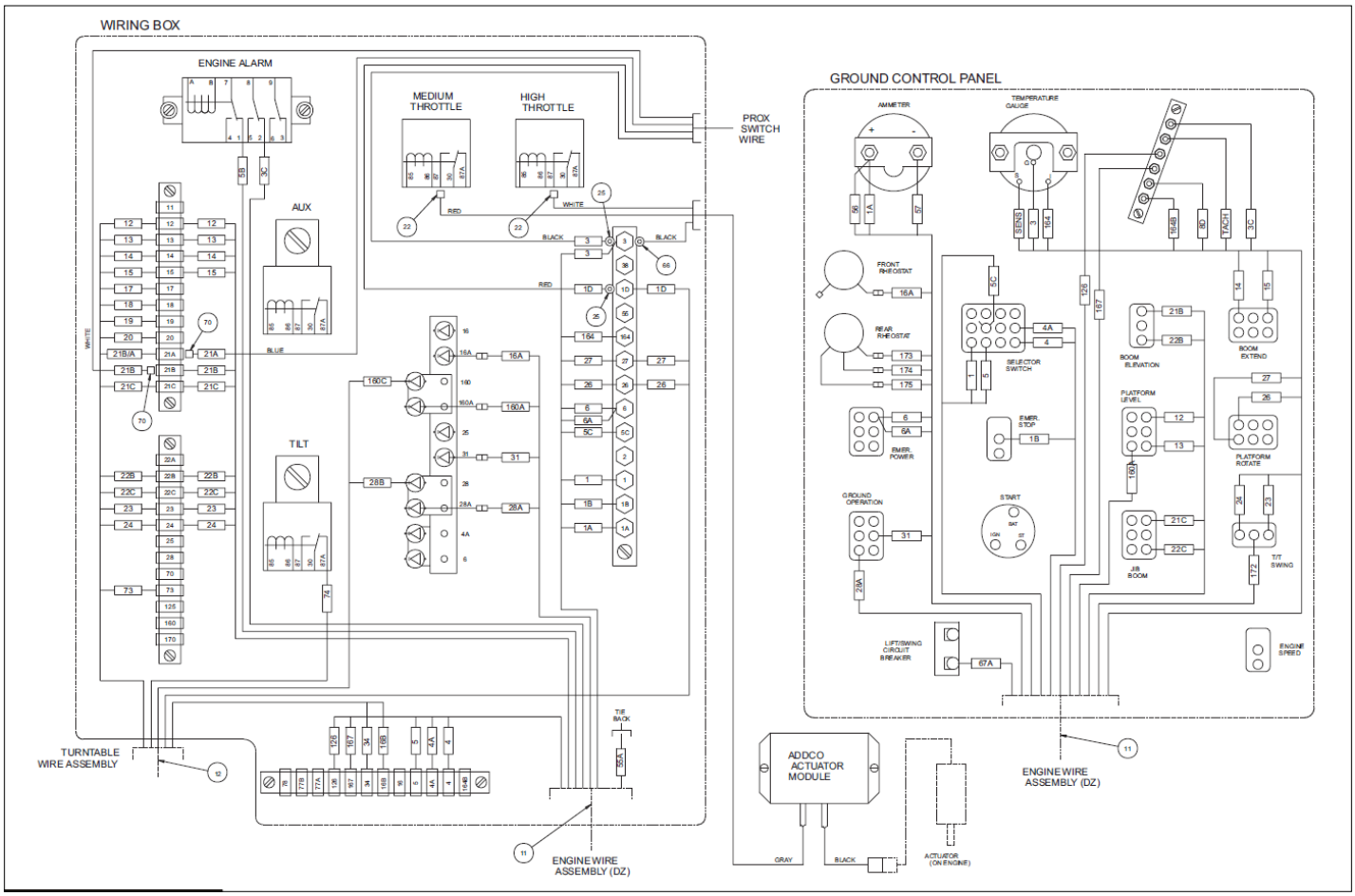

Courtesy of Crane.Market

Item	Part No.	Name	Qty	Uom
18	5093000	CLAMP	2	EA
19	3040506	SOLENOID	2	EA
20	0073089	PLACARD	1	EA
25	3044146	TERM R10I 22/18	3	EA
26	3040082	TERM MALE250FI 16/14	4	EA
28	0080483	BATTERY WIRE	1	EA
29	0080484	WIRE 2/0 R375 R375 13 RED	2	EA
30	0080482	JUMPER WIRE	1	EA
31	0151372	JUMPER WIRE	1	EA
32	0151370	JUMPER WIRE	1	EA
33	0070705	BATTERY WIRE	1	EA
34	0151371	WIRE 16 R10 R10 5	1	EA
35	0090319	JUMPER WIRE	1	EA
36	3044162	TERM, 1/4 STUD INS. 16/14 WIRE	1	EA
37	3040270	BOOT BATTERY CABLE END Y-TYPE	1	EA
38	3040269	BOOT BTRY CABLE END BLK 1/0 GA	1	EA
39	PNNA	SCR RDHD #6-32 1.25 PLTD	2	EA
40	PNNA	NUT, #6-32 HEX	4	EA
41	PNNA	WSHR FLAT #6	4	EA
42	PNNA	WSHR LOCK #6	4	EA
43	7630230	SANDWICH MOUNT	3	EA
44	PNNA	NUT HEXHD #10-24 LKG	4	EA
45	PNNA	SCR RDHD #10-24 .50 PLTD	2	EA
46	PNNA	SCR RDHD #10-24 1.00 PLTD	2	EA
47	PNNA	WSHR FLAT #10	2	EA
48	PNNA	WSHR START TOOTH #10	1	EA
49	PNNA	BLT HEXHD .250-20 .75 GR5	4	EA
50	PNNA	WSHR LOCK .250 MDM	10	EA

Courtesy of Crane.Market

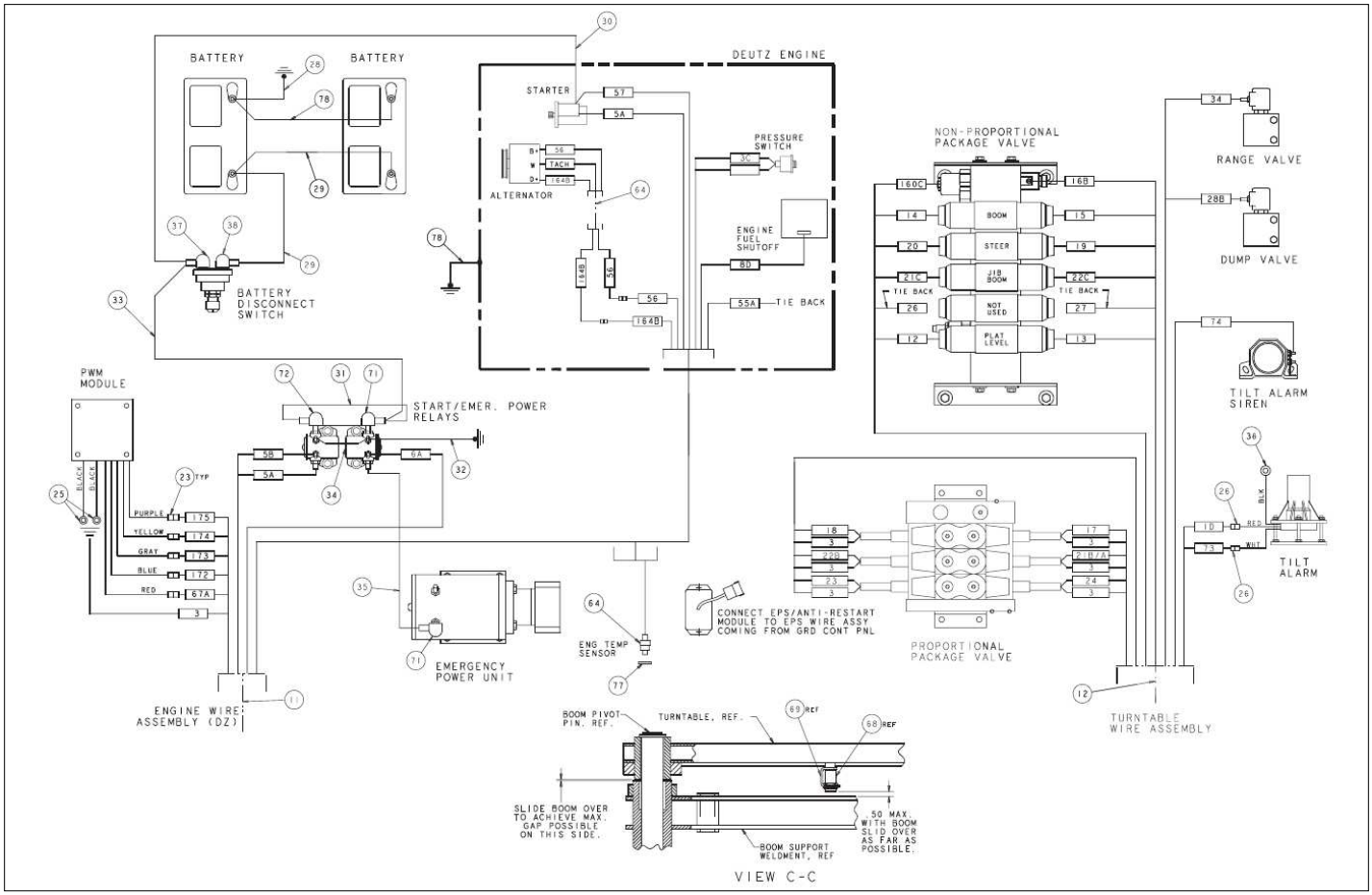

Courtesy of Crane.Market

Item	Part No.	Name	Qty	Uom
51	PNNA	NUT HEXHD .250-20 LKG	17	EA
52	PNNA	WSHR FLAT .250	16	EA
53	PNNA	BLT HEXHD .250-20 1.00 GR5	9	EA
54	PNNA	BLT HEXHD .250-20 .50 GR5	6	EA
55	PNNA	BLT HEXHD .250-20 .75 GR5	1	EA
56	PNNA	BLT HEXHD .375-15 1.50 GR5	2	EA
57	PNNA	NUT HEXHD .375-16 LKG	2	EA
58	PNNA	BLT HEXHD .375-16 1.00 GR5	2	EA
59	PNNA	WSHR LOCK .375 MDM	4	EA
60	PNNA	WSHR FLAT .375	4	EA
61	PNNA	BLT HEXHD .375-16 .75 GR5	1	EA
62	PNNA	WSHR FLAT .313	1	EA
63	PNNA	WSHR LOCK .313 MDM	1	EA
64	0074579	ALTERNATOR WIRE ASSY	1	EA
66	3044161	TERM R10I 16/14	1	EA
67	PNNA	BLT HEXHD .375-18 .50 GR5	2	EA
68	3020109	PROXIMITY SWITCH	1	EA
69	0081974	BRACKET, PROXIMITY SWITCH	1	EA
70	3046972	REPLACEMENT TERMINAL	3	EA
71	3040268	BOOT	2	EA
72	3040452	BOOT	1	EA
73	5093002	CLAMP	1	EA
74	3030122	ENG PROTECT MODULE 4-PNT HIGH- SETPOINTS A	1	EA
75	3070039	TEMP SENSOR M18 X 1.5 HIGH	1	EA
76	PNNA	SCR TRHD #6-32 .50	2	EA
77	5569837	WSHR FLAT M18 BR	1	EA
78	0075268	WIRE 2/0 R375 R375 13 BLK	2	EA

Courtesy of Crane.Market

ELECTRICAL

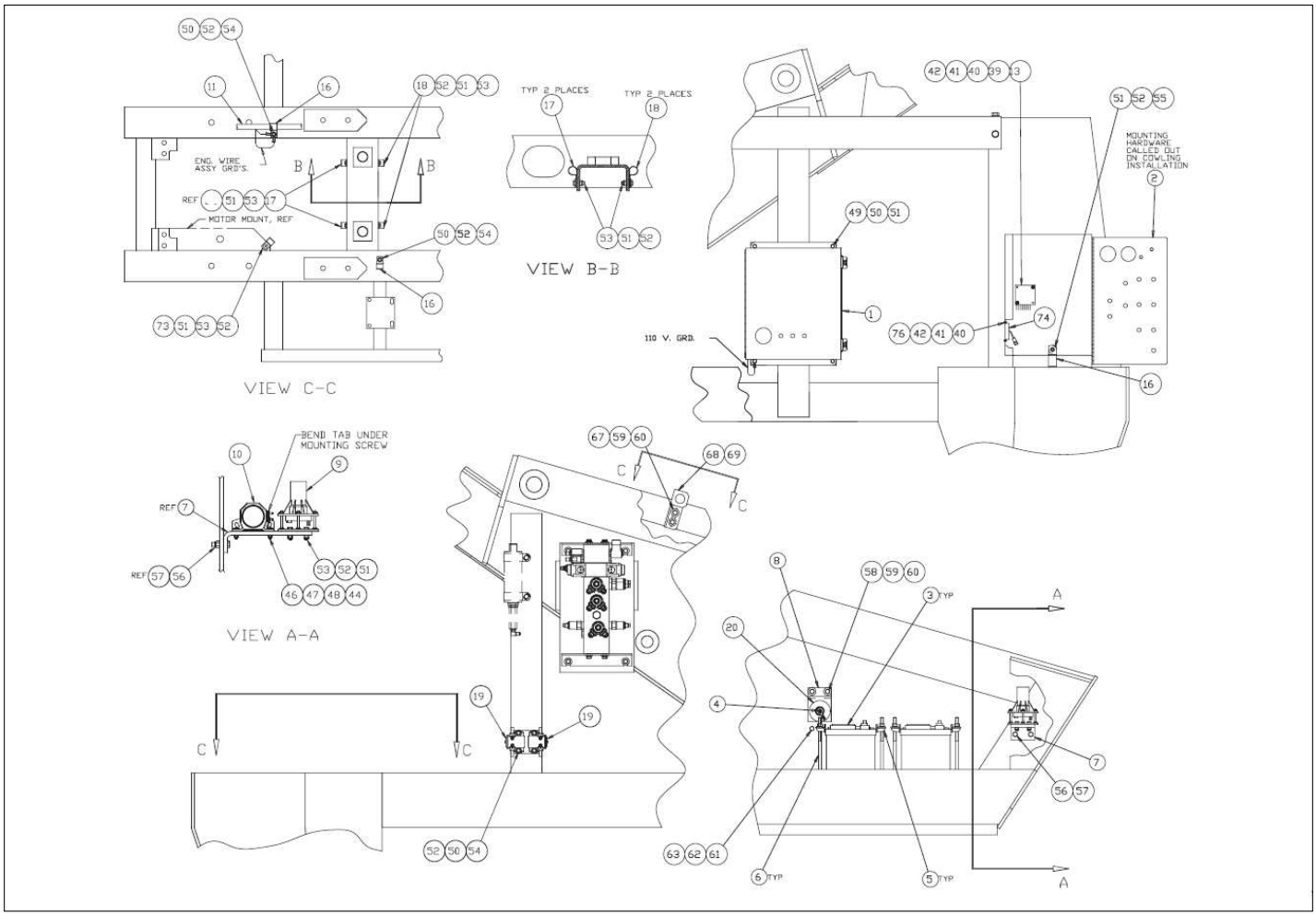

Courtesy of Crane.Market

Item	Part No.	Name	Qty	Uom
1	0081998	WIRING BOX SUB ASSY	1	EA
2	0083401	GROUND CONTROL PANEL SUB ASSY	1	EA
4	3020049	SW BATTERY DISCONNECT	1	EA
5	3050008	BATTERY HOLDDOWN	2	EA
6	3050004	BATTERY HOLDDOWN BOLT	4	EA
7	0181503	BRACKET, TILT ALARM	1	EA
8	0073051	BRACKET, BATTERY DISCONNECT	1	EA
9	3020040	TILT ALARM SENSOR	1	EA
10	480652	ALARM97DBA DUAL TONE 12/24V	1	EA
11	0083395	ENGINE WIRE ASSEMBLY-DEUTZ	1	EA
12	0084136	TURNTABLE WIRE ASSY	1	EA
13	322017028	PWM INSTL KIT TB60/66J – IF REPLACING APITECH MODULE WITH KARTECH	1	EA
Not Shown	IP3040534	INSTL PROC KARTECH	1	EA
Not Shown	3220164	CONTROLLER PWM MODULE 60-66 – IF REPLACING KARTECH MODULE WITH KARTECH	1	EA
Not Shown	0071812	WIRE 16 R10 FEM250FI 18	1	EA
Not Shown	3040046	TERM, .250 MALE SLIP-ON F.I. 22/18 WIRE	5	EA
Not Shown	974239	SCREW RHD #6-32 .50	2	EA
16	5093008	CLIP CUSSION 1.05 VINYL COATED	3	EA
17	5093004	CLAMP	2	EA
18	5093000	CLAMP	2	EA
19	3040506	SOLENOID	2	EA
20	0073089	PLACARD	1	EA

Courtesy of Crane.Market

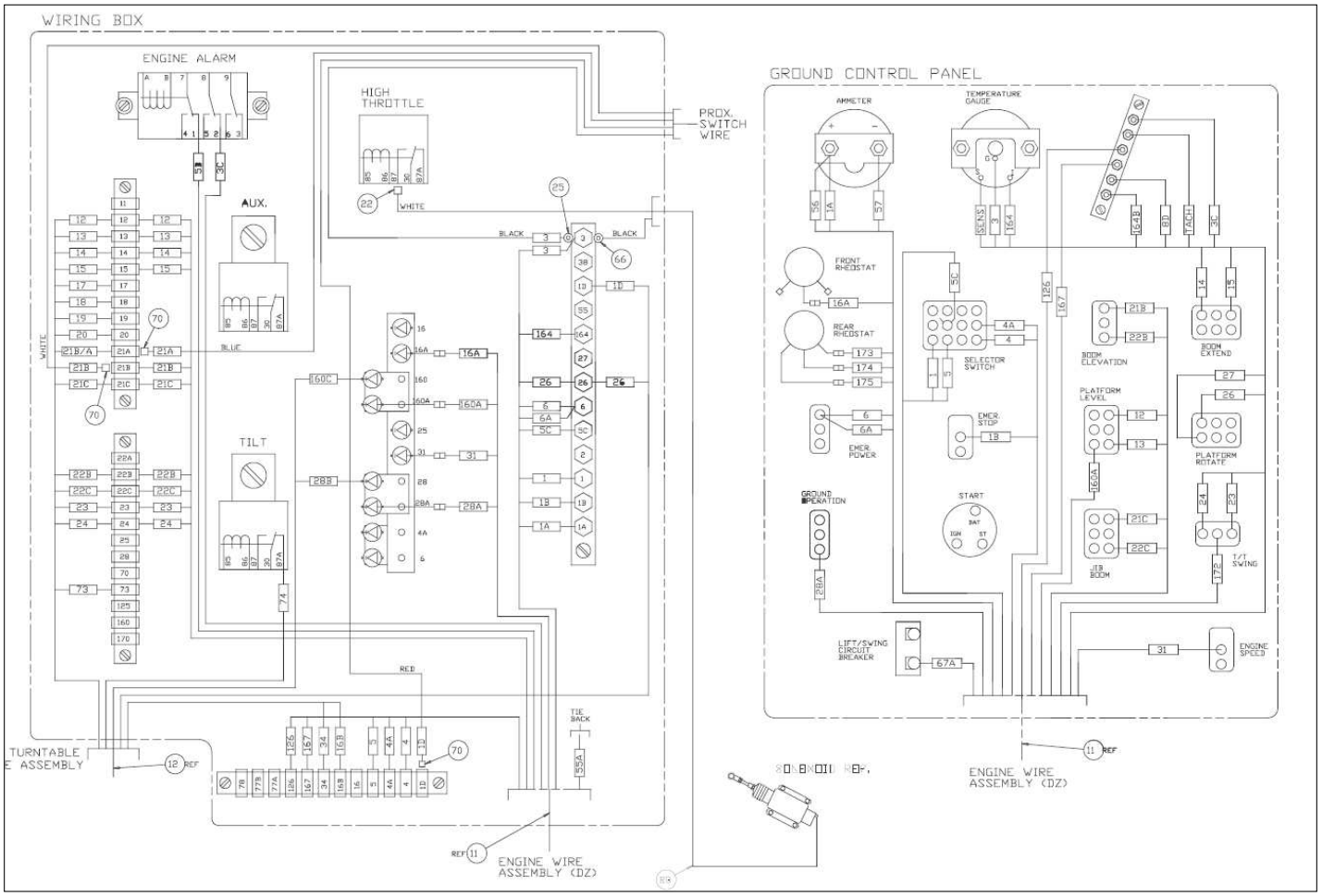

Courtesy of Crane.Market

Item	Part No.	Name	Qty	Uom
21	3040046	TERM, .250 MALE SLIP-ON F.I. 22/18 WIRE	2	EA
22	3049953	TERM FEM250FI 12/10	1	EA
23	3014710	TERM R10I 12/10	1	EA
25	3044146	TERM R10I 22/18	3	EA
26	3040082	TERM MALE250FI 16/14	4	EA
28	0080483	BATTERY WIRE	1	EA
29	0080484	WIRE 2/0 R375 R375 13 RED	2	EA
30	0080482	JUMPER WIRE	1	EA
31	0151372	JUMPER WIRE	1	EA
32	0151370	JUMPER WIRE	1	EA
33	0070705	BATTERY WIRE	1	EA
34	0151371	WIRE 16 R10 R10 5	1	EA
35	0090319	JUMPER WIRE	1	EA
36	3044162	TERM, 1/4 STUD INS. 16/14 WIRE	1	EA
37	3040270	BOOT BATTERY CABLE END Y-TYPE	1	EA
38	3040269	BOOT BTRY CABLE END BLK 1/0 GA	1	EA
39	PNNA	SCR RDHD #6-32 1.25 PLTD	2	EA
40	PNNA	NUT, #6-32 HEX	4	EA
41	PNNA	WSHR FLAT #6	4	EA
42	PNNA	WSHR LOCK #6	4	EA
44	PNNA	NUT HEXHD #10-24 LKG	2	EA
46	PNNA	SCR RDHD #10-24 1.00 PLTD	2	EA
47	PNNA	WSHR FLAT #10	2	EA
48	PNNA	WSHR STAR TOOTH #10	1	EA
49	PNNA	BLT HEXHD .250-20 .75 GR5	4	EA
50	PNNA	WSHR LOCK .250 MDM	10	EA
51	PNNA	NUT HEXHD .250-20 LKG	17	EA

Courtesy of Crane.Market

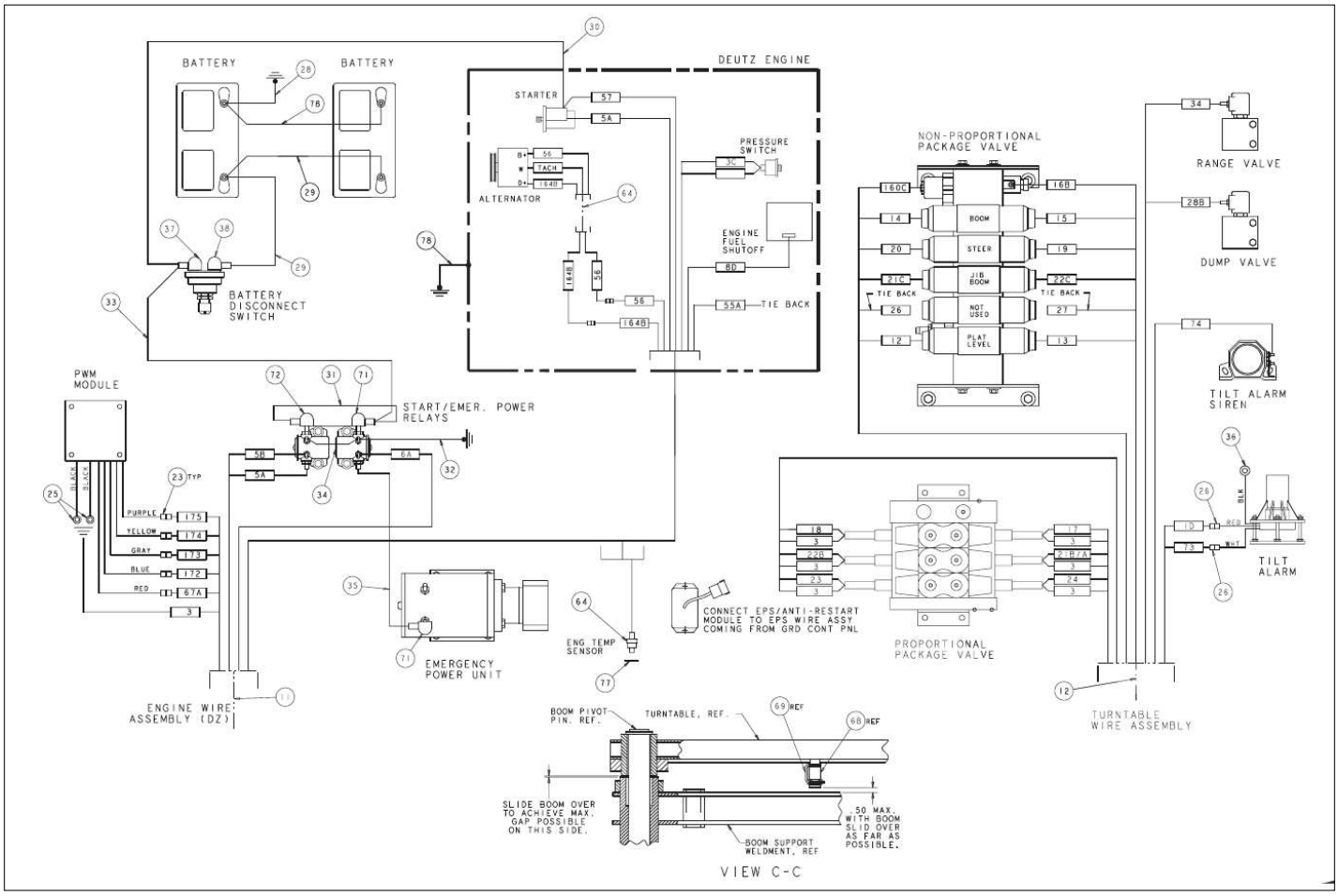

Courtesy of Crane.Market

Item	Part No.	Name	Qty	Uom
52	PNNA	WSHR FLAT .250	16	EA
53	PNNA	BLT HEXHD .250-20 1.00 GR5	9	EA
54	PNNA	BLT HEXHD .250-20 .50 GR5	6	EA
55	PNNA	BLT HEXHD .250-20 .75 GR5	1	EA
56	PNNA	BLT HEXHD .375-16 1.50 GR5	2	EA
57	PNNA	NUT HEXHD .375-16 LKG	2	EA
58	PNNA	BLT HEXHD .375-16 1.00 GR5	2	EA
59	PNNA	WSHR LOCK .375 MDM	4	EA
60	PNNA	WSHR FLAT .375	4	EA
61	PNNA	BLT HEXHD .375-16 .75 GR5	1	EA
62	PNNA	WSHR FLAT .313	1	EA
63	PNNA	WSHR LOCK .313 MDM	1	EA
64	0074579	ALTERNATOR WIRE ASSY	1	EA
66	3044854	REPLACEMENT TERMINAL	1	EA
67	PNNA	BLT HEXHD .375-18 .50 GR5	2	EA
68	3020109	PROXIMITY SWITCH	1	EA
69	0081974	BRACKET, PROXIMITY SWITCH	1	EA
70	3046972	REPLACEMENT TERMINAL	3	EA
71	3040268	BOOT	2	EA
72	3040452	BOOT	1	EA
73	5093002	CLAMP	1	EA
74	3030122	ENG PROTECT MODULE 4-PNT HIGH- SETPOINTS A	1	EA
75	3070039	TEMP SENSOR M18 X 1.5 HIGH	1	EA
76	PNNA	SCR TRHD #6-32 .50	2	EA
77	5569837	WSHR FLAT M18 BR	1	EA
78	0075268	WIRE 2/0 R375 R375 13 BLK	2	EA

Courtesy of Crane.Market

ELECTRICAL

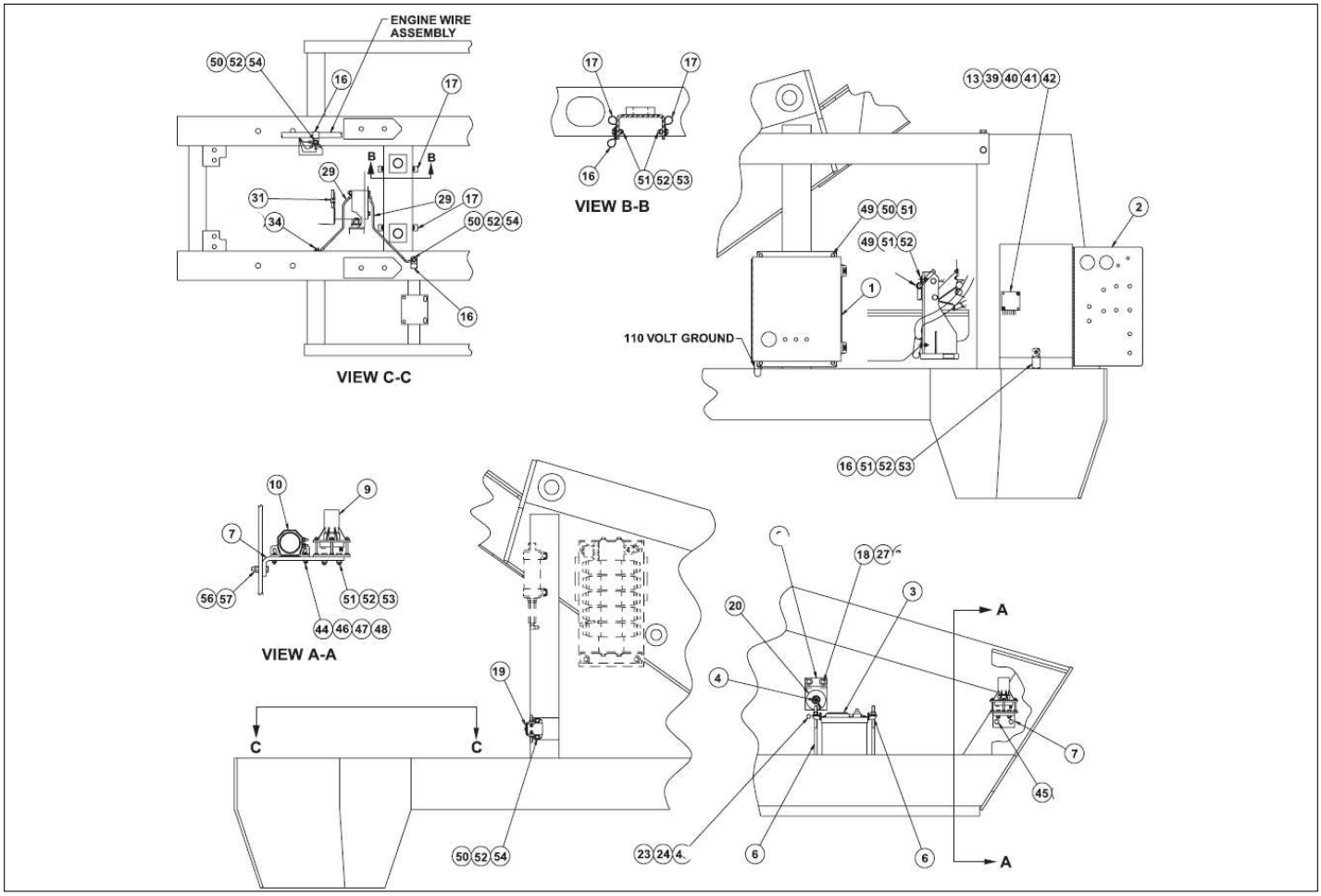

Courtesy of Crane.Market

Item	Part No.	Name	Qty	Uom
1	0082689	WIRING BOX SUB ASSY	1	EA
2	0082981	GROUND CONTROL PANEL SUB ASSY	1	EA
3	3050002	BATTERY	1	EA
4	3020049	SW BATTERY DISCONNECT	1	EA
5	3050008	BATTERY HOLDDOWN	1	EA
6	3050004	BATTERY HOLDDOWN BOLT	2	EA
7	0181503	BRACKET, TILT ALARM	1	EA
8	0073051	BRACKET, BATTERY DISCONNECT	1	EA
9	3020040	TILT ALARM SENSOR	1	EA
10	480652	ALARM97DBA DUAL TONE 12/24V	1	EA
11	0083922	ENGINE WIRE ASSEMBLY-FORD	1	EA
12	0081846	TURNTABLE WIRE ASSY-SIMPLIFIED HYDR	1	EA
13	322017028	PWM INSTL KIT TB60/66J – IF REPLACING APITECH MODULE WITH KARTECH	1	EA
Not Shown	IP3040534	INSTL PROC KARTECH	1	EA
Not Shown	3220164	CONTROLLER PWM MODULE 60-66 – IF REPLACING KARTECH MODULE WITH KARTECH	1	EA
Not Shown	0071812	WIRE 16 R10 FEM250FI 18	1	EA
Not Shown	3040046	TERM, .250 MALE SLIP-ON F.I. 22/18 WIRE	5	EA
Not Shown	974239	SCREW RHD #6-32 .50	2	EA
16	5093008	CLIP CUSSION 1.05 VINYL COATED	5	EA
17	5093004	CLAMP	4	EA
18	986299	BOLT HEXHD .313-18 2.50 GR. 5	5	EA

Courtesy of Crane.Market

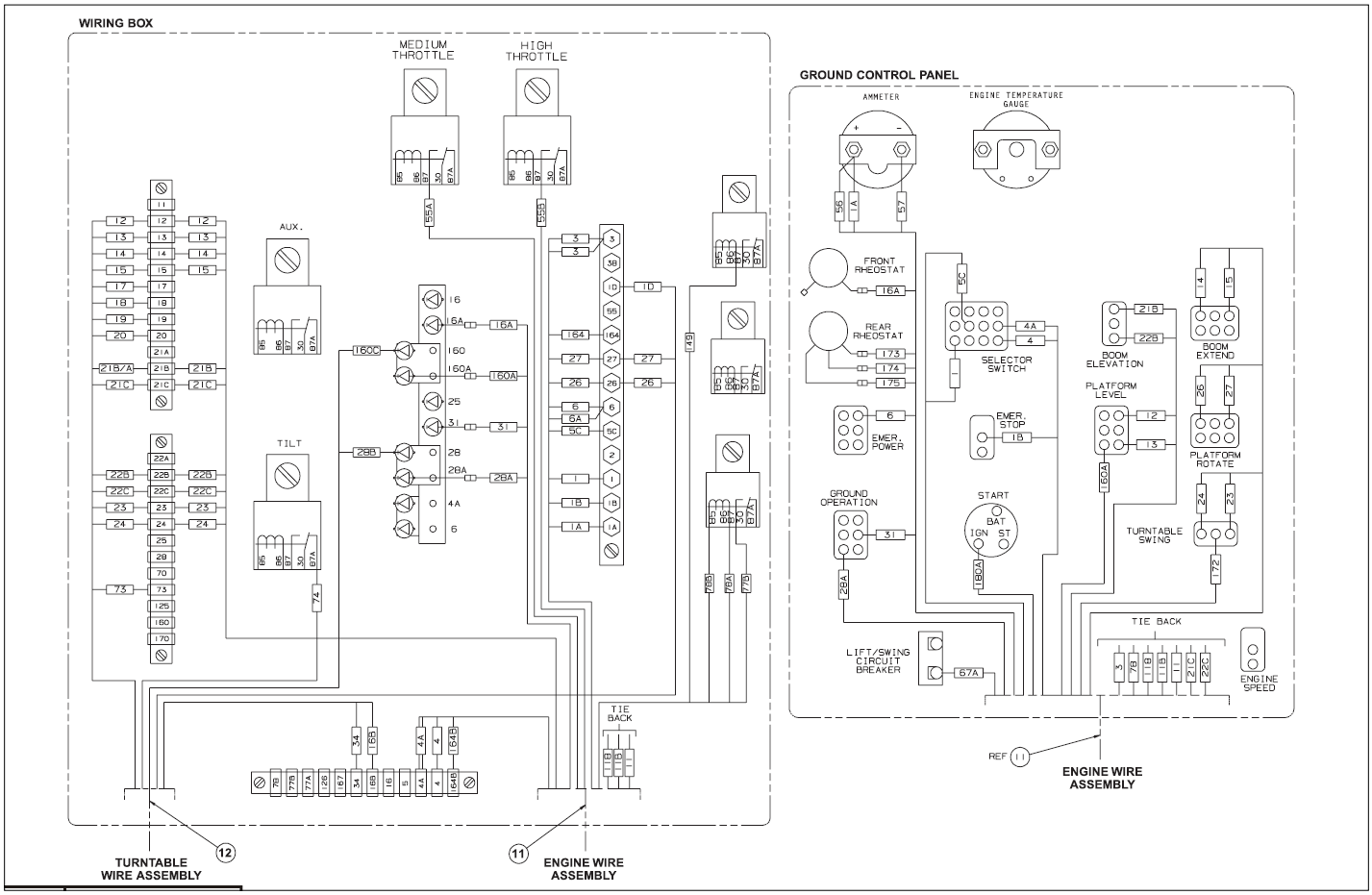

Courtesy of Crane.Market

Item	Part No.	Name	Qty	Uom
19	3040506	SOLENOID	1	EA
20	0073089	PLACARD	1	EA
22	3040268	BOOT	3	EA
23	987109	WASHER LOCK .313	1	EA
24	986269	WASHER 5/16 MEDIUM FLAT	1	EA
25	3044146	TERM R10I 22/18	3	EA
26	3040082	TERM MALE250FI 16/14	8	EA
27	987119	BOLT HEXHD .375-16 1.75 GR. 5	5	EA
28	0080483	BATTERY WIRE	1	EA
29	0080484	WIRE 2/0 R375 R375 13 RED	1	EA
30	0080482	JUMPER WIRE	1	EA
32	0151370	JUMPER WIRE	1	EA
33	0070705	BATTERY WIRE	1	EA
35	0090319	JUMPER WIRE	1	EA
36	3044162	TERM, 1/4 STUD INS. 16/14 WIRE	1	EA
37	3040270	BOOT BATTERY CABLE END Y-TYPE	1	EA
38	3040269	BOOT BTRY CABLE END BLK 1/0 GA	1	EA
39	974289	MACHINE SCREW #6-32 X 1-1/4 INCH LONG ROUND HEAD	2	EA
40	984009	NUT #6-32 HEX	2	EA
41	986159	WSHR FLAT 6	2	EA
42	987349	WSHR LOCK 6	2	EA
43	970239	BOLT HEXHD .313-18 .75 GR. 5	1	EA
44	5560034	NUT HEX LKG 10-24	4	EA
46	974709	SCREW RHD #10-24 X 1 PLATED	2	EA
47	986009	FLAT WASHER #10	2	EA
48	5560654	WASHER LOCK #10	1	EA

Courtesy of Crane.Market

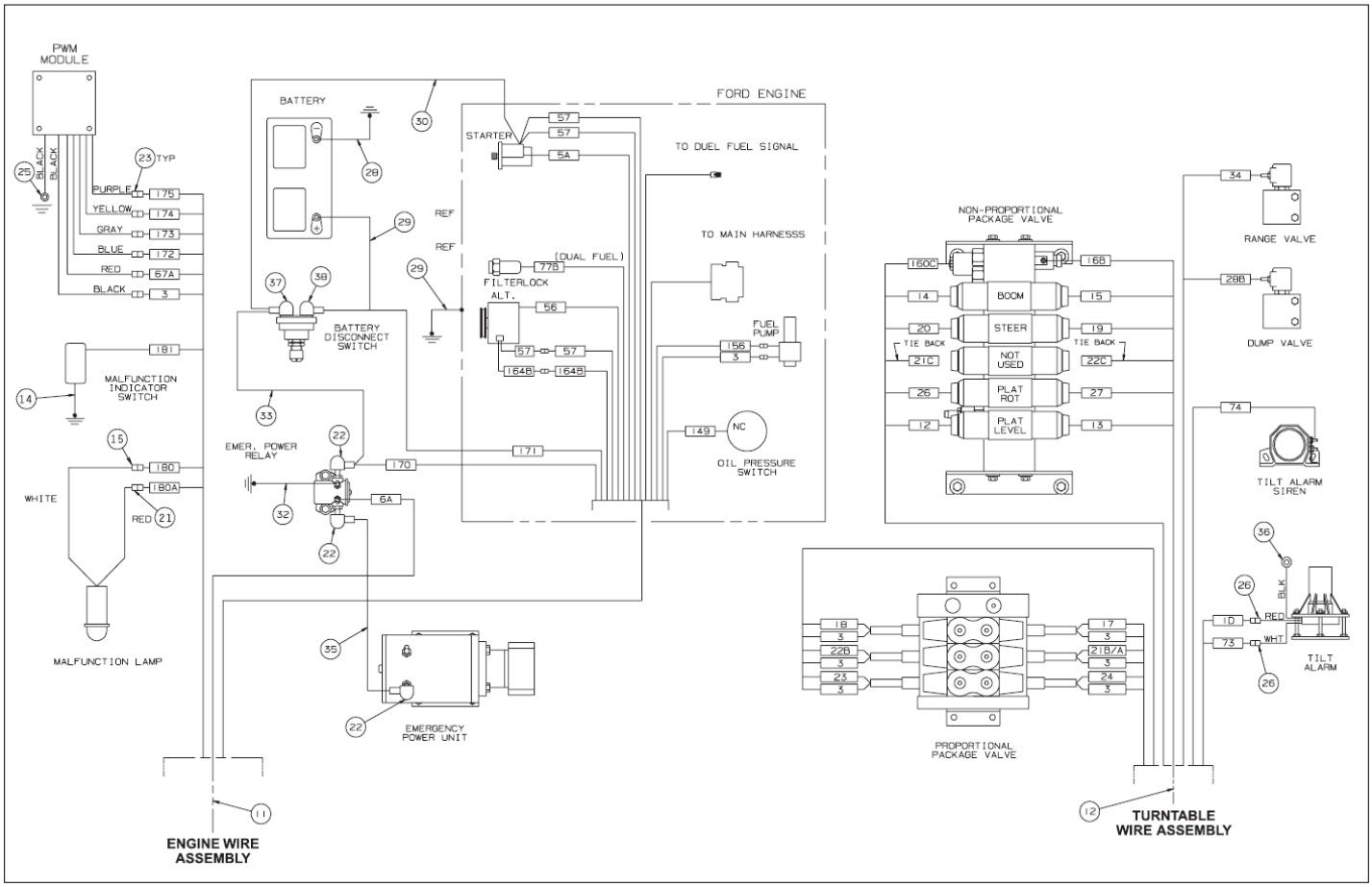

Courtesy of Crane.Market

Item	Part No.	Name	Qty	Uom
49	970029	CAPSCREW 1/4-20 X 3/4 INCH LONG HEX HEAD GRADE 5	5	EA
50	987099	WASHER LOCK .250	8	EA
51	5560004	NUT HEXHD .250-20 LKG	16	EA
52	986019	WASHER FLAT .250	14	EA
53	970049	BOLT HEXHD .250-20 1.00 GR. 5	10	EA
54	970009	BLT HEXHD .250-20 .500 GR5-	4	EA
55	970029	CAPSCREW 1/4-20 X 3/4 INCH LONG HEX HEAD GRADE 5	1	EA
56	970489	CAPSCREW 3/8-16 X 1-1/2 INCH LONG HEX HEAD GRADE 5	2	EA
57	5560033	NUT HEXHD .375-16 LKG	2	EA
58	970469	BOLT HEXHD .375-16 1.00 GR. 5	3	EA
61	5093006	CLAMP	1	EA
62	3040047	TERM FEM250FI 22/18	1	EA
63	3040046	TERM, .250 MALE SLIP-ON F.I. 22/18 WIRE	1	EA
64	0071563	WIRE 16 R81 R3131 7	1	EA
65	3046972	REPLACEMENT TERMINAL	2	EA
66	3020109	PROXIMITY SWITCH	1	EA
67	0081974	BRACKET, PROXIMITY SWITCH	1	EA
68	3020095	SWITCH PRESSURE 6 PSI 1/8-27NPT	1	EA
69	0075268	WIRE 2/0 R375 R375 13 BLK	1	EA

Courtesy of Crane.Market

ELECTRICAL

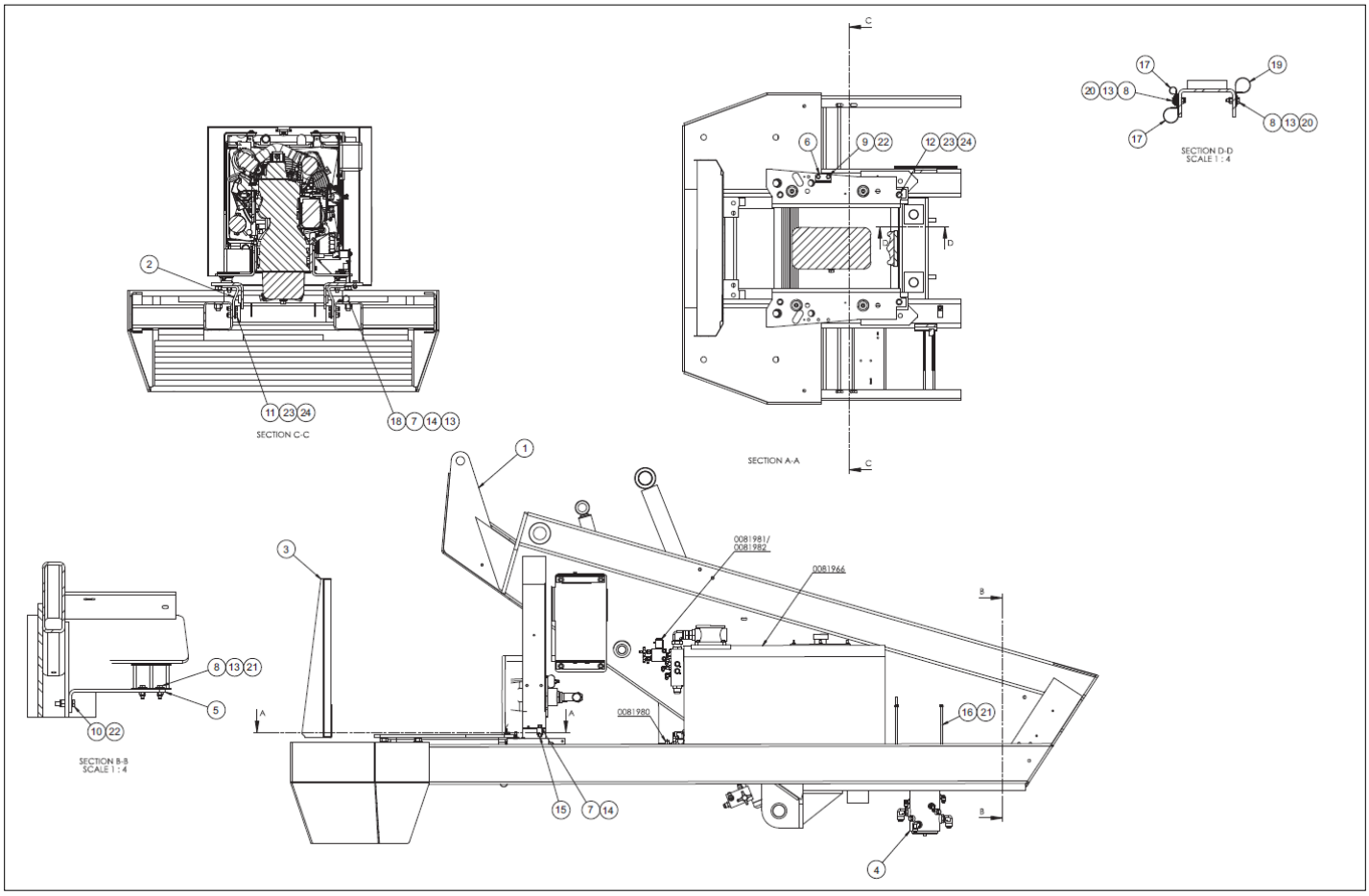

Courtesy of Crane.Market

Item	Part No.	Name	Qty	Uom
1	0082312	WELDMENT TURNTABLE TB60	1	EA
2	0083438	ENGINE MOUNT CUMMINGS	5	EA
3	0084708	KU V2403 ENGINE SUB ASSEMBLY	1	EA
4	0080054	LIFT/SWING/CW	1	EA
5	0181503	BRACKET, TILT ALARM	1	EA
6	0192289	BRKT, GLOW PLUG TIMER	1	EA
7	970009	BLT HEXHD .250-20 .500 GR5-	5	EA
8	970049	BOLT HEXHD .250-20 1.00 GR. 5	6	EA
9	970469	BOLT HEXHD .375-16 1.00 GR. 5	4	EA
10	970489	CAPSCREW 3/8-16 X 1-1/2 INCH LONG HEX HEAD GRADE 5	2	EA
11	970909	BOLT HEXHD .500-13 1.50 GR5	8	EA
12	970919	BLT HEXHD .500-13 1.75 GR5	4	EA
13	986019	WASHER FLAT .250	11	EA
14	987099	WASHER LOCK .250	5	EA
15	3040469	RELAY SPDT 12V 30AMP SONG	2	EA
16	3050004	BATTERY HOLDDOWN BOLT	2	EA
17	5093002	CLAMP	2	EA
18	5093008	CLIP CUSSION 1.05 VINYL COATED	3	EA
19	5093024	CLAMP	4	EA
20	5560004	NUT HEXHD .250-20 LKG	7	EA
21	5560031	NUT HEX LKG .313-18	2	EA
22	5560033	NUT HEXHD .375-16 LKG	4	EA
23	5560039	NUT LKG .500-13	12	EA
24	5560168	WSHR HARD FLAT .500 SP	12	EA
101	0070705	BATTERY WIRE	1	EA
102	0075268	WIRE 2/0 R375 R375 13 BLK	1	EA
103	0080482	JUMPER WIRE	1	EA

Courtesy of Crane.Market

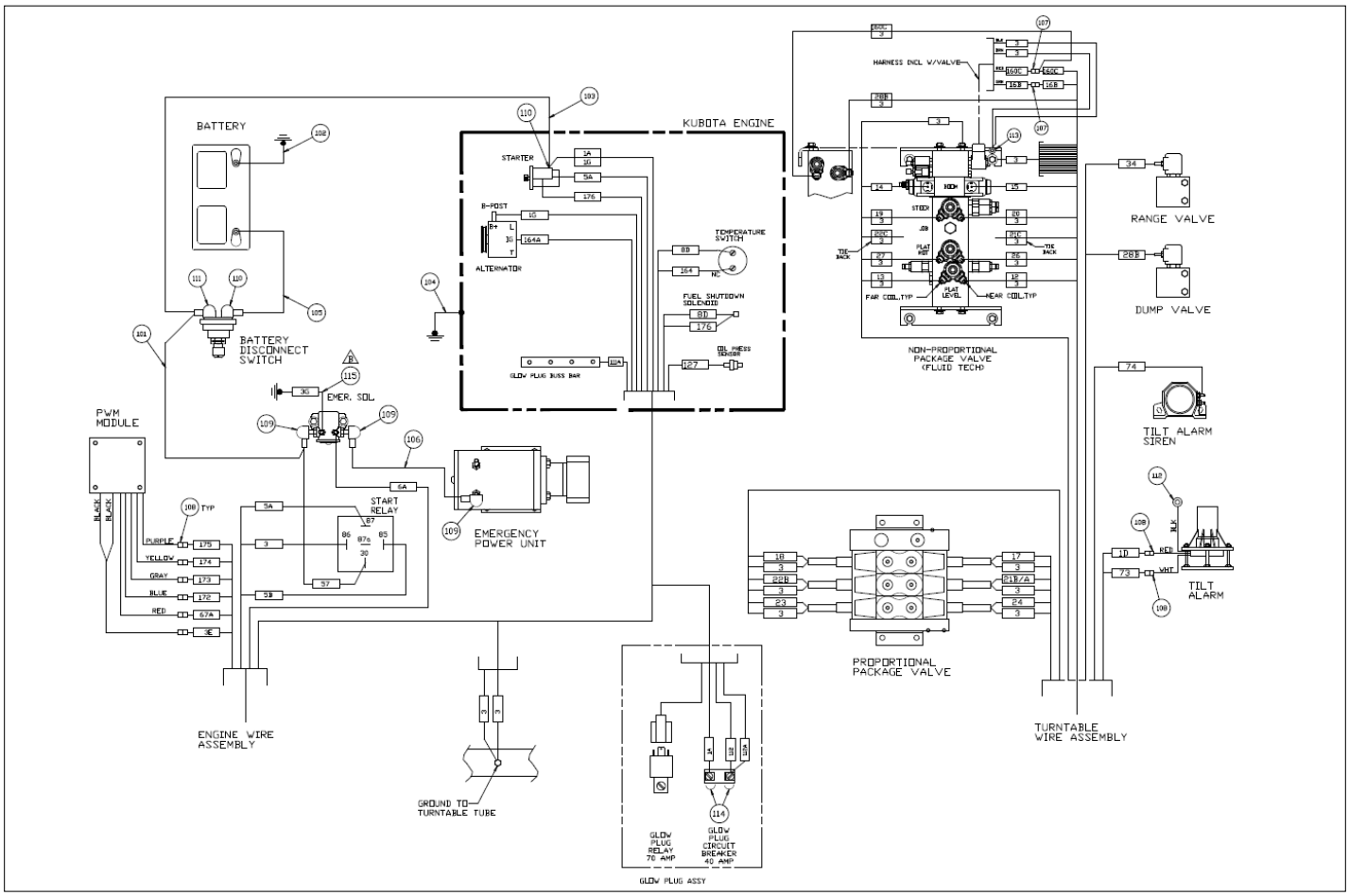

Courtesy of Crane.Market

Item	Part No.	Name	Qty	Uom
104	0080483	BATTERY WIRE	1	EA
105	0080484	WIRE 2/0 R375 R375 13 RED	1	EA
106	0090319	JUMPER WIRE	1	EA
107	3040046	TERM, .250 MALE SLIP-ON F.I. 22/18 WIRE	2	EA
108	3040082	TERM MALE250FI 16/14	8	EA
109	3040268	BOOT	3	EA
110	3040269	BOOT BTRY CABLE END BLK 1/0 GA	2	EA
111	3040270	BOOT BATTERY CABLE END Y-TYPE	1	EA
112	3044162	TERM, 1/4 STUD INS. 16/14 WIRE	1	EA
113	961089	TERM R101 16/14	1	EA
114	3040452	BOOT	2	EA
115	0071568	WIRE 12 R10I R250I 4	1	EA

Courtesy of Crane.Market

ELECTRICAL

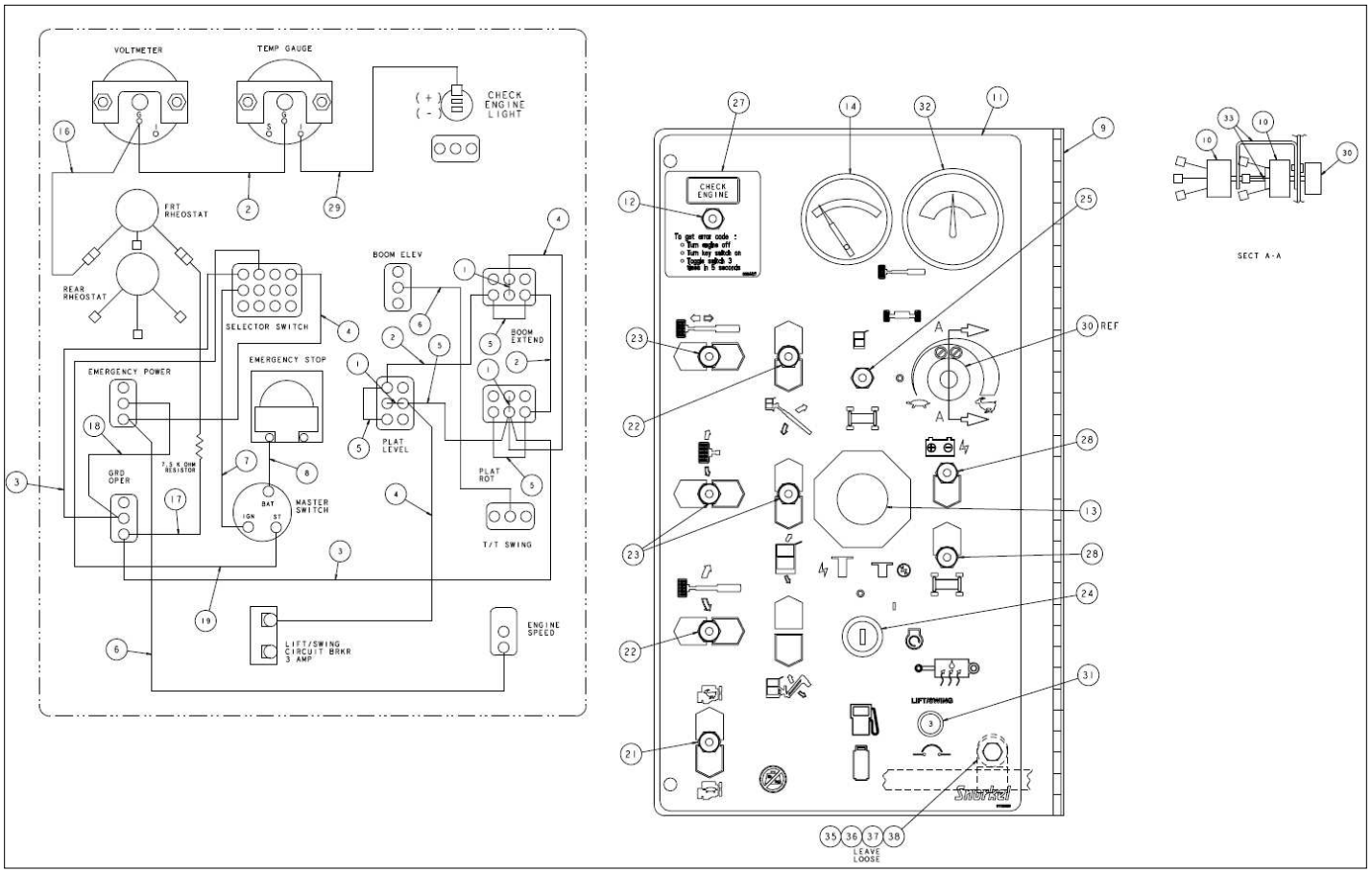

Courtesy of Crane.Market

Item	Part No.	Name	Qty	Uom
1	0060373	JUMPER, SWITCH TERMINAL STRAP	3	EA
2	0070730	WIRE 16 R61 R61 5.5	3	EA
3	0070742	WIRE 12 R61 R61 8-REV K	2	EA
4	0070746	WIRE 16 R61 R61 9	3	EA
5	0070747	WIRE 16 R61 R61 3	4	EA
6	0070753	WIRE 16 R61 R61 12	2	EA
7	0071541	WIRE 12 R61 R101 14	1	EA
8	0070735	WIRE 12 R 61 R101 24	1	EA
9	0074592	WLDMT GROUND CONTROL PANEL AND HINGE	1	EA
10	0082002	RHEOSTAT SUB ASSEMBLY	2	EA
11	0112559	PLACARD GROUND CONTROL	1	EA
12	3020015	SWITCH TOGGLE SPST MAIN/MOM	1	EA
13	3020020	SWITCH EMERGENCY STOP PUSH/PULL	1	EA
14	3070040	TEMPERATURE GAGUE	1	EA
16	0090757	WIRE 16 R61 FEM250FI 3	1	EA
17	0182202	WIRE 16 R6I F250FI 7 RSTR 7.5	1	EA
18	0181104	WIRE 12 R6 R6 6	1	EA
19	0151910	WIRE 16 R6 R10 14	1	EA
21	3020013	SWITCH TOGGLE SPST ON OFF SEALED	1	EA
22	3020016	SWITCH TOGGLE SPDT (ON) OFF (ON)	2	EA
23	3020018	SWITCH TOGGLE DPDT (ON) OFF (ON)	3	EA
24	3020087	KEY SWITCH SINGLE CODE	1	EA
25	3020048	SWITCH TOGGLE 4PDT (ON/ON) SELAED	1	EA
27	0084127	PLACARD, CHECK ENGINE	1	EA

Courtesy of Crane.Market

Item	Part No.	Name	Qty	Uom
28	3020080	SWITCH TOGGLE SPDT MOM/ON	2	EA
29	300804	WIRE 18 R8I F250FI 6	1	EA
30	3040348	KNOB RHEOSTAT	1	EA
31	3040535	CIRCUIT BREAKER 3AMP	1	EA
32	3072126	VOLTMETER	1	EA
33	3040620	COUPLER KIT	1	EA
35	5093006	CLAMP	1	EA
36	PNNA	CAPSCREW 1/4-20 X 3/4 LG	1	EA
37	PNNA	NUT 1/4-20 ESNA	1	EA
38	PNNA	1/4 FLAT WASHER	1	EA

Courtesy of Crane.Market

ELECTRICAL

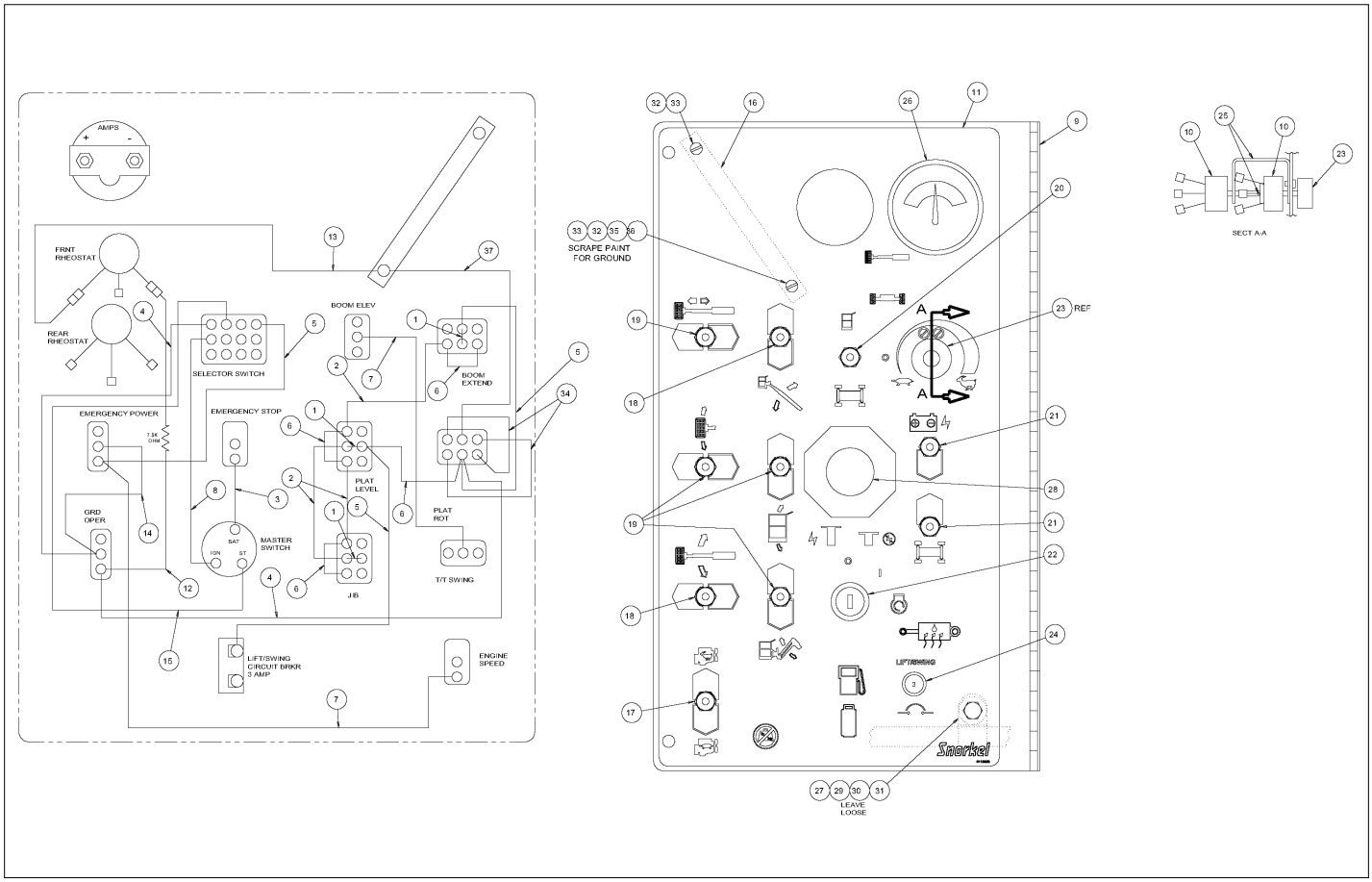

Courtesy of Crane.Market

Item	Part No.	Name	Qty	Uom
1	0060373	JUMPER, SWITCH TERMINAL STRAP	3	EA
2	0070730	WIRE 16 R61 R61 5.5	3	EA
3	0070735	WIRE 12 R 61 R101 24	1	EA
4	0070742	WIRE 12 R61 R61 8-REV K	2	EA
5	0070746	WIRE 16 R61 R61 9	3	EA
6	0070747	WIRE 16 R61 R61 3	4	EA
7	0070753	WIRE 16 R61 R61 12	2	EA
8	0071541	WIRE 12 R61 R101 14	1	EA
9	0074592	WLDMT GROUND CONTROL PANEL AND HINGE	1	EA
10	0082002	RHEOSTAT SUB ASSEMBLY	2	EA
11	0112559	PLACARD GROUND CONTROL	1	EA
12	0182202	WIRE 16 R6I F250FI 7 RSTR 7.5	1	EA
13	0071555	WIRE 16 R1OI FEM250I 6	1	EA
14	0181104	WIRE 12 R6 R6 6	1	EA
15	0151910	WIRE 16 R6 R10 14	1	EA
16	300489	TERMINAL STRIP #10 STUD 6 CIR	1	EA
17	3020013	SWITCH TOGGLE SPST ON OFF SEALED	1	EA
18	3020016	SWITCH TOGGLE SPDT (ON) OFF (ON)	2	EA
19	3020018	SWITCH TOGGLE DPDT (ON) OFF (ON)	4	EA
20	3020048	SWITCH TOGGLE 4PDT (ON/ON) SELAED	1	EA
21	3020080	SWITCH TOGGLE SPDT MOM/ON	2	EA
22	3020087	KEY SWITCH SINGLE CODE	1	EA
23	3040348	KNOB RHEOSTAT	1	EA
24	3040535	CIRCUIT BREAKER 3AMP	1	EA
25	3040620	COUPLER KIT	1	EA

Courtesy of Crane.Market

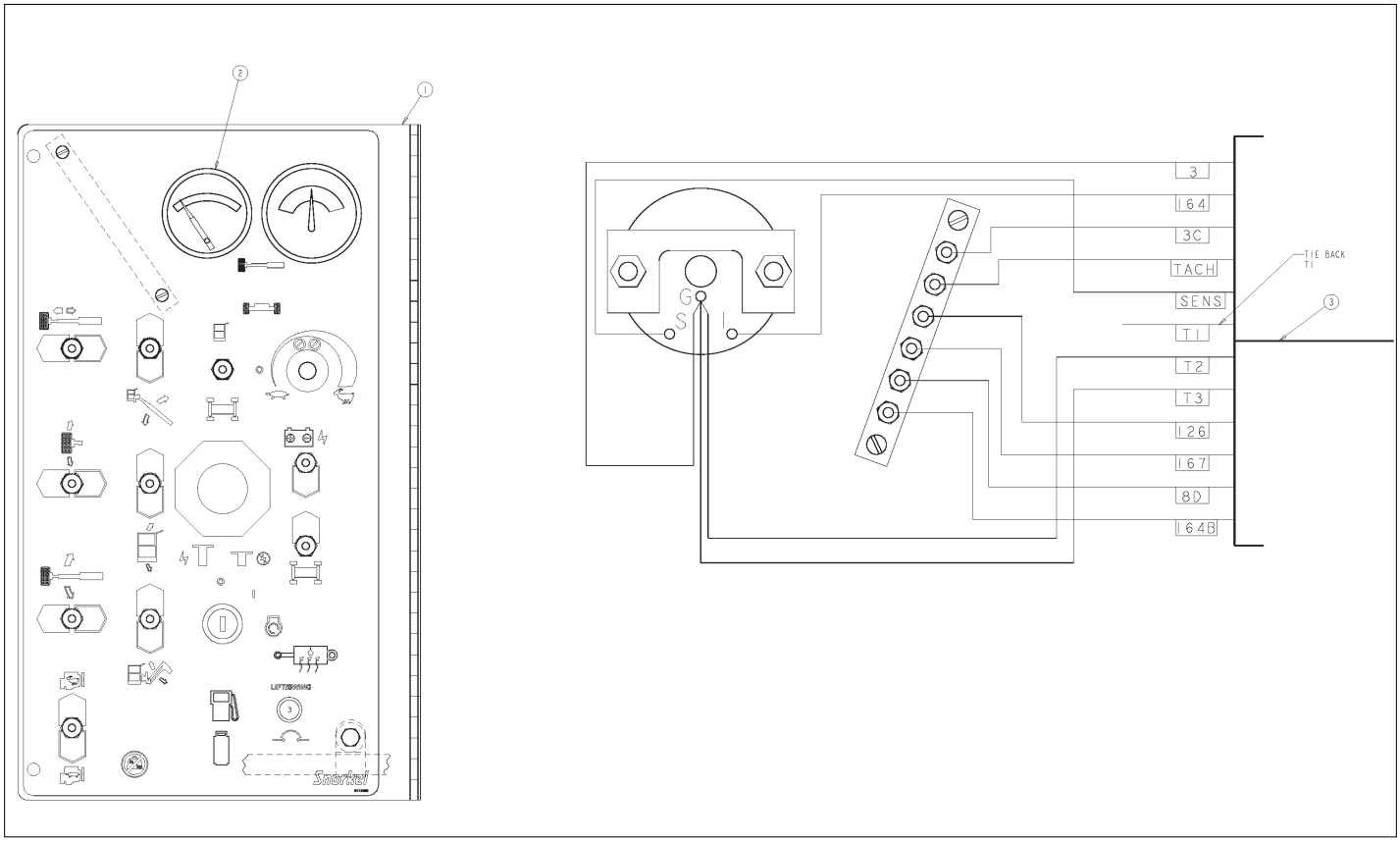

Courtesy of Crane.Market

Item	Part No.	Name	Qty	Uom
26	3070003	AMMETER	1	EA
27	5093006	CLAMP	1	EA
28	3020020	SWITCH EMERGENCY STOP PUSH/PULL	1	EA
29	970029	CAPSCREW 1/4-20 X 3/4 INCH LONG HEX HEAD GRADE 5	1	EA
30	5560004	NUT HEXHD .250-20 LKG	1	EA
31	986019	WASHER FLAT .250	1	EA
32	5560673	MACHINE SCREW #10-24NC X 1" LG	2	EA
33	5560034	NUT HEX LKG 10-24	2	EA
34	0071583	WIRE 12 R8I R8I 5	2	EA
35	987089	#10 LOCK WASHER	1	EA
36	984049	NUT, #10-24 HEX	1	EA
37	0071565	WIRE 12 R10I R6I 8	1	EA

Courtesy of Crane.Market

ELECTRICAL

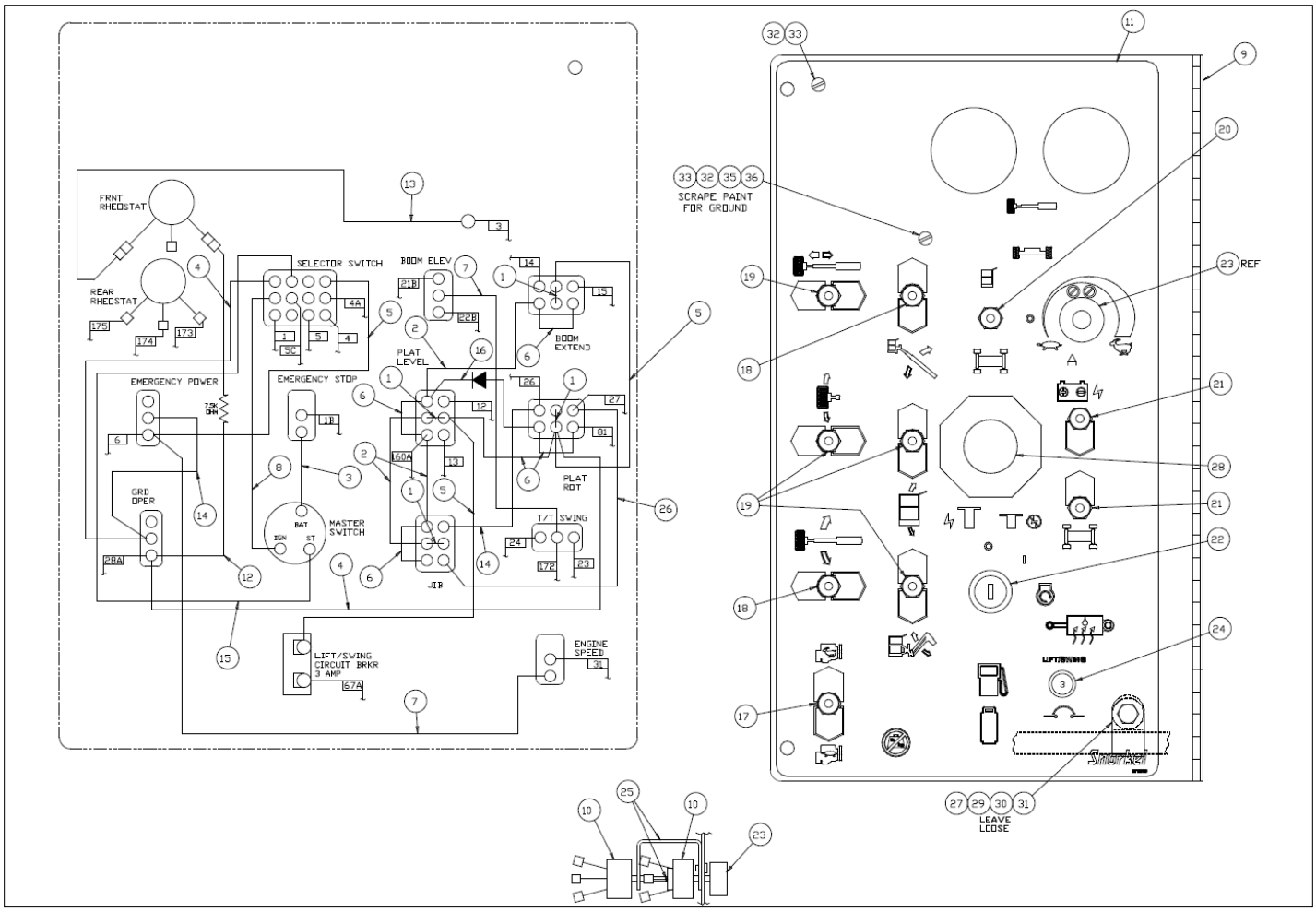

Courtesy of Crane.Market

Item	Part No.	Name	Qty	Uom
1	0060373	JUMPER, SWITCH TERMINAL STRAP	4	EA
2	0070730	WIRE 16 R61 R61 5.5	3	EA
3	0070735	WIRE 12 R 61 R101 24	1	EA
4	0070742	WIRE 12 R61 R61 8-REV K	2	EA
5	0070746	WIRE 16 R61 R61 9	3	EA
6	0070747	WIRE 16 R61 R61 3	5	EA
7	0070753	WIRE 16 R61 R61 12	2	EA
8	0071541	WIRE 12 R61 R101 14	1	EA
9	0074592	WLDMT GROUND CONTROL PANEL AND HINGE	1	EA
10	0082002	RHEOSTAT SUB ASSEMBLY	2	EA
11	0112559	PLACARD GROUND CONTROL	1	EA
12	0182202	WIRE 16 R6I F250FI 7 RSTR 7.5	1	EA
13	0071555	WIRE 16 R1OI FEM250I 6	1	EA
14	0181104	WIRE 12 R6 R6 6	2	EA
15	0151910	WIRE 16 R6 R10 14	1	EA
16	0111477	WIRE 16 R61 R61 10 DIO	1	EA
17	3020013	SWITCH TOGGLE SPST ON OFF SEALED	1	EA
18	3020016	SWITCH TOGGLE SPDT (ON) OFF (ON)	2	EA
19	3020018	SWITCH TOGGLE DPDT (ON) OFF (ON)	4	EA
20	3020048	SWITCH TOGGLE 4PDT (ON/ON) SELAED	1	EA
21	3020080	SWITCH TOGGLE SPDT MOM/ON	2	EA
22	3020087	KEY SWITCH SINGLE CODE	1	EA
23	3040348	KNOB RHEOSTAT	1	EA
24	3040535	CIRCUIT BREAKER 3AMP	1	EA
25	3040620	COUPLER KIT	1	EA

Courtesy of Crane.Market

Item	Part No.	Name	Qty	Uom
26	0071588	WIRE 12 R61 R81 10	1	EA
27	5093006	CLAMP	1	EA
28	3020020	SWITCH EMERGENCY STOP PUSH/PULL	1	EA
29	970029	CAPSCREW 1/4-20 X 3/4 INCH LONG HEX HEAD GRADE 5	1	EA
30	5560004	NUT HEXHD .250-20 LKG	1	EA
31	986019	WASHER FLAT .250	1	EA
32	5560673	MACHINE SCREW #10-24NC X 1" LG	2	EA
33	5560034	NUT HEX LKG 10-24	2	EA
35	987089	#10 LOCK WASHER	1	EA
36	984049	NUT, #10-24 HEX	1	EA

Courtesy of Crane.Market

ELECTRICAL

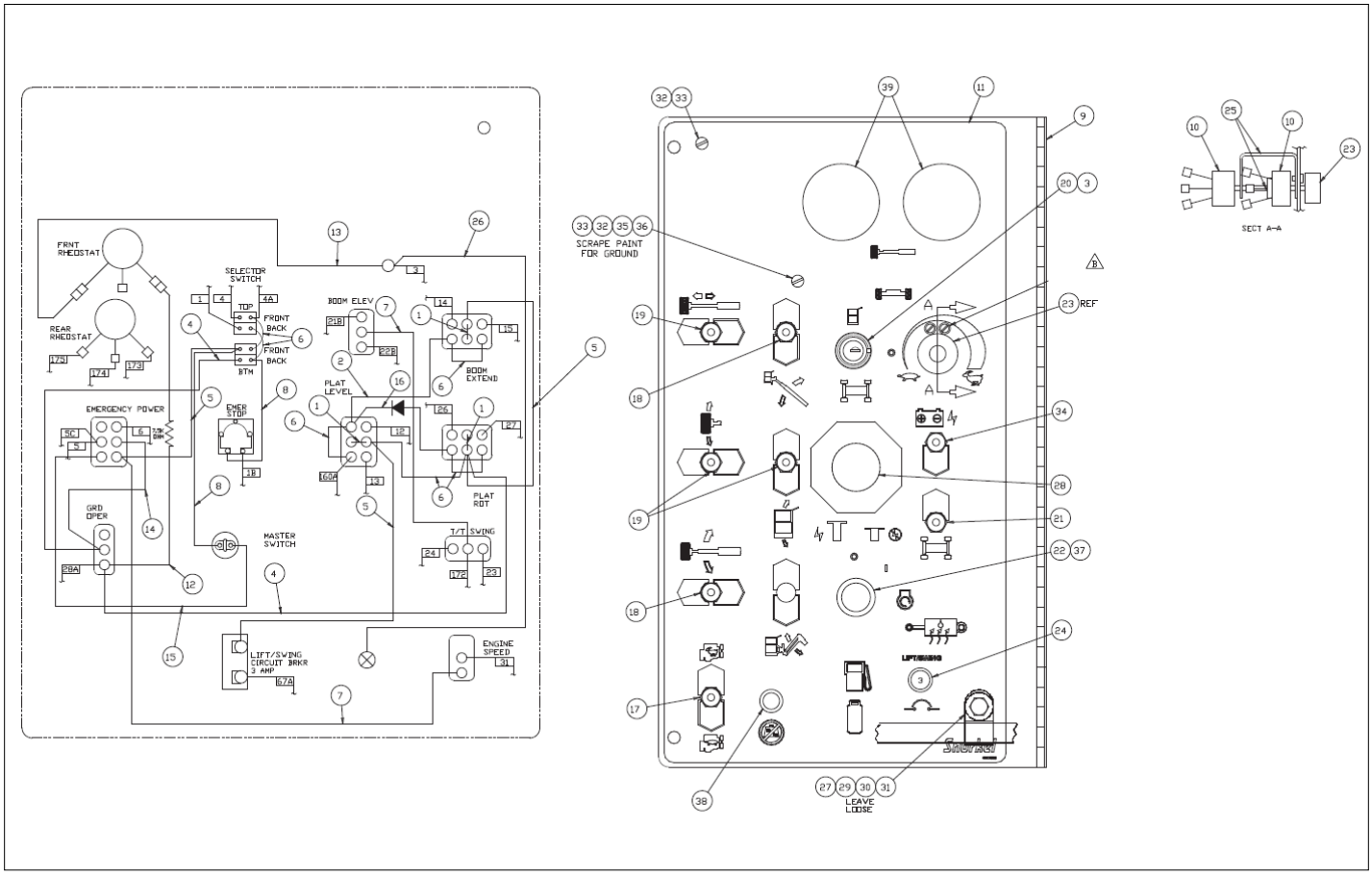

Courtesy of Crane.Market

Item	Part No.	Name	Qty	Uom
1	0060373	JUMPER, SWITCH TERMINAL STRAP	3	EA
2	0070730	WIRE 16 R61 R61 5.5	1	EA
3	3028814	CONTACT BLOCK NO	2	EA
4	0070742	WIRE 12 R61 R61 8-REV K	2	EA
5	0070746	WIRE 16 R61 R61 9	3	EA
6	0070747	WIRE 16 R61 R61 3	6	EA
7	0070753	WIRE 16 R61 R61 12	2	EA
8	0071541	WIRE 12 R61 R101 14	2	EA
9	0084181	WELDMENT CONTROL PANEL SB66J	1	EA
10	0082002	RHEOSTAT SUB ASSEMBLY	2	EA
11	0112559	PLACARD GROUND CONTROL	1	EA
12	0182202	WIRE 16 R6I F250FI 7 RSTR 7.5	1	EA
13	0071555	WIRE 16 R1OI FEM250I 6	1	EA
14	0181104	WIRE 12 R6 R6 6	1	EA
15	0240483	WIRE 16 R61 R101 8	1	EA
16	0111477	WIRE 16 R61 R61 10 DIO	1	EA
17	3020013	SWITCH TOGGLE SPST ON OFF SEALED	1	EA
18	3020016	SWITCH TOGGLE SPDT (ON) OFF (ON)	2	EA
19	3020018	SWITCH TOGGLE DPDT (ON) OFF (ON)	3	EA
20	3028832	SELECTOR SWITCH	1	EA
21	3020080	SWITCH TOGGLE SPDT MOM/ON	1	EA
22	3026027	SW PUSH BUTTON	1	EA
23	3040348	KNOB RHEOSTAT	1	EA
24	3040535	CIRCUIT BREAKER 3AMP	1	EA
25	3040620	COUPLER KIT	1	EA
26	0071588	WIRE 12 R61 R81 10	1	EA

Courtesy of Crane.Market

Item	Part No.	Name	Qty	Uom
27	5093006	CLAMP	1	EA
28	3020020	SWITCH EMERGENCY STOP PUSH/PULL	1	EA
29	970029	CAPSCREW 1/4-20 X 3/4 INCH LONG HEX HEAD GRADE 5	1	EA
30	5560004	NUT HEXHD .250-20 LKG	1	EA
31	986019	WASHER FLAT .250	1	EA
32	5560673	MACHINE SCREW #10-24NC X 1" LG	2	EA
33	5560034	NUT HEX LKG 10-24	2	EA
34	3020081	SWITCH TOGGLE DPDT (M/NONE/ON) SEALED	1	EA
35	987089	#10 LOCK WASHER	1	EA
36	984049	NUT, #10-24 HEX	1	EA
37	7140092	SEAL KIT 600-0002-5/8	2	EA
38	3069524	LIGHT, RED LED 12V .69 DIA	1	EA
39	583406	PLUG HOLE 2.00 DIA PLASTIC	2	EA

Courtesy of Crane.Market

ELECTRICAL

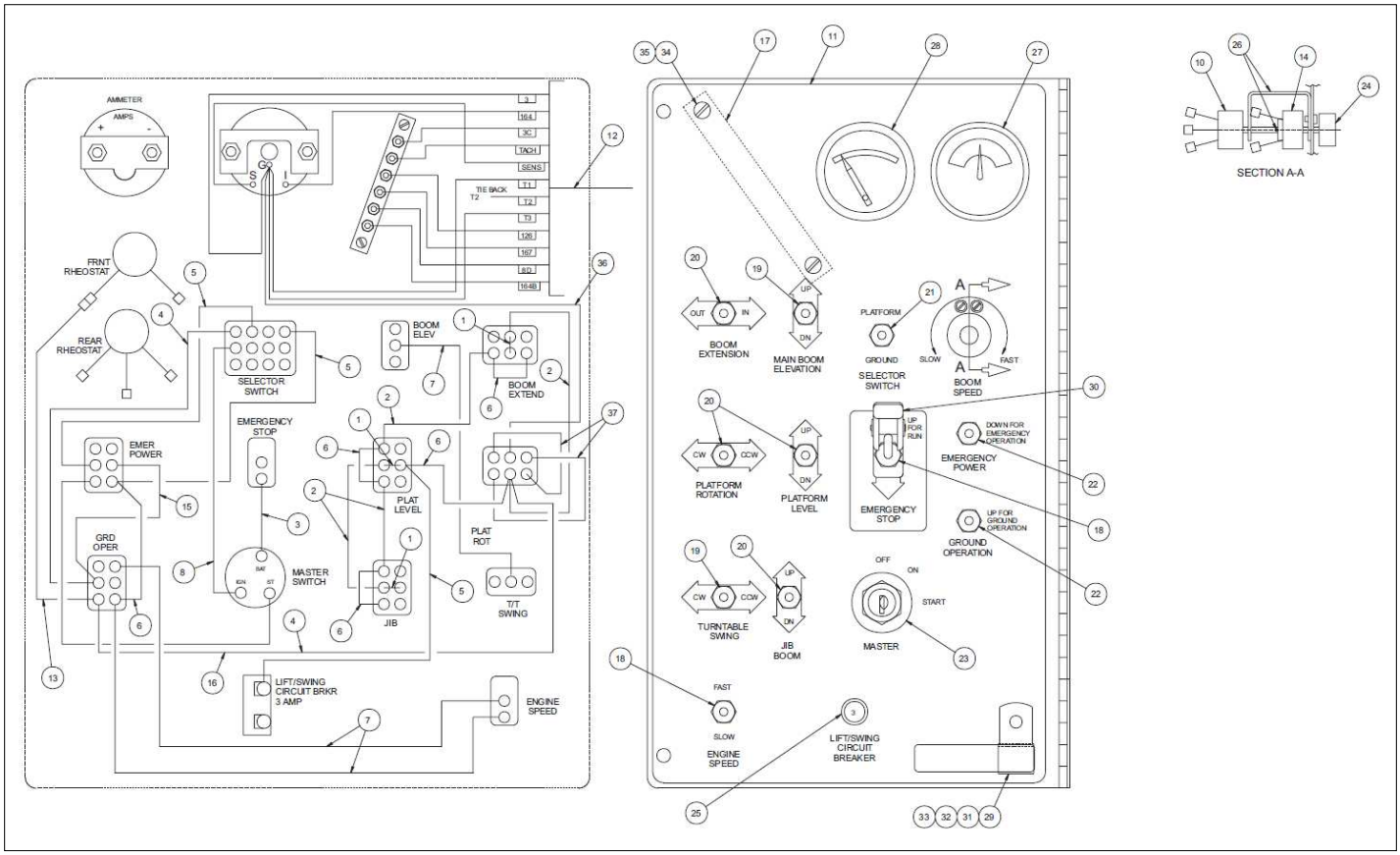

Courtesy of Crane.Market

Item	Part No.	Name	Qty	Uom
1	0060373	JUMPER, SWITCH TERMINAL STRAP	3	EA
2	0070730	WIRE 16 R61 R61 5.5	4	EA
3	0070735	WIRE 12 R 61 R101 24	1	EA
4	0070742	WIRE 12 R61 R61 8-REV K	2	EA
5	0070746	WIRE 16 R61 R61 9	4	EA
6	0070747	WIRE 16 R61 R61 3	5	EA
7	0070753	WIRE 16 R61 R61 12	3	EA
8	0071541	WIRE 12 R61 R101 14	1	EA
9	0074585	LOWER CONTROL PANEL AND HINGE	1	EA
10	0082002	RHEOSTAT SUB ASSEMBLY	1	EA
Not Shown	3040619	REPLACEMENT SWITCH	1	EA
Not Shown	0150647	REPLACEMENT JUMPER WIRE	1	EA
11	0081845	PLACARD, LOWER CONTROLS	1	EA
12	0083300	EPS WIRE ASSEMBLY	1	EA
13	0090757	WIRE 16 R61 FEM250FI 3	1	EA
14	0180949	RHEOSTAT	1	EA
Not Shown	3040497	REPLACEMENT SWITCH	1	EA
15	0181104	WIRE 12 R6 R6 6	1	EA
16	0240483	WIRE 16 R61 R101 8	1	EA
17	300489	TERMINAL STRIP #10 STUD 6 CIR	1	EA
18	3020013	SWITCH TOGGLE SPST ON OFF SEALED	2	EA
19	3020016	SWITCH TOGGLE SPDT (ON) OFF (ON)	2	EA
20	3020018	SWITCH TOGGLE DPDT (ON) OFF (ON)	4	EA
21	3020048	SWITCH TOGGLE 4PDT (ON/ON) SELAED	1	EA

Courtesy of Crane.Market

Item	Part No.	Name	Qty	Uom
22	3020081	SWITCH TOGGLE DPDT (M/NONE/ON) SEALED	2	EA
23	3020087	KEY SWITCH SINGLE CODE	1	EA
Not Shown	8030044	SPARE KEY FOR #3020087	1	EA
24	3040348	KNOB RHEOSTAT	1	EA
25	3040535	CIRCUIT BREAKER 3AMP	1	EA
26	3040620	COUPLER KIT	1	EA
27	3070003	AMMETER	1	EA
28	3070040	TEMPERATURE GAGUE	1	EA
29	5093006	CLAMP	1	EA
30	562236	GUARD, EMERGENCY STOP SWITCH	1	EA
31	970029	CAPSCREW 1/4-20 X 3/4 INCH LONG HEX HEAD GRADE 5	1	EA
32	5560004	NUT HEXHD .250-20 LKG	1	EA
33	986019	WASHER FLAT .250	1	EA
34	5569845	MACHINE SCREW #10-24 X 1 INCH LONG HEX HEAD GRADE 5	2	EA
35	5560034	NUT HEX LKG 10-24	2	EA
36	0071589	JUMPER WIRE	1	EA
37	0071583	WIRE 12 R8I R8I 5	2	EA

Courtesy of Crane.Market

ELECTRICAL

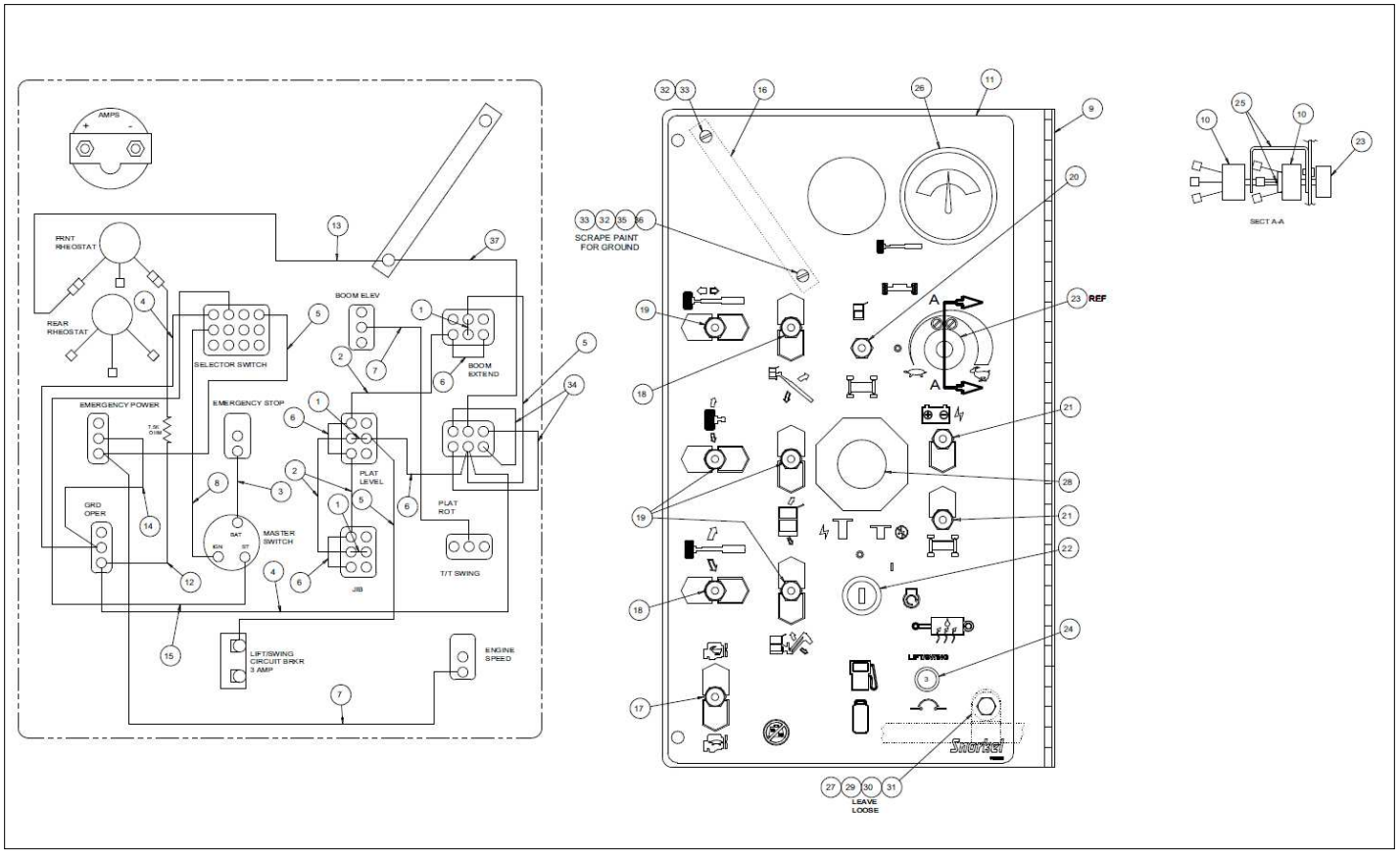

Courtesy of Crane.Market

Item	Part No.	Name	Qty	Uom
1	0060373	JUMPER, SWITCH TERMINAL STRAP	3	EA
2	0070730	WIRE 16 R61 R61 5.5	3	EA
3	0070735	WIRE 12 R 61 R101 24	1	EA
4	0070742	WIRE 12 R61 R61 8-REV K	2	EA
5	0070746	WIRE 16 R61 R61 9	3	EA
6	0070747	WIRE 16 R61 R61 3	4	EA
7	0070753	WIRE 16 R61 R61 12	2	EA
8	0071541	WIRE 12 R61 R101 14	1	EA
9	0074592	WLDMT GROUND CONTROL PANEL AND HINGE	1	EA
10	0082002	RHEOSTAT SUB ASSEMBLY	2	EA
11	0112559	PLACARD GROUND CONTROL	1	EA
12	0182202	WIRE 16 R6I F250FI 7 RSTR 7.5	1	EA
13	0071555	WIRE 16 R1OI FEM250I 6	1	EA
14	0181104	WIRE 12 R6 R6 6	1	EA
15	0151910	WIRE 16 R6 R10 14	1	EA
16	300489	TERMINAL STRIP #10 STUD 6 CIR	1	EA
17	3020013	SWITCH TOGGLE SPST ON OFF SEALED	1	EA
18	3020016	SWITCH TOGGLE SPDT (ON) OFF (ON)	2	EA
19	3020018	SWITCH TOGGLE DPDT (ON) OFF (ON)	4	EA
20	3020048	SWITCH TOGGLE 4PDT (ON/ON) SELAED	1	EA
21	3020080	SWITCH TOGGLE SPDT MOM/ON	2	EA
22	3020087	KEY SWITCH SINGLE CODE	1	EA
23	3040348	KNOB RHEOSTAT	1	EA
24	3040535	CIRCUIT BREAKER 3AMP	1	EA
25	3040620	COUPLER KIT	1	EA

Courtesy of Crane.Market

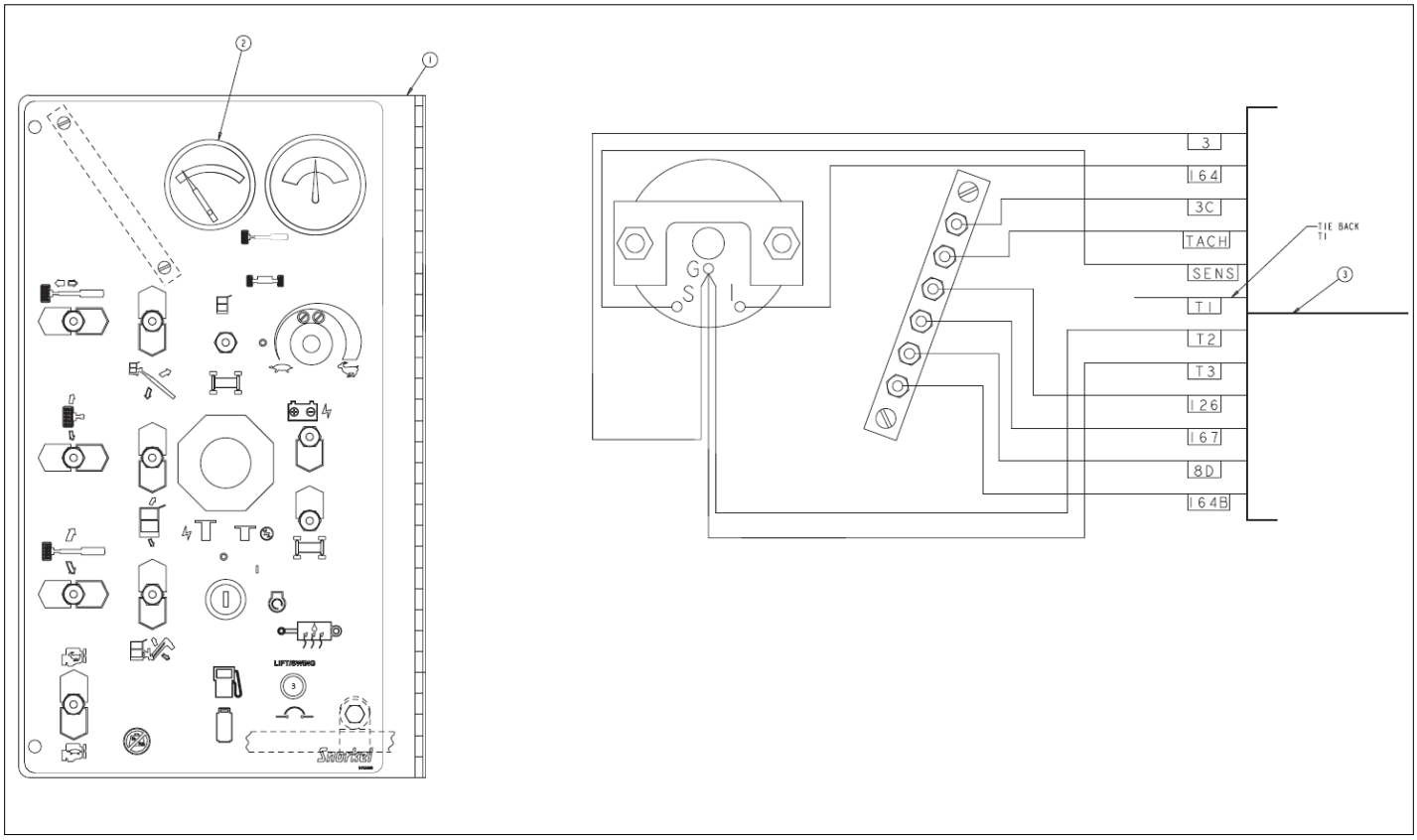

Courtesy of Crane.Market

Item	Part No.	Name	Qty	Uom
26	3070003	AMMETER	1	EA
27	5093006	CLAMP	1	EA
28	3020020	SWITCH EMERGENCY STOP PUSH/PULL	1	EA
29	970029	CAPSCREW 1/4-20 X 3/4 INCH LONG HEX HEAD GRADE 5	1	EA
30	5560004	NUT HEXHD .250-20 LKG	1	EA
31	986019	WASHER FLAT .250	1	EA
32	5560673	MACHINE SCREW #10-24NC X 1" LG	2	EA
33	5560034	NUT HEX LKG 10-24	2	EA
34	0071583	WIRE 12 R8I R8I 5	2	EA
35	987089	#10 LOCK WASHER	1	EA
36	984049	NUT, #10-24 HEX	1	EA
37	0071565	WIRE 12 R10I R6I 8	1	EA

Courtesy of Crane.Market

ELECTRICAL

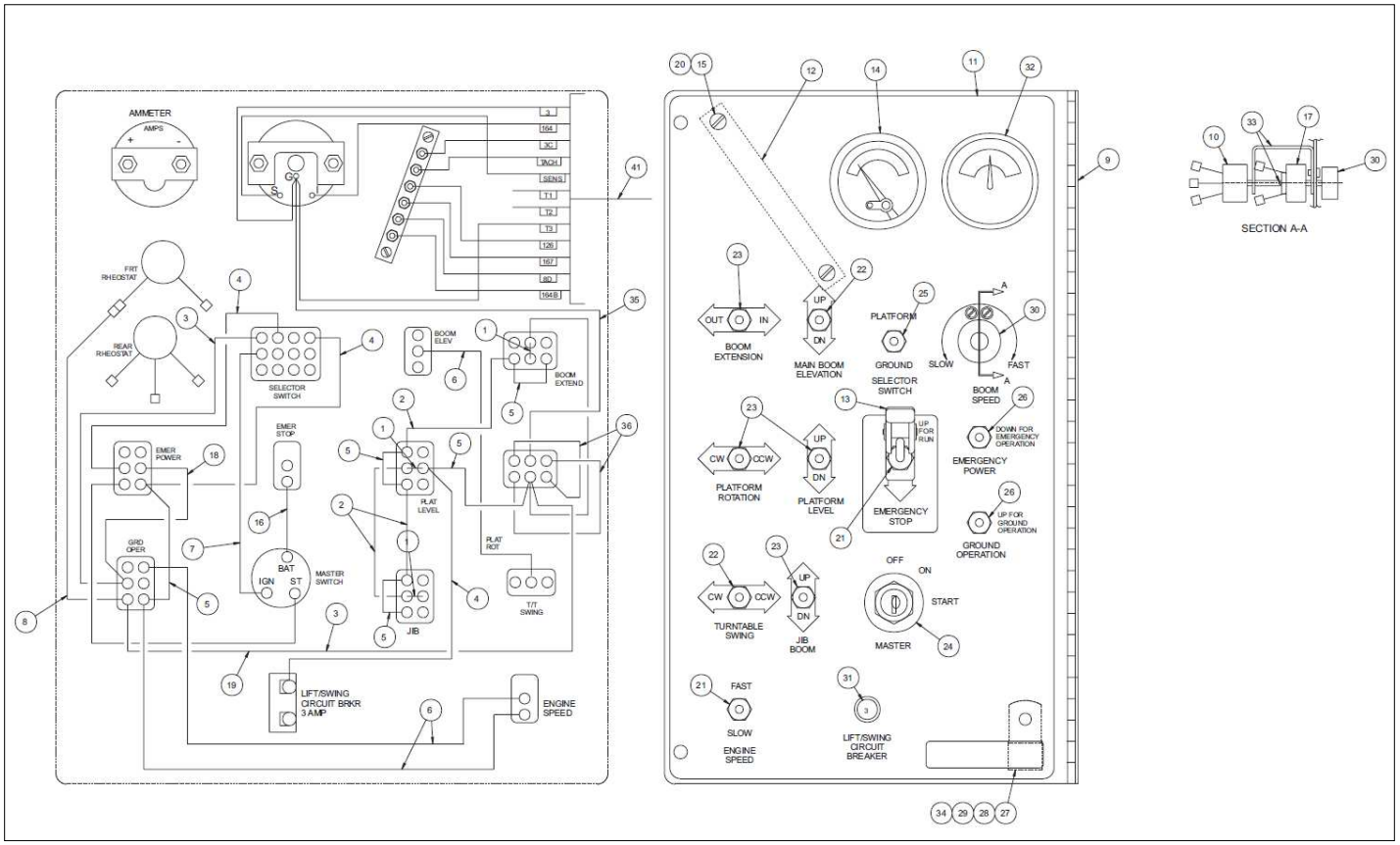

Courtesy of Crane.Market

Item	Part No.	Name	Qty	Uom
1	0060373	JUMPER, SWITCH TERMINAL STRAP	3	EA
2	0070730	WIRE 16 R61 R61 5.5	3	EA
3	0070742	WIRE 12 R61 R61 8-REV K	2	EA
4	0070746	WIRE 16 R61 R61 9	4	EA
5	0070747	WIRE 16 R61 R61 3	5	EA
6	0070753	WIRE 16 R61 R61 12	3	EA
7	0071541	WIRE 12 R61 R101 14	1	EA
8	0090757	WIRE 16 R61 FEM250FI 3	1	EA
9	0074585	LOWER CONTROL PANEL AND HINGE	1	EA
10	0082002	RHEOSTAT SUB ASSEMBLY	1	EA
Not Shown	3040619	REPLACEMENT SWITCH	1	EA
Not Shown	0150647	REPLACEMENT JUMPER WIRE	1	EA
11	0081845	PLACARD, LOWER CONTROLS	1	EA
12	300489	TERMINAL STRIP #10 STUD 6 CIR	1	EA
13	562236	GUARD, EMERGENCY STOP SWITCH	1	EA
14	3070041	TEMPERATURE GAUGE	1	EA
15	5560034	NUT HEX LKG 10-24	2	EA
16	0070735	WIRE 12 R 61 R101 24	1	EA
17	0180949	RHEOSTAT	1	EA
Not Shown	3040497	REPLACEMENT SWITCH	1	EA
18	0181104	WIRE 12 R6 R6 6	1	EA
19	0240483	WIRE 16 R61 R101 8	1	EA
20	5560649	M.SCREW, #10-24 X 1" LG. TRUSS HEAD	2	EA
21	3020013	SWITCH TOGGLE SPST ON OFF SEALED	2	EA

Courtesy of Crane.Market

Item	Part No.	Name	Qty	Uom
22	3020016	SWITCH TOGGLE SPDT (ON) OFF (ON)	2	EA
23	3020018	SWITCH TOGGLE DPDT (ON) OFF (ON)	4	EA
24	3020087	KEY SWITCH SINGLE CODE	1	EA
Not Shown	8030044	SPARE KEY FOR #3020087	1	EA
25	3020048	SWITCH TOGGLE 4PDT (ON/ON) SELAED	1	EA
26	3020081	SWITCH TOGGLE DPDT (M/NONE/ON) SEALED	2	EA
27	986019	WASHER FLAT .250	1	EA
28	5560004	NUT HEXHD .250-20 LKG	1	EA
29	970029	CAPSCREW 1/4-20 X 3/4 INCH LONG HEX HEAD GRADE 5	1	EA
30	3040348	KNOB RHEOSTAT	1	EA
31	3040535	CIRCUIT BREAKER 3AMP	1	EA
32	3070003	AMMETER	1	EA
33	3040620	COUPLER KIT	1	EA
34	5093006	CLAMP	1	EA
35	0071589	JUMPER WIRE	1	EA
36	0071583	WIRE 12 R8I R8I 5	2	EA

Courtesy of Crane.Market

ELECTRICAL

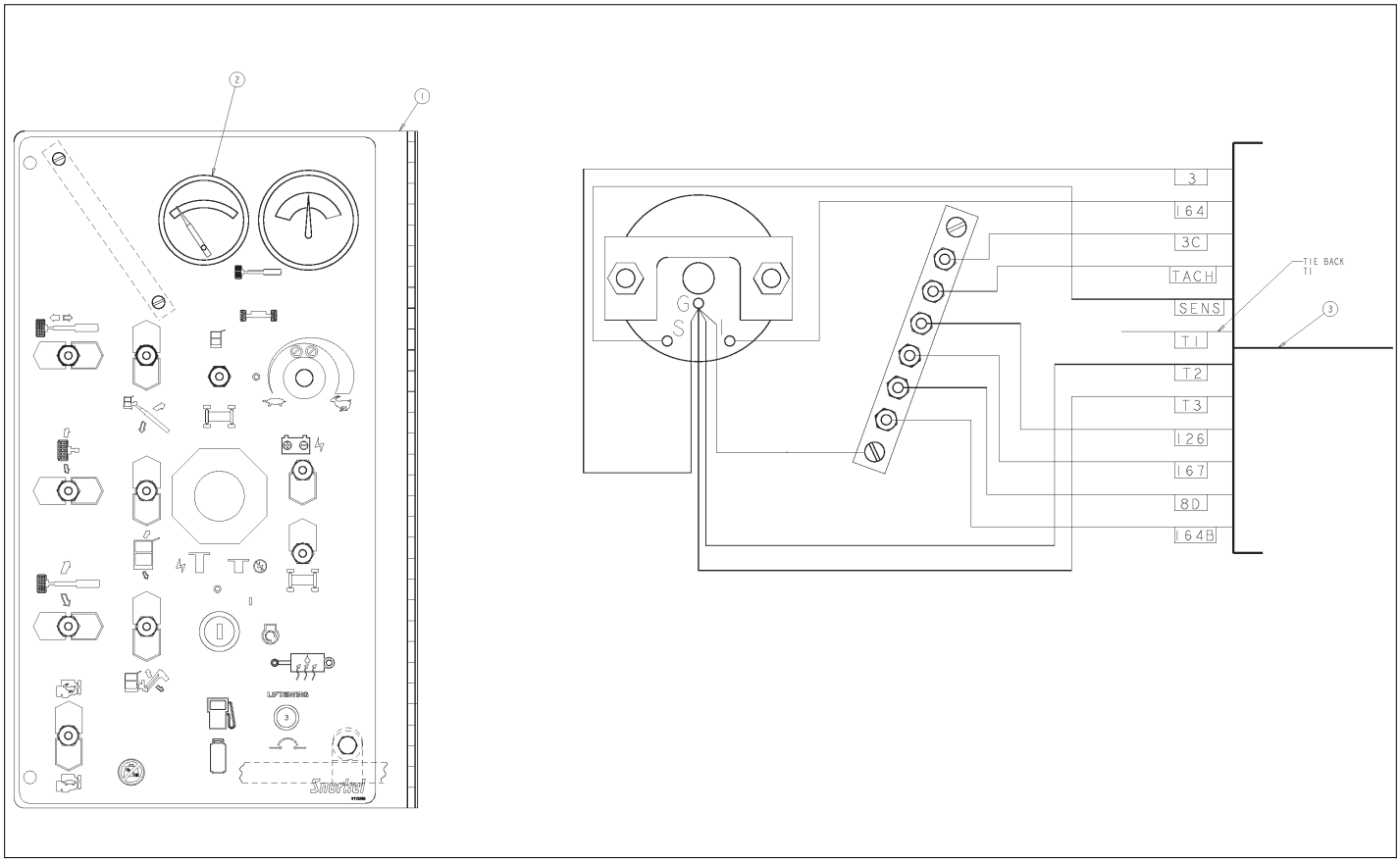

Courtesy of Crane.Market

Item	Part No.	Name	Qty	Uom
1	0084157	GRD (LOWER) CONT PNL ASSY	1	EA
2	3070041	TEMPERATURE GAUGE	1	EA
3	0083300	EPS WIRE ASSEMBLY	1	EA

Courtesy of Crane.Market

ELECTRICAL

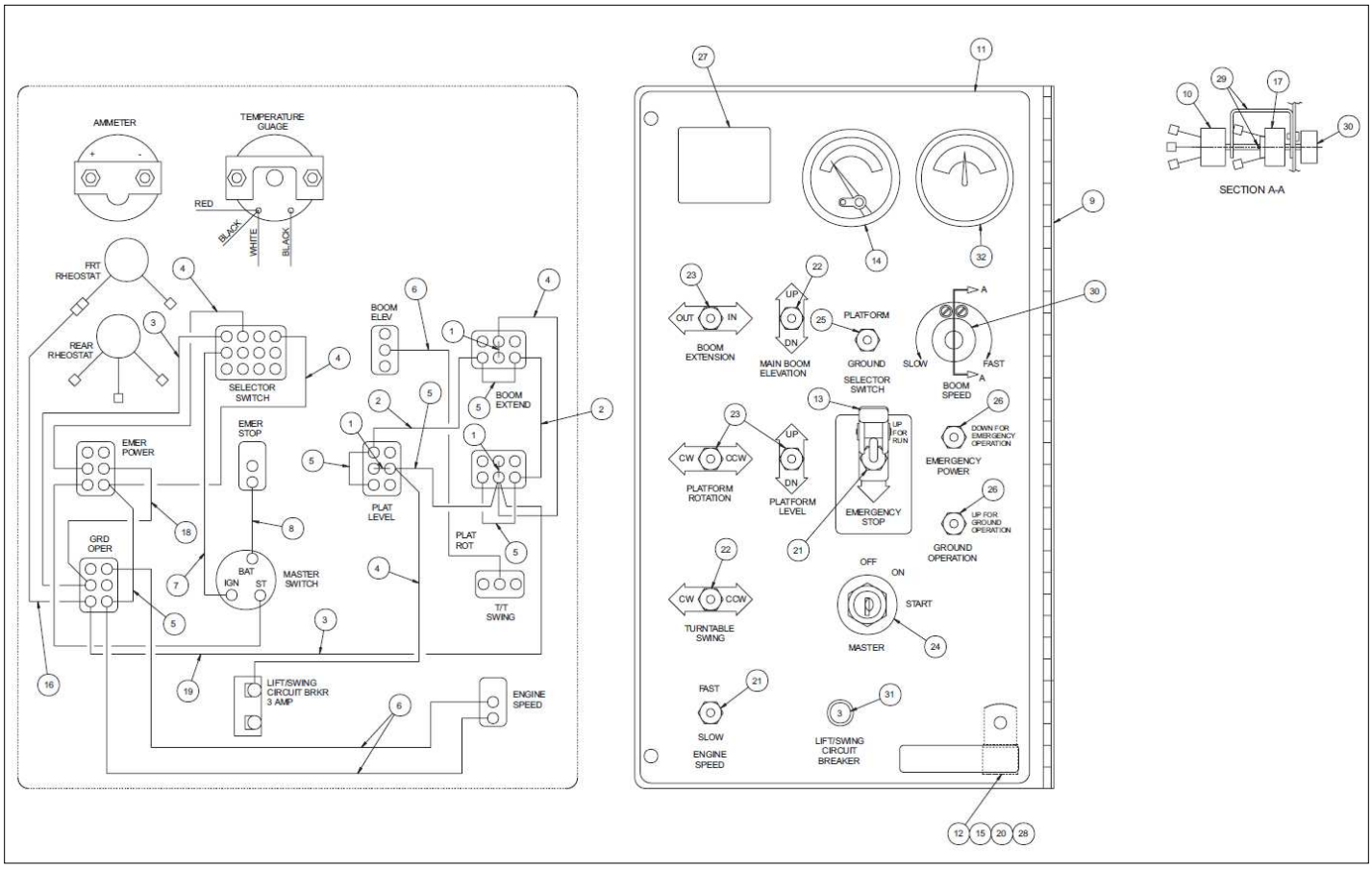

Courtesy of Crane.Market

Item	Part No.	Name	Qty	Uom
1	0060373	JUMPER, SWITCH TERMINAL STRAP	3	EA
2	0070730	WIRE 16 R61 R61 5.5	2	EA
3	0070742	WIRE 12 R61 R61 8-REV K	2	EA
4	0070746	WIRE 16 R61 R61 9	4	EA
5	0070747	WIRE 16 R61 R61 3	5	EA
6	0070753	WIRE 16 R61 R61 12	3	EA
7	0071541	WIRE 12 R61 R101 14	1	EA
8	0070735	WIRE 12 R 61 R101 24	1	EA
9	0081819	LOWER CONTROL PANEL AND HINGE	1	EA
10	0082002	RHEOSTAT SUB ASSEMBLY	1	EA
Not Shown	3040619	REPLACEMENT SWITCH	1	EA
Not Shown	0150647	REPLACEMENT JUMPER WIRE	1	EA
11	0082003	PLACARD, LOWER CONTROLS	1	EA
12	986019	WASHER FLAT .250	1	EA
13	562236	GUARD, EMERGENCY STOP SWITCH	1	EA
14	3070021	TEMPERATURE GAUGE	1	EA
15	5560004	NUT HEXHD .250-20 LKG	1	EA
16	0090757	WIRE 16 R61 FEM250FI 3	1	EA
17	0180949	RHEOSTAT	1	EA
Not Shown	3040497	REPLACEMENT SWITCH	1	EA
18	0181104	WIRE 12 R6 R6 6	1	EA
19	0240483	WIRE 16 R61 R101 8	1	EA
20	970029	CAPSCREW 1/4-20 X 3/4 INCH LONG HEX HEAD GRADE 5	1	EA
21	3020013	SWITCH TOGGLE SPST ON OFF SEALED	2	EA

Courtesy of Crane.Market

Item	Part No.	Name	Qty	Uom
22	3020016	SWITCH TOGGLE SPDT (ON) OFF (ON)	2	EA
23	3020018	SWITCH TOGGLE DPDT (ON) OFF (ON)	3	EA
24	3020087	KEY SWITCH SINGLE CODE	1	EA
Not Shown	8030044	SPARE KEY FOR #3020087	1	EA
25	3020048	SWITCH TOGGLE 4PDT (ON/ON) SELAED	1	EA
26	3020081	SWITCH TOGGLE DPDT (M/NONE/ON) SEALED	2	EA
27	0082727	PLACARD, BLANK	1	EA
28	5093006	CLAMP	1	EA
29	3040620	COUPLER KIT	1	EA
30	3040348	KNOB RHEOSTAT	1	EA
31	3040535	CIRCUIT BREAKER 3AMP	1	EA
32	3070003	AMMETER	1	EA

Courtesy of Crane.Market

ELECTRICAL

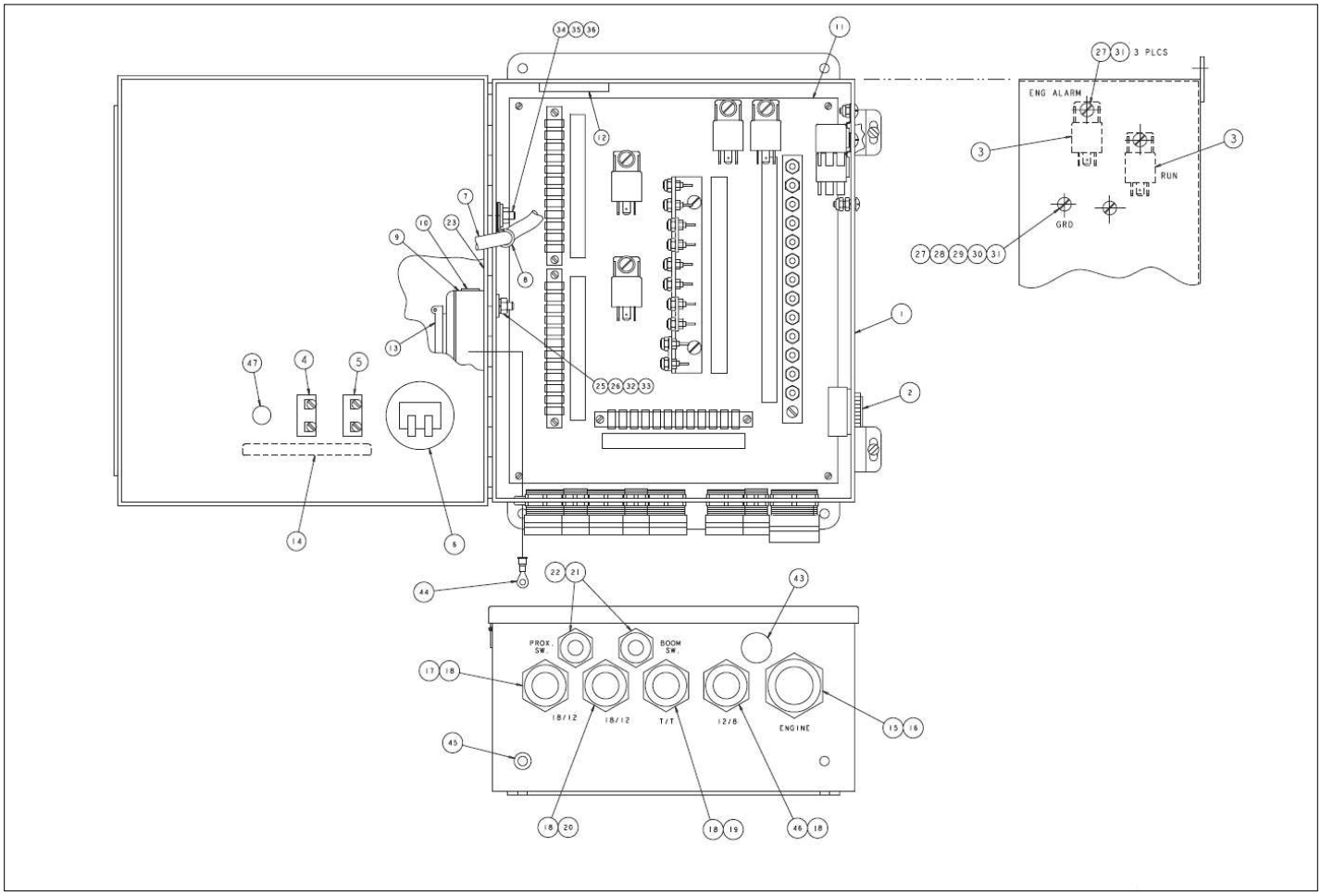

Courtesy of Crane.Market

Item	Part No.	Name	Qty	Uom
1	0081996	WIRING BOX - DRILLED	1	EA
2	3040411	ALARM MINI SIREN 6-28VDC-	1	EA
3	3040469	RELAY SPDT 12V 30AMP SONG	2	EA
4	582206	CIRCUIT BREAKER 5 AMP	1	EA
5	3040069	CIRCUIT BREAKER	1	EA
6	3070001	HOURMETER	1	EA
7	0081997	INTERNAL WIRE ASSY	1	EA
8	5093001	CUSHION CLAMP #8 (1/2)	1	EA
9	3040118	EXTENSION W/GASKET	1	EA
10	3040121	CLOSE-UP PLUG	4	EA
11	0084114	PANEL SUB ASSY GM T3	1	EA
12	0070967	CORROSION INHIBITOR STICK-BACK	1	EA
13	3045278	OUTLET	1	EA
14	0111735	PLACARD, CIRCUIT BREAKER	1	EA
15	3040386	CONNECTOR	1	EA
16	3040387	NUT LKG HUB 1.00 SAMEAS 962139	1	EA
17	3040116	CONN .75 .500-.625	1	EA
18	3040110	NUT LKG HUB .750 SAMEAS 962129	4	EA
19	3040298	CONNECTOR	1	EA
20	3040285	CONN .75 .375-.500	1	EA
21	3040187	CONNECTOR	2	EA
22	3040070	LOCKNUT .50	2	EA
23	0150606	DECAL 125V 15AMP PWR TO PLATF	1	EA
24	PNNA	POP RIVET AD32ABS	2	EA
25	PNNA	MACH. SCREW, #6-32	2	EA
26	PNNA	NUT, #6-32 HEX PLTD	2	EA
27	PNNA	#10-24 X 3/4" LG. TRUSS HD	4	EA

Courtesy of Crane.Market

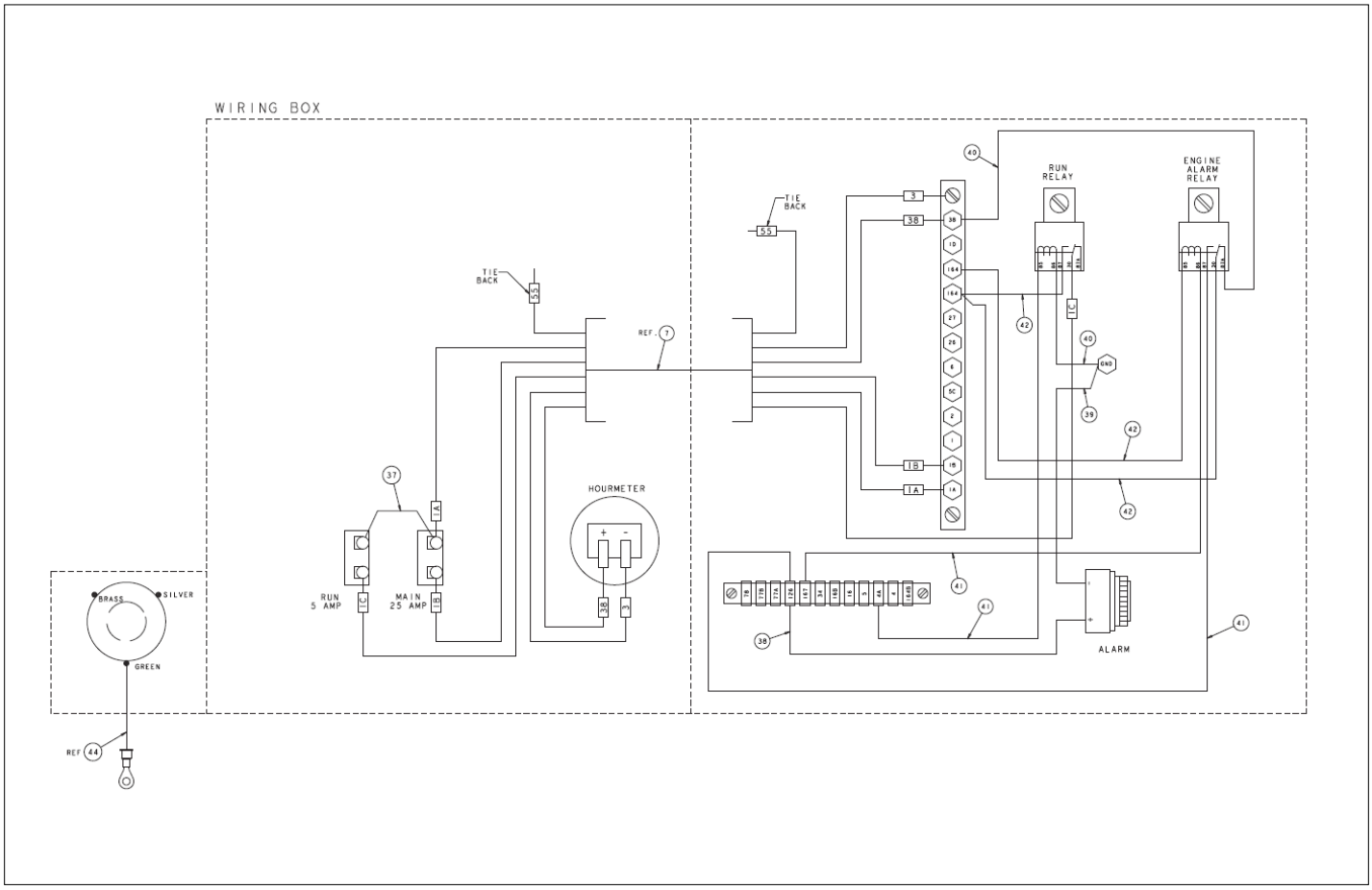

Courtesy of Crane.Market

Item	Part No.	Name	Qty	Uom
28	PNNA	#10 STAR WASHER	1	EA
29	PNNA	#10 LOCK WASHER	1	EA
30	PNNA	#10-24 HEX NUT	1	EA
31	PNNA	#10 ESNA	4	EA
32	PNNA	FLAT WASHER #6	2	EA
33	PNNA	WASHER , #6 LOCK	2	EA
34	PNNA	FLAT WASHER 1/4"	1	EA
35	PNNA	BLT HEXHD .25-20 X .75	1	EA
36	PNNA	NUT, 1/4-20 ESNA	1	EA
37	0070735	WIRE 12 R 61 R101 24	1	EA
38	0181028	WIRE 16 R6 FEM188 10.5	1	EA
39	0240483	WIRE 16 R61 R101 8	1	EA
40	0081559	JUMPER WIRE	2	EA
41	0071528	JUMPER WIRE	3	EA
42	0073057	JUMPER WIRE	3	EA
43	3040301	PLUG HOLE .750	1	EA
44	0071561	JUMPER WIRE	1	EA
45	5569003	GROMMET .188 ID .438OD .125-AN9	1	EA
46	3040295	CONN .75 .625-.75	1	EA
47	469396	HOLE PLUG .50 DIA	1	EA

Courtesy of Crane.Market

ELECTRICAL

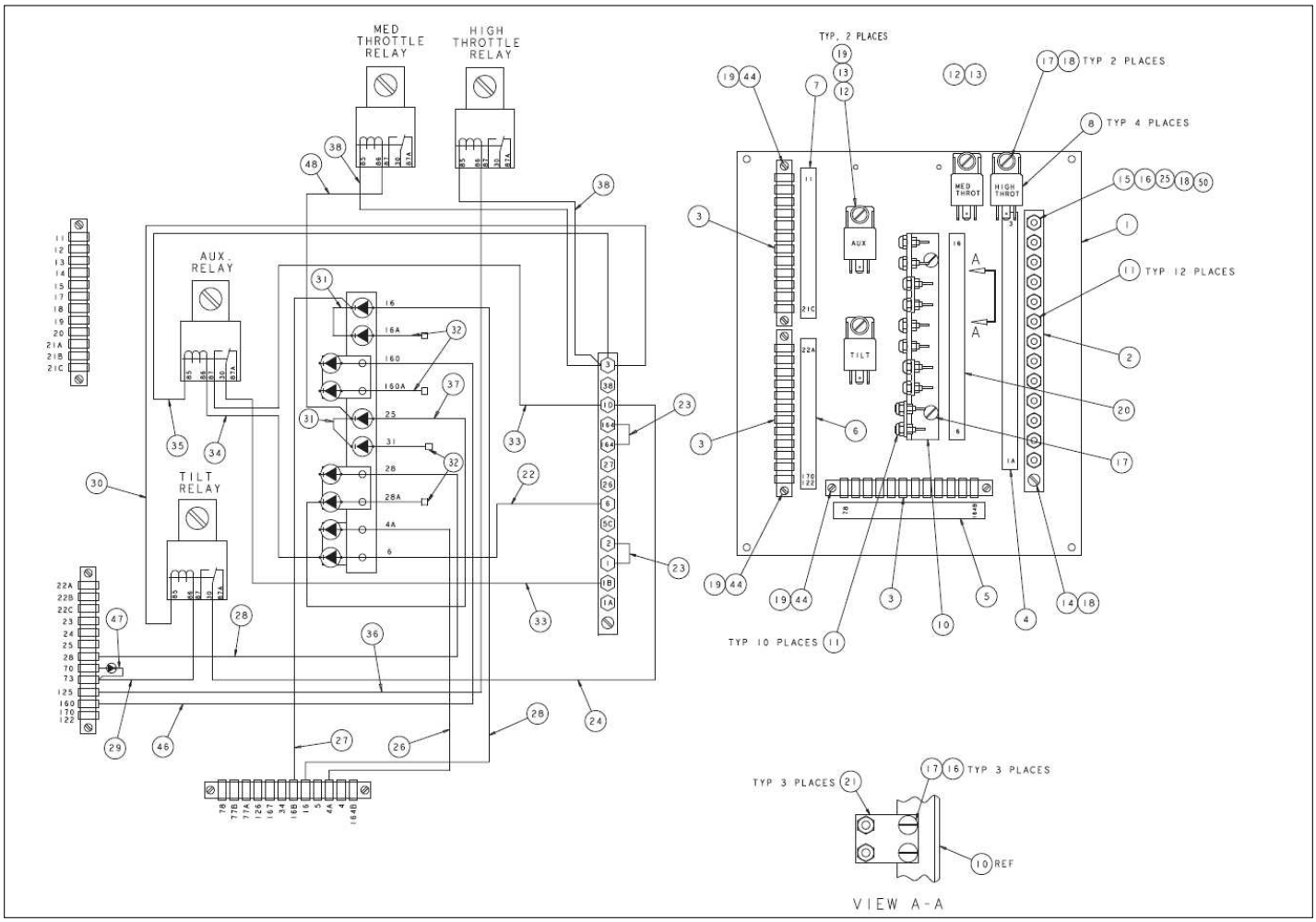

Courtesy of Crane.Market

Item	Part No.	Name	Qty	Uom
1	0180796	PANEL-DRILLED	1	EA
2	3044712	TERM STRIP (12) #10 STUD	1	EA
3	3040433	TERMINAL STRIP (12) .188 TAB	3	EA
4	0084116	DECAL, POWER	1	EA
5	0181553	DECAL TERM STRIP VERT 12	1	EA
6	0181107	DECAL TERM STRIP VERT 12TERM	1	EA
7	0181106	DECAL TERM STRIP VERT 12TERM	1	EA
8	3040469	RELAY SPDT 12V 30AMP SONG	4	EA
10	0150488	DIODE HOLDER -10PLC	1	EA
11	5569997	NUT HEX 6-32	22	EA
12	974239	SCREW RHD #6-32 .50	2	EA
13	986159	WSHR FLAT 6	2	EA
14	974689	SCR RDH MACH 10-24 .75	1	EA
15	974729	SCREW RHD MACH 10-24 1.25	1	EA
16	5560034	NUT HEX LKG 10-24	7	EA
17	5560609	SCR TRHD 10-24 .50	10	EA
18	987089	#10 LOCK WASHER	4	EA
19	987349	WSHR LOCK 6	10	EA
20	0181554	DECAL TERM STRIP VERT 10	1	EA
21	0073631	DIODE STAND-OFF 2-DIODE	3	EA
22	0070681	WIRE 16 R10 DIODE 7	1	EA
23	0070711	WIRE 12 R10I R10I 3	2	EA
24	0071812	WIRE 16 R10 FEM250FI 18	1	EA
25	5560654	WASHER LOCK #10	1	EA
26	0070682	WIRE 16 FEM188I DIODE 7	1	EA
27	0090621	WIRE 16 R10I FEM188I 13	1	EA
28	0140317	WIRE 16 FEM188I DIO 9	2	EA
29	0151205	WIRE 16 FEM188 FEM250FI 7	1	EA

Courtesy of Crane.Market

Item	Part No.	Name	Qty	Uom
30	0081560	WIRE 16 R10I FEM250FI 12	1	EA
31	0070724	WIRE 18 R10I R10I 3	2	EA
32	0181110	WIRE 16 FEM250FI DIO 2.25	4	EA
33	0181031	WIRE 12 R10 FEM250FI 11	2	EA
34	0081559	JUMPER WIRE	1	EA
35	0081515	WIRE 16 R10 FEM250FI 8	1	EA
36	0181030	WIRE 16 FEM188 FEM250FI 15	1	EA
37	0110918	WIRE 16 R101 DIODE 10	1	EA
38	0181111	WIRE 16 R10I FEM250FI 5	2	EA
40	0070713	WIRE 18 R10I FEM188I 10	1	EA
44	PNNA	SCR RHD #6-32 .75	6	EA
46	0110471	WIRE 16 FEM188I DIODE 11	1	EA
47	0170335	WIRE 18 FEM188I FEM188I 5 DIO	1	EA
48	0181113	WIRE 16 R10I FEM250FI 9-25/25	1	EA
50	984049	NUT, #10-24 HEX	1	EA

Courtesy of Crane.Market

ELECTRICAL

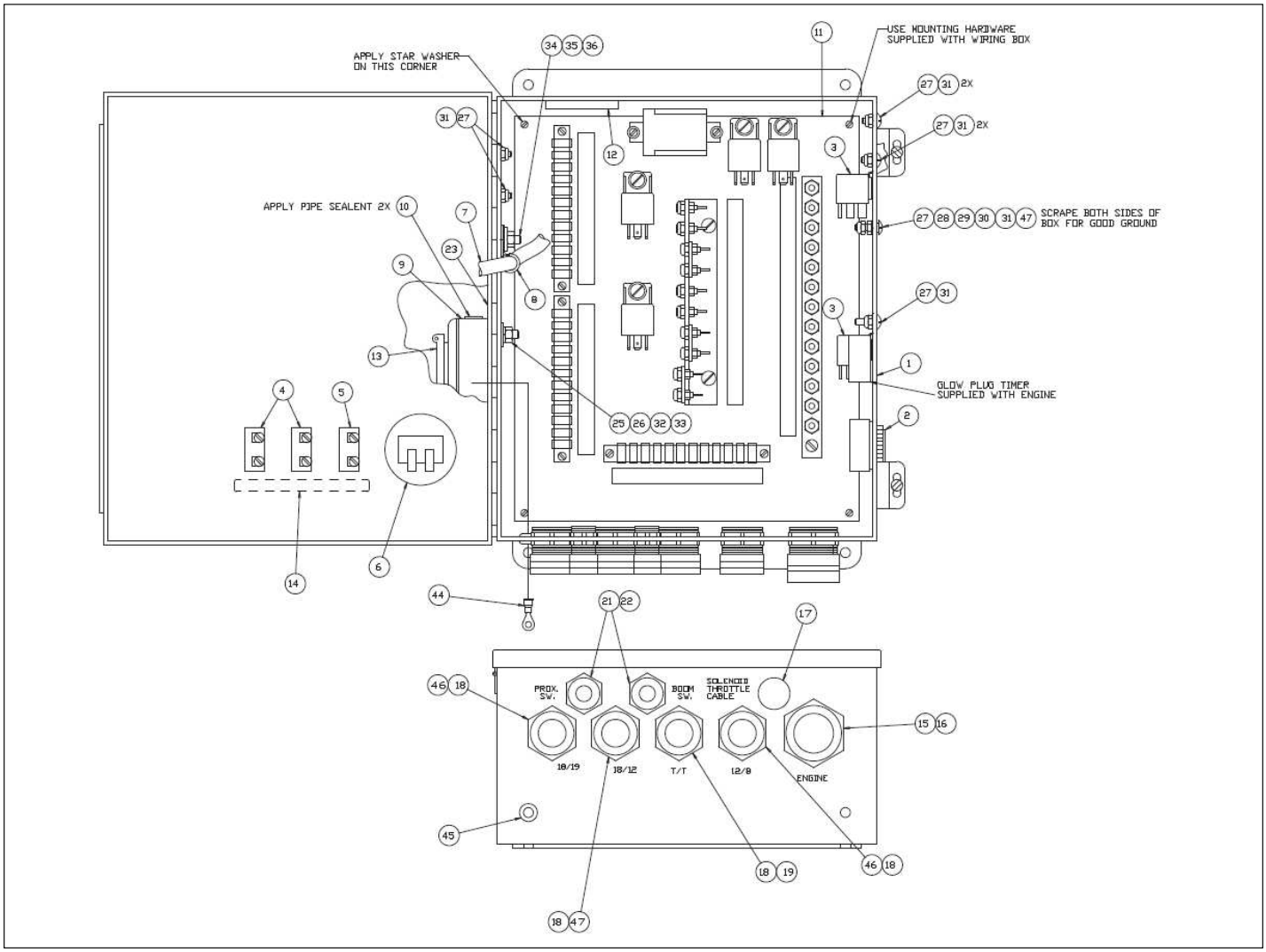

Courtesy of Crane.Market

Item	Part No.	Name	Qty	Uom
1	0081996	WIRING BOX - DRILLED	1	EA
2	3040411	ALARM MINI SIREN 6-28VDC-	1	EA
3	3040469	RELAY SPDT 12V 30AMP SONG	3	EA
4	3040252	CIRCUIT BREAKER	2	EA
5	3040069	CIRCUIT BREAKER	1	EA
6	3070001	HOURMETER	1	EA
7	0081997	INTERNAL WIRE ASSY	1	EA
8	5093001	CUSHION CLAMP #8 (1/2)	1	EA
9	3040118	EXTENSION W/GASKET	1	EA
10	3040121	CLOSE-UP PLUG	2	EA
11	0084703	PANEL SUB ASSY KU	1	EA
12	0070967	CORROSION INHIBITOR STICK-BACK	1	EA
13	3045278	OUTLET	1	EA
14	0111735	PLACARD, CIRCUIT BREAKER	1	EA
15	3040386	CONNECTOR	1	EA
16	3040387	NUT LKG HUB 1.00 SAMEAS 962139	1	EA
17	3040031	PLUG HOLE .750	1	EA
18	3040110	NUT LKG HUB .750 SAMEAS 962129	4	EA
19	3040298	CONNECTOR	1	EA
21	3040187	CONNECTOR	2	EA
22	3040070	LOCKNUT .50	2	EA
23	0150606	DECAL 125V 15AMP PWR TO PLATF	1	EA
24	PNNA	POP RIVET AD32ABS	2	EA
25	974279	SCR RDH 6-32 .750	2	EA
26	984009	NUT #6-32 HEX	2	EA
27	5563025	TERMINAL STRIP #10 STUD 6 CIR	8	EA

Courtesy of Crane.Market

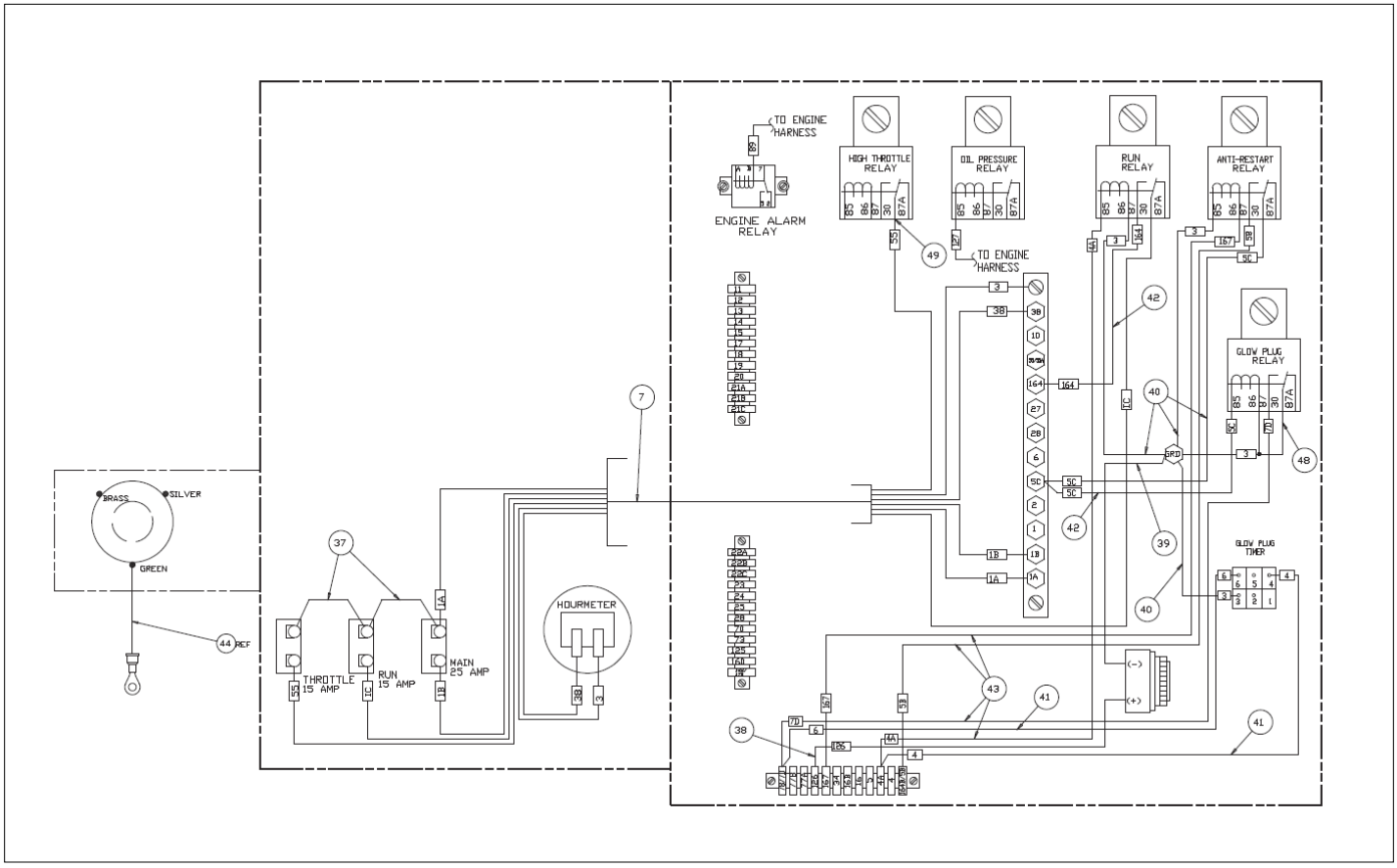

Courtesy of Crane.Market

Item	Part No.	Name	Qty	Uom
28	5560703	WSHR STAR 10 EXTERNAL TOOTH	1	EA
29	5560654	WASHER LOCK #10	1	EA
30	984049	NUT, #10-24 HEX	1	EA
31	5560034	NUT HEX LKG 10-24	8	EA
32	986159	WSHR FLAT 6	2	EA
33	987349	WSHR LOCK 6	2	EA
34	986019	WASHER FLAT .250	1	EA
35	970029	CAPSCREW 1/4-20 X 3/4 INCH LONG HEX HEAD GRADE 5	1	EA
36	5560004	NUT HEXHD .250-20 LKG	1	EA
37	0070735	WIRE 12 R 61 R101 24	2	EA
38	0181028	WIRE 16 R6 FEM188 10.5	1	EA
39	0240483	WIRE 16 R61 R101 8	1	EA
40	0081559	JUMPER WIRE	4	EA
41	0071528	JUMPER WIRE	2	EA
42	0073057	JUMPER WIRE	2	EA
43	0111508	WIRE 16 FEM188 FEM250 24	4	EA
44	0071561	JUMPER WIRE	1	EA
45	5569003	GROMMET .188 ID .438OD .125-AN9	1	EA
46	3040295	CONN .75 .625-.75	2	EA
47	3040285	CONN .75 .375-.500	1	EA
48	0152586	JUMPER WIRE ASSEMBLY	1	EA
49	3040065	TERM FEM250FI 12/10 FULLY INSULATED	1	EA

Courtesy of Crane.Market

ELECTRICAL

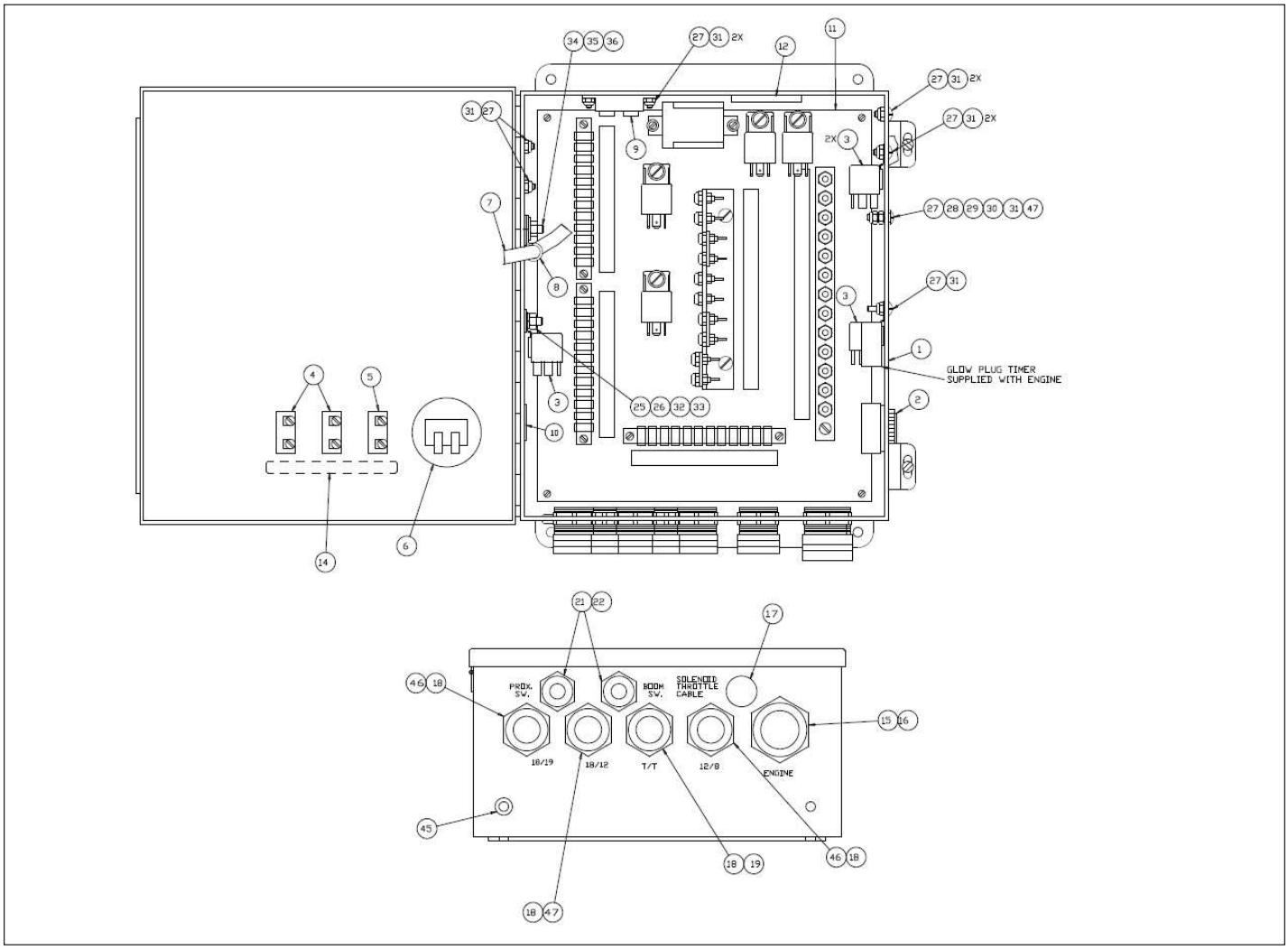

Courtesy of Crane.Market

Item	Part No.	Name	Qty	Uom
1	0081996	WIRING BOX - DRILLED	1	EA
2	3040411	ALARM MINI SIREN 6-28VDC-	1	EA
3	3040469	RELAY SPDT 12V 30AMP SONG	4	EA
4	3040252	CIRCUIT BREAKER	2	EA
5	3040069	CIRCUIT BREAKER	1	EA
6	3070001	HOURMETER	1	EA
7	0081997	INTERNAL WIRE ASSY	1	EA
8	5093001	CUSHION CLAMP #8 (1/2)	1	EA
9	3220096	OVERLOAD FAULT DETECTION	1	EA
10	583406	PLUG HOLE 2.00 DIA PLASTIC	1	EA
11	0084703	PANEL SUB ASSY KU	1	EA
12	0070967	CORROSION INHIBITOR STICK-BACK	1	EA
13	3040047	TERM FEM250FI 22/18	1	EA
14	0111735	PLACARD, CIRCUIT BREAKER	1	EA
15	3040386	CONNECTOR	1	EA
16	3040387	NUT LKG HUB 1.00 SAMEAS 962139	1	EA
17	3040031	PLUG HOLE .750	1	EA
18	3040110	NUT LKG HUB .750 SAMEAS 962129	4	EA
19	3040298	CONNECTOR	1	EA
20	3044146	TERM R10I 22/18	1	EA
21	3040187	CONNECTOR	2	EA
22	3040070	LOCKNUT .50	2	EA
23	3040082	TERM MALE250FI 16/14	1	EA
24	5560655	RVT POP .094 DIA .125 DMD STL	2	EA
25	974279	SCR RDH 6-32 .750	2	EA
26	984049	NUT, #10-24 HEX	1	EA
27	5563025	TERMINAL STRIP #10 STUD 6 CIR	10	EA

Courtesy of Crane.Market

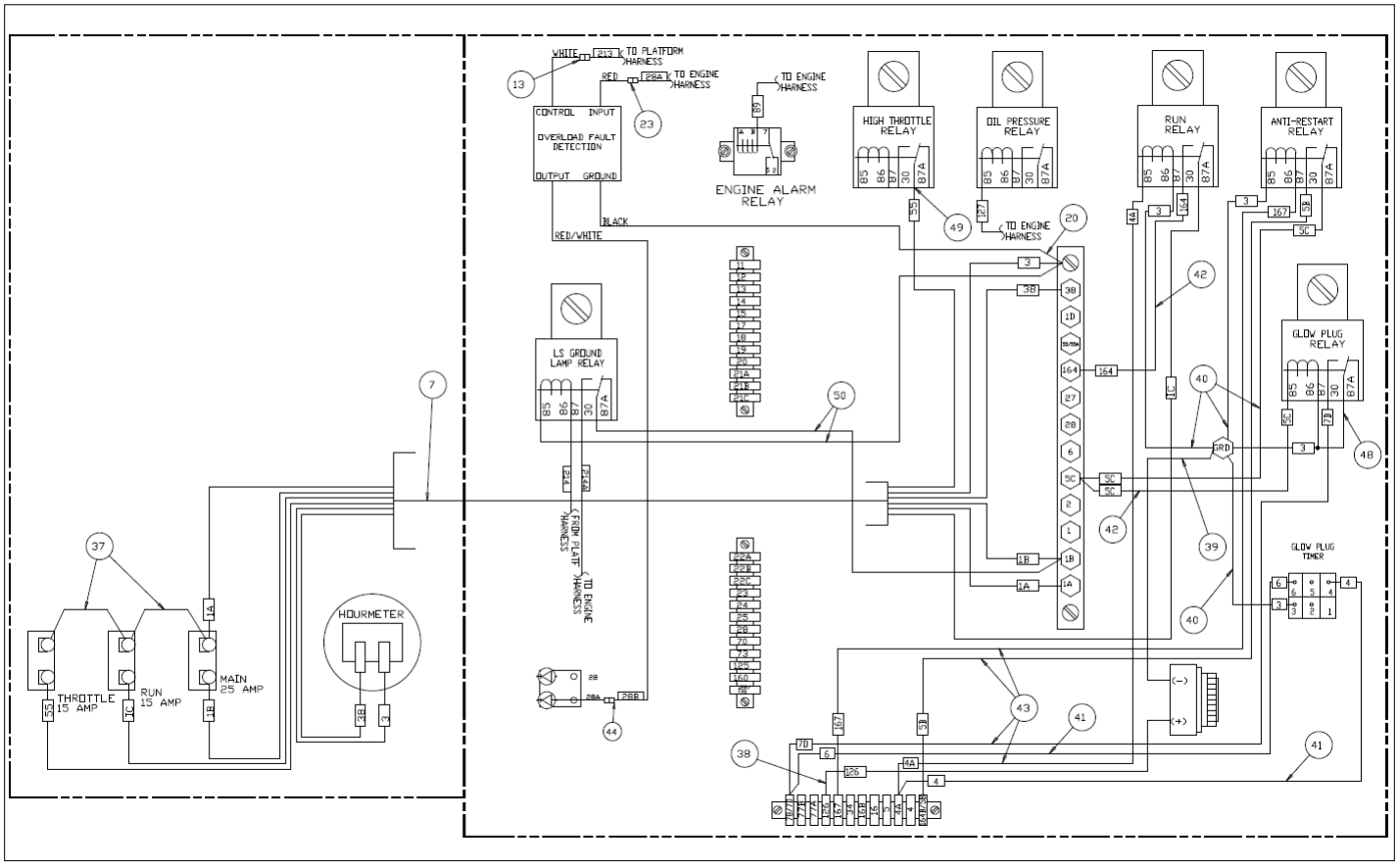

Courtesy of Crane.Market

Item	Part No.	Name	Qty	Uom
28	5560703	WSHR STAR 10 EXTERNAL TOOTH	1	EA
29	5560654	WASHER LOCK #10	1	EA
30	984009	NUT #6-32 HEX	2	EA
31	5560034	NUT HEX LKG 10-24	10	EA
32	986159	WSHR FLAT 6	2	EA
33	987349	WSHR LOCK 6	2	EA
34	986019	WASHER FLAT .250	1	EA
35	970029	CAPSCREW 1/4-20 X 3/4 INCH LONG HEX HEAD GRADE 5	1	EA
36	5560004	NUT HEXHD .250-20 LKG	1	EA
37	0070735	WIRE 12 R 61 R101 24	2	EA
38	0181028	WIRE 16 R6 FEM188 10.5	1	EA
39	0240483	WIRE 16 R61 R101 8	1	EA
40	0081559	JUMPER WIRE	4	EA
41	0071528	JUMPER WIRE	2	EA
42	0073057	JUMPER WIRE	2	EA
43	0111508	WIRE 16 FEM188 FEM250 24	4	EA
44	3040083	TERM FEM250FI 16/14	1	EA
45	5569003	GROMMET .188 ID .438OD .125-AN9	1	EA
46	3040295	CONN .75 .625-.75	2	EA
47	3040285	CONN .75 .375-.500	1	EA
48	0152586	JUMPER WIRE ASSEMBLY	1	EA
49	3040065	TERM FEM250FI 12/10 FULLY INSULATED	1	EA
50	0071812	WIRE 16 R10 FEM250FI 18	2	EA

Courtesy of Crane.Market

ELECTRICAL

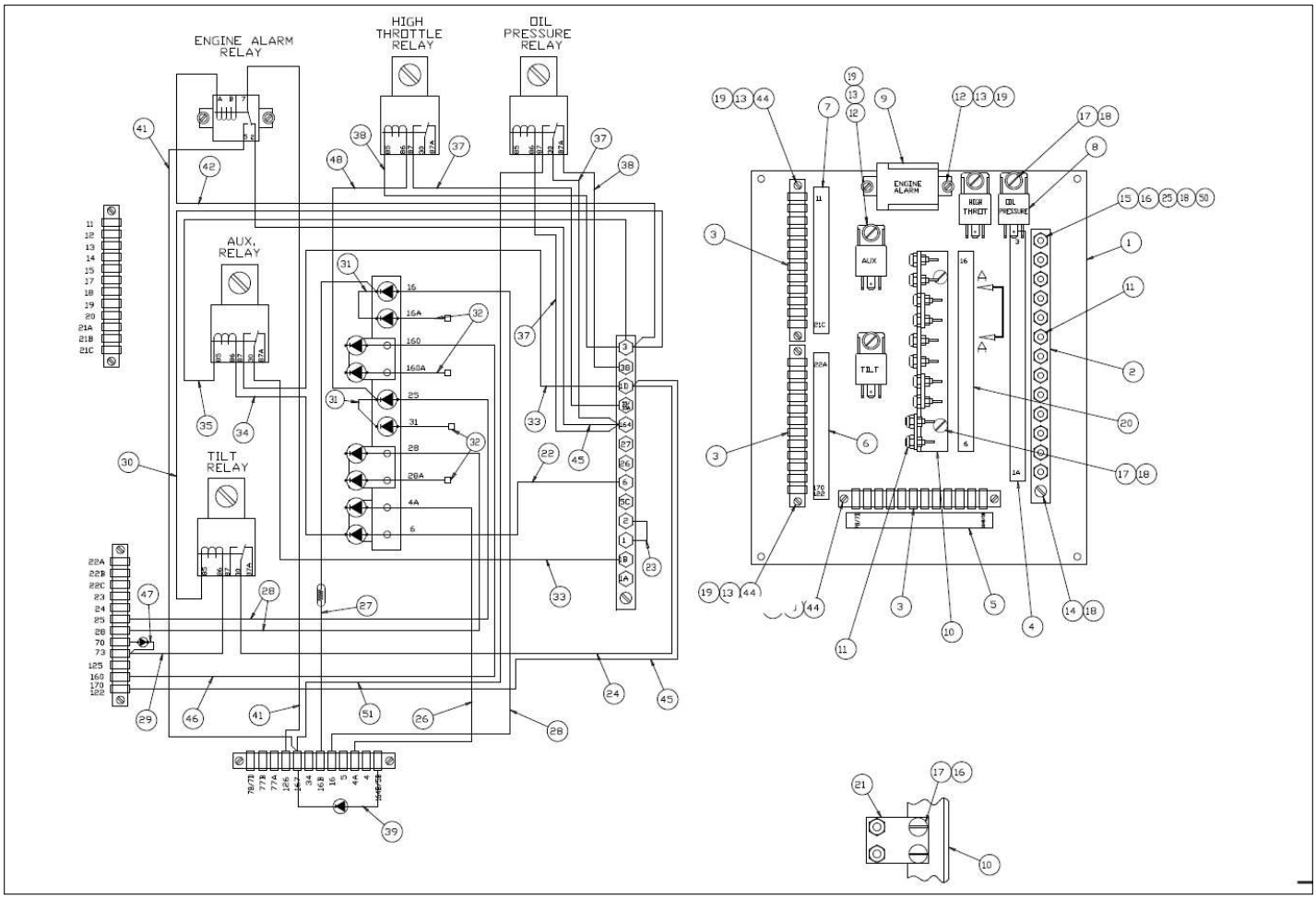

Courtesy of Crane.Market

Item	Part No.	Name	Qty	Uom
1	0180796	PANEL-DRILLED	1	EA
2	3044712	TERM STRIP (12) #10 STUD	1	EA
3	3040433	TERMINAL STRIP (12) .188 TAB	3	EA
4	0181552	DECAL TERM STRIP VERT 13	1	EA
5	0181553	DECAL TERM STRIP VERT 12	1	EA
6	0181107	DECAL TERM STRIP VERT 12TERM	1	EA
7	0181106	DECAL TERM STRIP VERT 12TERM	1	EA
8	3040469	RELAY SPDT 12V 30AMP SONG	4	EA
9	3040188	RELAY SPDT 12V 30AMP SONG	1	EA
10	0150488	DIODE HOLDER -10PLC	1	EA
11	5560038	NUT #10-32 ESNA	22	EA
12	5560666	MACHINE SCREW #6-32 X 1/2 INCH LONG TRUSS HEAD	4	EA
13	986159	WSHR FLAT 6	6	EA
14	974689	SCR RDH MACH 10-24 .75	1	EA
15	974729	SCREW RHD MACH 10-24 1.25	1	EA
16	5560034	NUT HEX LKG 10-24	7	EA
17	5560609	SCR TRHD 10-24 .50	10	EA
18	5560654	WASHER LOCK #10	5	EA
19	987349	WSHR LOCK 6	10	EA
20	0181554	DECAL TERM STRIP VERT 10	1	EA
21	0073631	DIODE STAND-OFF 2-DIODE	3	EA
22	0070681	WIRE 16 R10 DIODE 7	1	EA
23	0070711	WIRE 12 R10I R10I 3	1	EA
24	0071812	WIRE 16 R10 FEM250FI 18	1	EA
25	5560703	WSHR STAR 10 EXTERNAL TOOTH	1	EA
26	0070682	WIRE 16 FEM188I DIODE 7	1	EA
27	0083778	RESISTOR WIRE (3 OHM)	1	EA

Courtesy of Crane.Market

Item	Part No.	Name	Qty	Uom
28	0140317	WIRE 16 FEM188I DIO 9	3	EA
29	0151205	WIRE 16 FEM188 FEM250FI 7	1	EA
30	0081560	WIRE 16 R10I FEM250FI 12	1	EA
31	0070724	WIRE 18 R10I R10I 3	2	EA
32	0181110	WIRE 16 FEM250FI DIO 2.25	4	EA
33	0181031	WIRE 12 R10 FEM250FI 11	2	EA
34	0081559	JUMPER WIRE	1	EA
35	0081515	WIRE 16 R10 FEM250FI 8	1	EA
37	0181136	WIRE 12 R10 FEM250FI 5	3	EA
38	0181111	WIRE 16 R10I FEM250FI 5	2	EA
39	0112164	DIODE WIRE	1	EA
41	0140323	WIRE JUMPER 13 in	2	EA
42	0140332	SCR RDH 6-32 .750	1	EA
44	974129	SCR RHD #6-32 .75	6	EA
45	0090621	WIRE 16 R10I FEM188I 13	2	EA
46	0110471	WIRE 16 FEM188I DIODE 11	1	EA
47	0170335	WIRE 18 FEM188I FEM188I 5 DIO	1	EA
48	0181113	WIRE 16 R10I FEM250FI 9-25/25	1	EA
50	984049	NUT, #10-24 HEX	1	EA
51	0140366	WIRE 16 FEM250FI FEM188I 13.5	1	EA

Courtesy of Crane.Market

ELECTRICAL

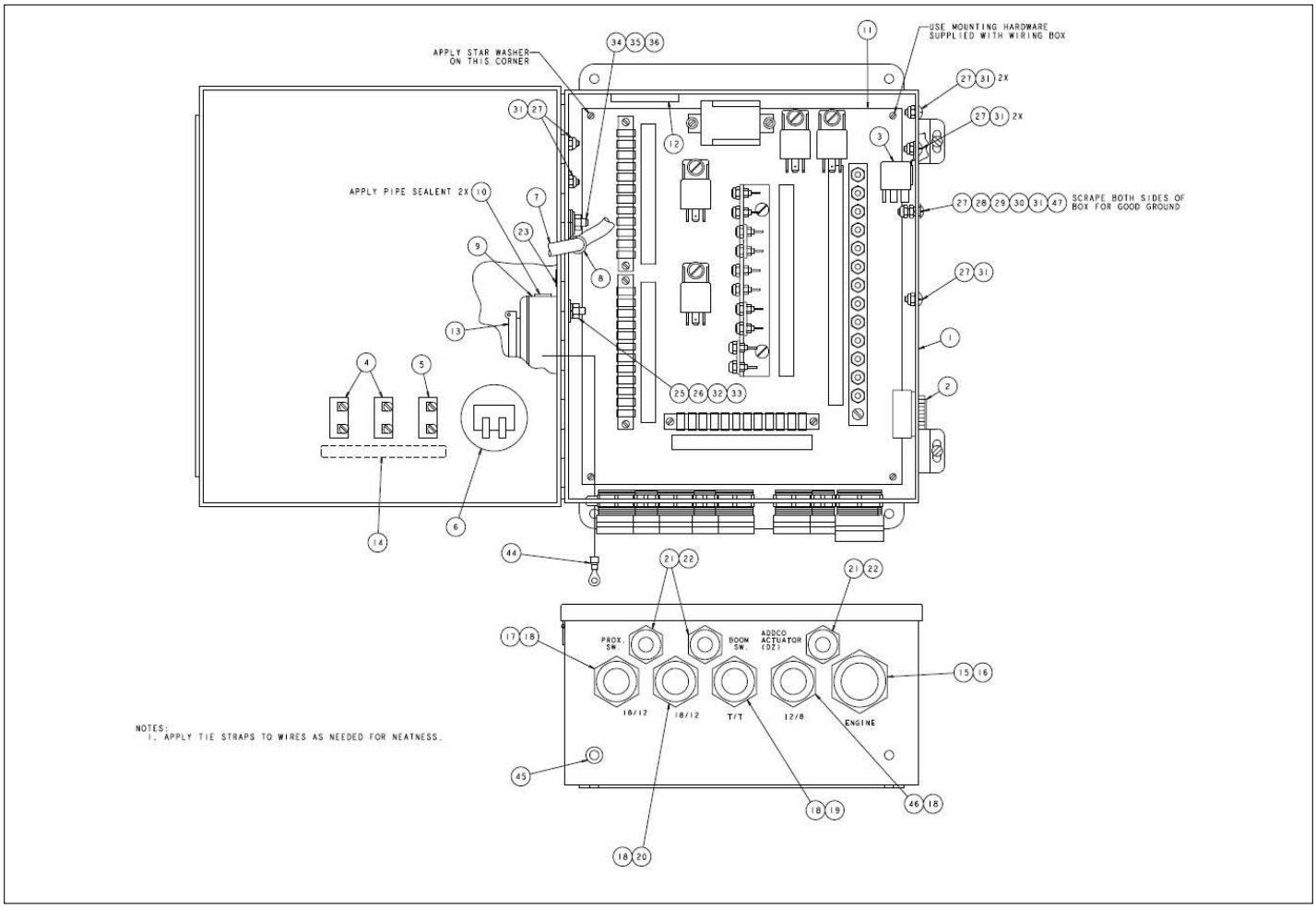

Courtesy of Crane.Market

Item	Part No.	Name	Qty	Uom
1	0081996	WIRING BOX - DRILLED	1	EA
2	3040411	ALARM MINI SIREN 6-28VDC-	1	EA
3	3040469	RELAY SPDT 12V 30AMP SONG	1	EA
4	3040252	CIRCUIT BREAKER	2	EA
5	3040069	CIRCUIT BREAKER	1	EA
6	3070001	HOURMETER	1	EA
7	0081997	INTERNAL WIRE ASSY	1	EA
8	5093001	CUSHION CLAMP #8 (1/2)	1	EA
9	3040118	EXTENSION W/GASKET	1	EA
10	3040121	CLOSE-UP PLUG	2	EA
11	0083467	PANEL SUB ASSY	1	EA
12	0070967	CORROSION INHIBITOR STICK-BACK	1	EA
13	3045278	OUTLET	1	EA
14	0111735	PLACARD, CIRCUIT BREAKER	1	EA
15	3040386	CONNECTOR	1	EA
16	3040387	NUT LKG HUB 1.00 SAMEAS 962139	1	EA
17	3040116	CONN .75 .500-.625	2	EA
18	3040110	NUT LKG HUB .750 SAMEAS 962129	5	EA
19	3040298	CONNECTOR	1	EA
20	3040285	CONN .75 .375-.500	1	EA
21	3040187	CONNECTOR	2	EA
22	3040070	LOCKNUT .50	2	EA
23	0150606	DECAL 125V 15AMP PWR TO PLATF	1	EA
24	5560655	RVT POP .094 DIA .125 DMD STL	2	EA
25	974239	SCREW RHD #6-32 .50	2	EA
26	984009	NUT #6-32 HEX	2	EA
27	5560648	SCR RDHD 10-24 .750	8	EA

Courtesy of Crane.Market

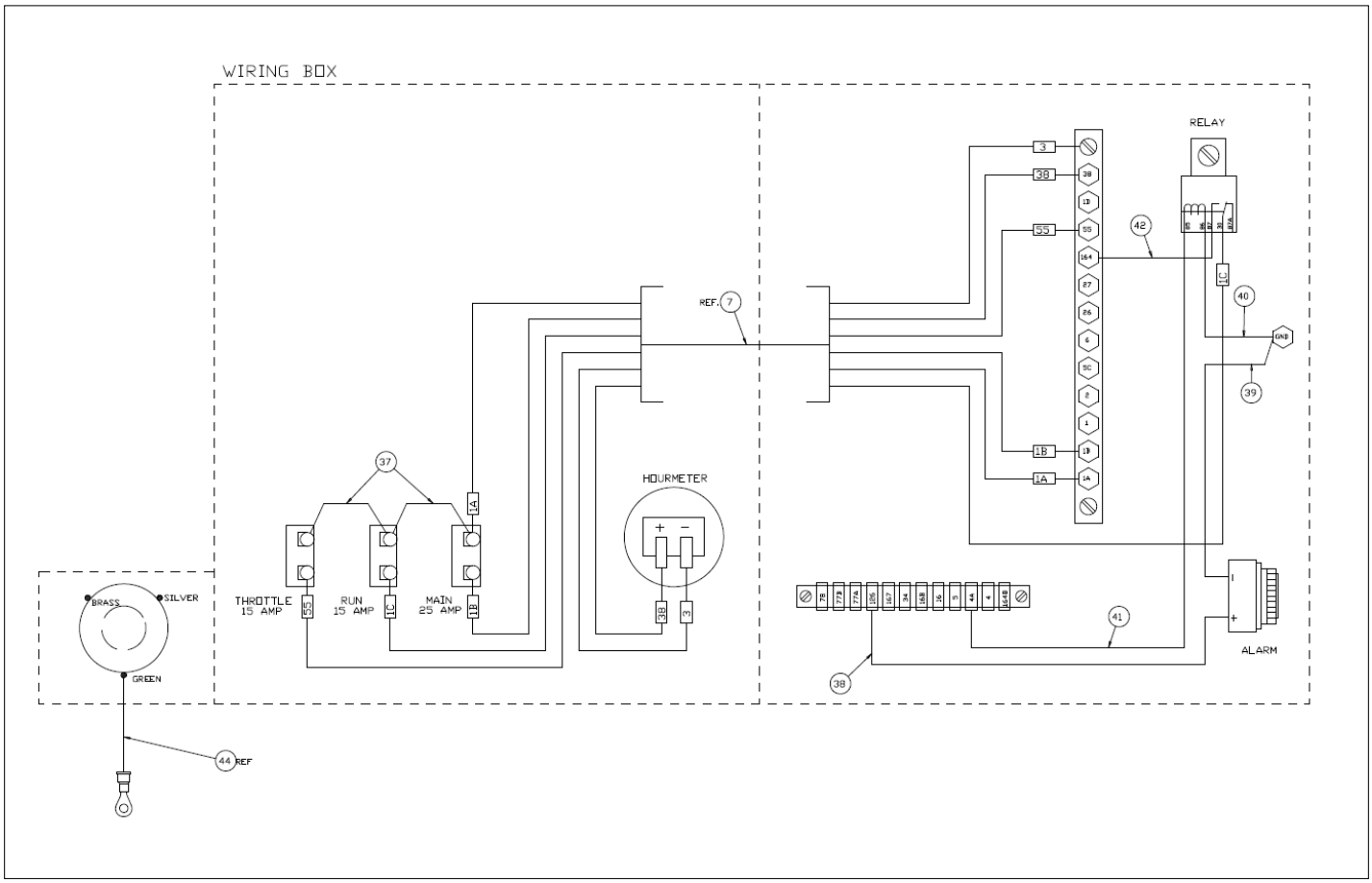

Courtesy of Crane.Market

Item	Part No.	Name	Qty	Uom
28	5560654	WASHER LOCK #10	1	EA
29	987089	#10 LOCK WASHER	1	EA
30	984049	NUT, #10-24 HEX	1	EA
31	5560034	NUT HEX LKG 10-24	8	EA
32	986159	WSHR FLAT 6	2	EA
33	987349	WSHR LOCK 6	2	EA
34	986019	WASHER FLAT .250	1	EA
35	970029	CAPSCREW 1/4-20 X 3/4 INCH LONG HEX HEAD GRADE 5	1	EA
36	5560004	NUT HEXHD .250-20 LKG	1	EA
37	0070735	WIRE 12 R 61 R101 24	2	EA
38	0181028	WIRE 16 R6 FEM188 10.5	1	EA
39	0240483	WIRE 16 R61 R101 8	1	EA
40	0081559	JUMPER WIRE	1	EA
41	0071528	JUMPER WIRE	1	EA
42	0073057	JUMPER WIRE	1	EA
44	0071561	JUMPER WIRE	1	EA
45	5569003	GROMMET .188 ID .438OD .125-AN9	1	EA
46	3040295	CONN .75 .625-.75	1	EA
47	5560703	WSHR STAR 10 EXTERNAL TOOTH	1	EA

Courtesy of Crane.Market

ELECTRICAL

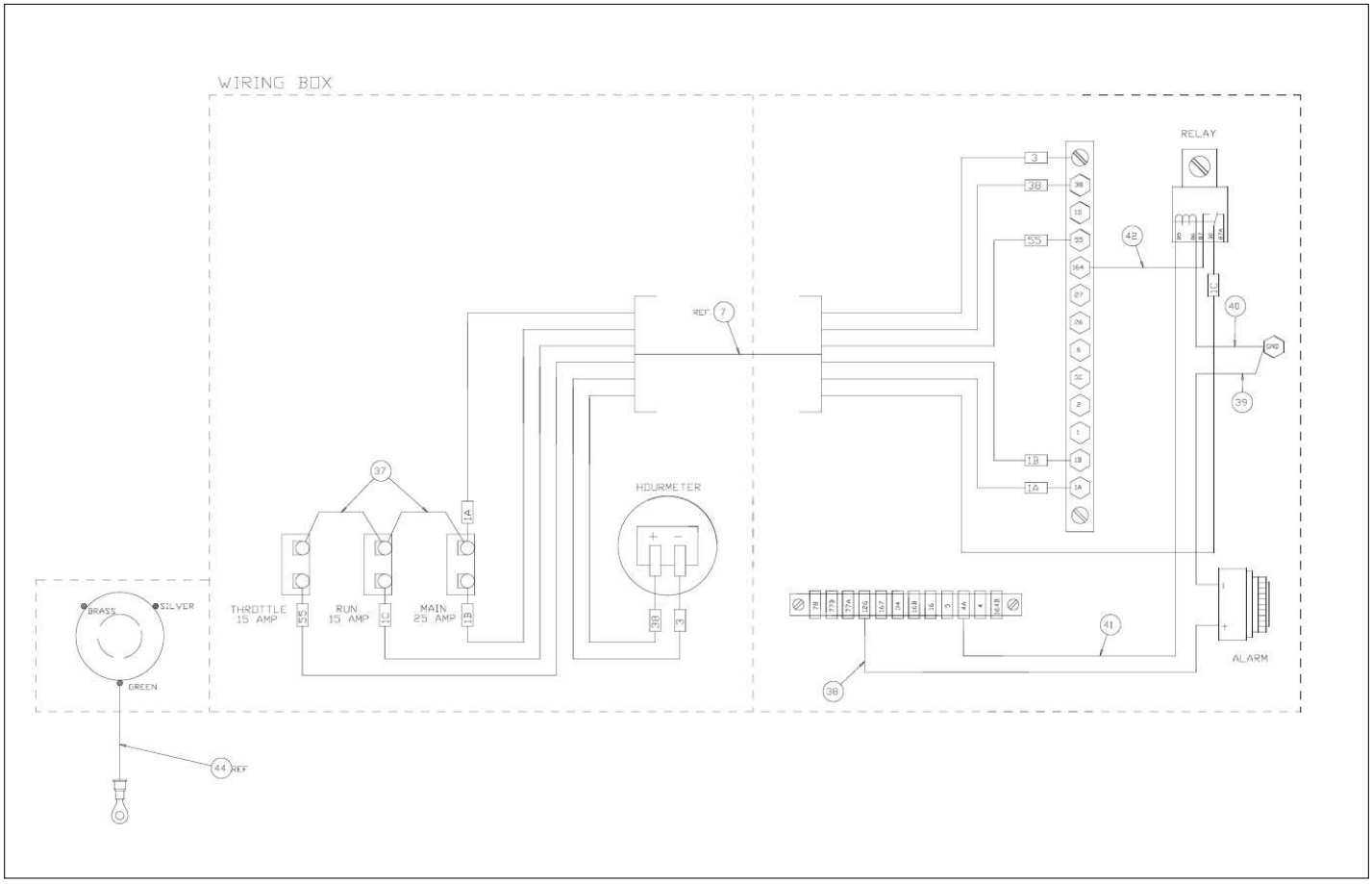

Courtesy of Crane.Market

Item	Part No.	Name	Qty	Uom
1	0081996	WIRING BOX - DRILLED	1	EA
2	3040411	ALARM MINI SIREN 6-28VDC-	1	EA
3	3040469	RELAY SPDT 12V 30AMP SONG	1	EA
4	3040252	CIRCUIT BREAKER	2	EA
5	3040069	CIRCUIT BREAKER	1	EA
6	3070001	HOURMETER	1	EA
7	0081997	INTERNAL WIRE ASSY	1	EA
8	5093001	CUSHION CLAMP #8 (1/2)	1	EA
9	3040118	EXTENSION W/GASKET	1	EA
10	3040121	CLOSE-UP PLUG	2	EA
11	0083467	PANEL SUB ASSY	1	EA
12	0070967	CORROSION INHIBITOR STICK-BACK	1	EA
13	345278	OUTLET	1	EA
14	0111735	PLACARD, CIRCUIT BREAKER	1	EA
15	3040386	CONNECTOR	1	EA
16	3040387	NUT LKG HUB 1.00 SAMEAS 962139	1	EA
17	3040116	CONN .75 .500-.625	1	EA
18	3040110	NUT LKG HUB .750 SAMEAS 962129	4	EA
19	3040298	CONNECTOR	1	EA
20	3040285	CONN .75 .375-.500	1	EA
21	3040187	CONNECTOR	3	EA
22	3040070	LOCKNUT .50	3	EA
23	0150606	DECAL 125V 15AMP PWR TO PLATF	1	EA
24	PNNA	POP RIVET AD32ABS	2	EA
25	PNNA	MACH. SCREW, #6-32	2	EA
26	PNNA	NUT, #6-32 HEX PLTD	2	EA
27	PNNA	#10-24 X 3/4" LG TRUSS HD	8	EA

Courtesy of Crane.Market

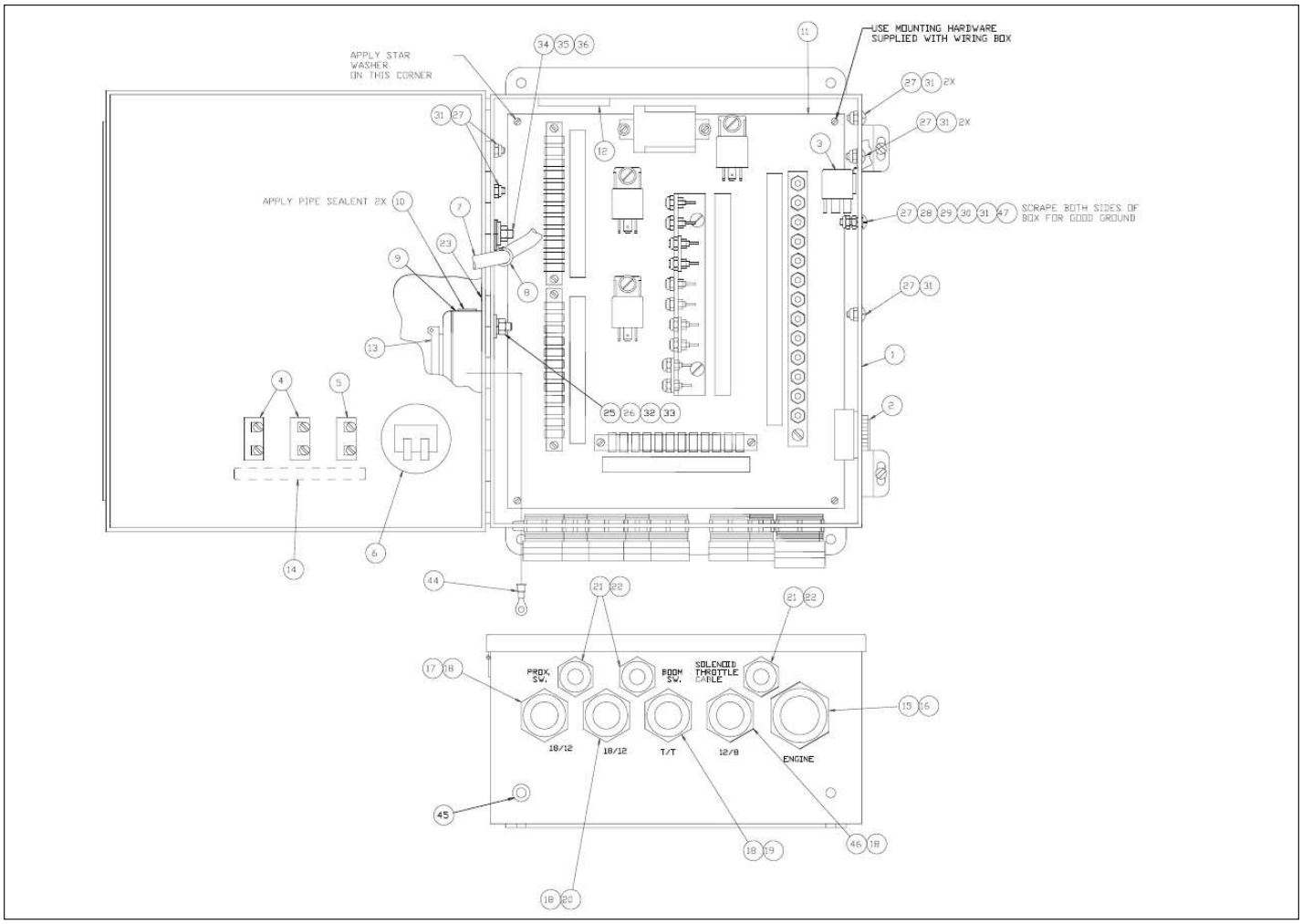

Courtesy of Crane.Market

Item	Part No.	Name	Qty	Uom
28	PNNA	#10 STAR WASHER	1	EA
29	PNNA	#10 LOCK WASHER	1	EA
30	PNNA	#10-24 HEX NUT	1	EA
31	PNNA	#10 ESNA	8	EA
32	PNNA	FLAT WASHER #6	2	EA
33	PNNA	WASHER, #6 LOCK	2	EA
34	PNNA	FLAT WASHER 1/4"	1	EA
35	PNNA	BLT HEXHD .25-20 X .75	1	EA
36	PNNA	NUT, 1/4-20 ESNA	1	EA
37	0070735	WIRE 12 R 61 R101 24	2	EA
38	0181028	WIRE 16 R6 FEM188 10.5	1	EA
39	0240483	WIRE 16 R61 R101 8	1	EA
40	0081559	JUMPER WIRE	1	EA
41	0071528	JUMPER WIRE	1	EA
42	0073057	JUMPER WIRE	1	EA
44	0071561	JUMPER WIRE	1	EA
45	5569003	GROMMET .188 ID .438OD .125-AN9	1	EA
46	3040295	CONN .75 .625-.75	1	EA
47	PNNA	WASHER #10 STAR TOOTH	1	EA

Courtesy of Crane.Market

ELECTRICAL

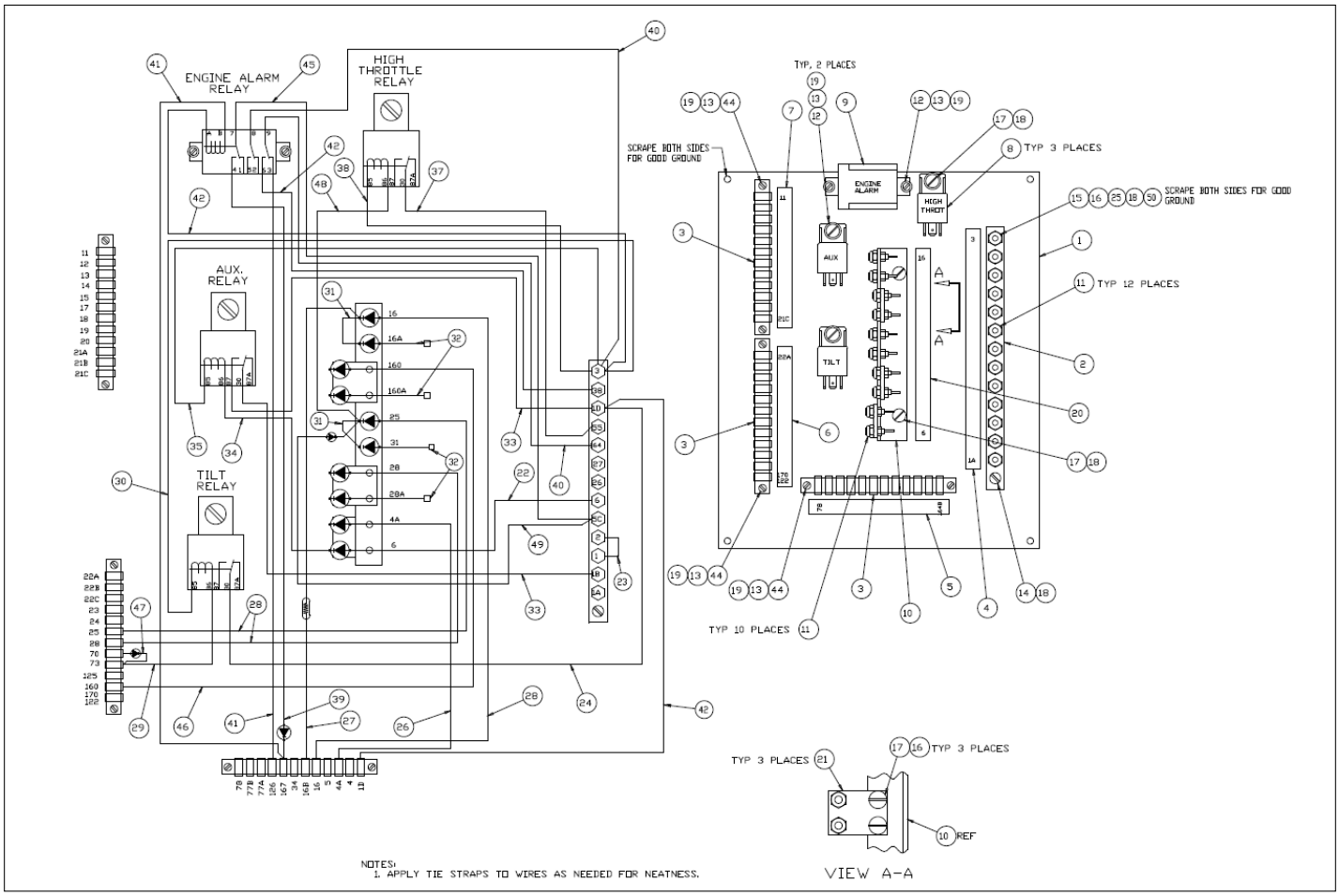

Courtesy of Crane.Market

Item	Part No.	Name	Qty	Uom
1	0180796	PANEL-DRILLED	1	EA
2	3044712	TERM STRIP (12) #10 STUD	1	EA
3	3040433	TERMINAL STRIP (12) .188 TAB	3	EA
4	0181552	DECAL TERM STRIP VERT 13	1	EA
5	0182187	DECAL, TERMINAL STRIP	1	EA
6	0181107	DECAL TERM STRIP VERT 12TERM	1	EA
7	0181106	DECAL TERM STRIP VERT 12TERM	1	EA
8	3040469	RELAY SPDT 12V 30AMP SONG	3	EA
9	3040287	RELAY, MIDTEX	1	EA
10	0150488	DIODE HOLDER -10PLC	1	EA
11	5560038	NUT #10-32 ESNA	22	EA
12	5560666	MACHINE SCREW #6-32 X 1/2 INCH LONG TRUSS HEAD	4	EA
13	986159	WSHR FLAT 6	6	EA
14	974689	SCR RDH MACH 10-24 .75	1	EA
15	974729	SCREW RHD MACH 10-24 1.25	1	EA
16	5560034	NUT HEX LKG 10-24	7	EA
17	5560609	SCR TRHD 10-24 .50	9	EA
18	987089	#10 LOCK WASHER	5	EA
19	987349	WSHR LOCK 6	10	EA
20	0181554	DECAL TERM STRIP VERT 10	1	EA
21	0073631	DIODE STAND-OFF 2-DIODE	3	EA
22	0070681	WIRE 16 R10 DIODE 7	1	EA
23	0070711	WIRE 12 R10I R10I 3	1	EA
24	0071812	WIRE 16 R10 FEM250FI 18	1	EA
25	5560703	WSHR STAR 10 EXTERNAL TOOTH	1	EA
26	0070682	WIRE 16 FEM188I DIODE 7	1	EA
27	0083778	RESISTOR WIRE (3 OHM)	1	EA

Courtesy of Crane.Market

Item	Part No.	Name	Qty	Uom
28	0140317	WIRE 16 FEM188I DIO 9	3	EA
29	0151205	WIRE 16 FEM188 FEM250FI 7	1	EA
30	0081560	WIRE 16 R10I FEM250FI 12	1	EA
31	0070724	WIRE 18 R10I R10I 3	2	EA
32	0181110	WIRE 16 FEM250FI DIO 2.25	4	EA
33	0181031	WIRE 12 R10 FEM250FI 11	2	EA
34	0081559	JUMPER WIRE	1	EA
35	0081515	WIRE 16 R10 FEM250FI 8	1	EA
37	0181136	WIRE 12 R10 FEM250FI 5	1	EA
38	0181111	WIRE 16 R10I FEM250FI 5	1	EA
39	0112164	DIODE WIRE	1	EA
40	0070713	WIRE 18 R10I FEM188I 10	2	EA
41	0140323	WIRE JUMPER 13 in	2	EA
42	0140332	SCR RDH 6-32 .750	3	EA
44	974129	SCR RHD #6-32 .75	6	EA
45	0090621	WIRE 16 R10I FEM188I 13	1	EA
46	0110471	WIRE 16 FEM188I DIODE 11	1	EA
47	0170335	WIRE 18 FEM188I FEM188I 5 DIO	1	EA
48	0181113	WIRE 16 R10I FEM250FI 9-25/25	1	EA
49	0073253	WIRE R101 R101 11 DIO SP	1	EA
50	984049	NUT, #10-24 HEX	1	EA

Courtesy of Crane.Market

ELECTRICAL

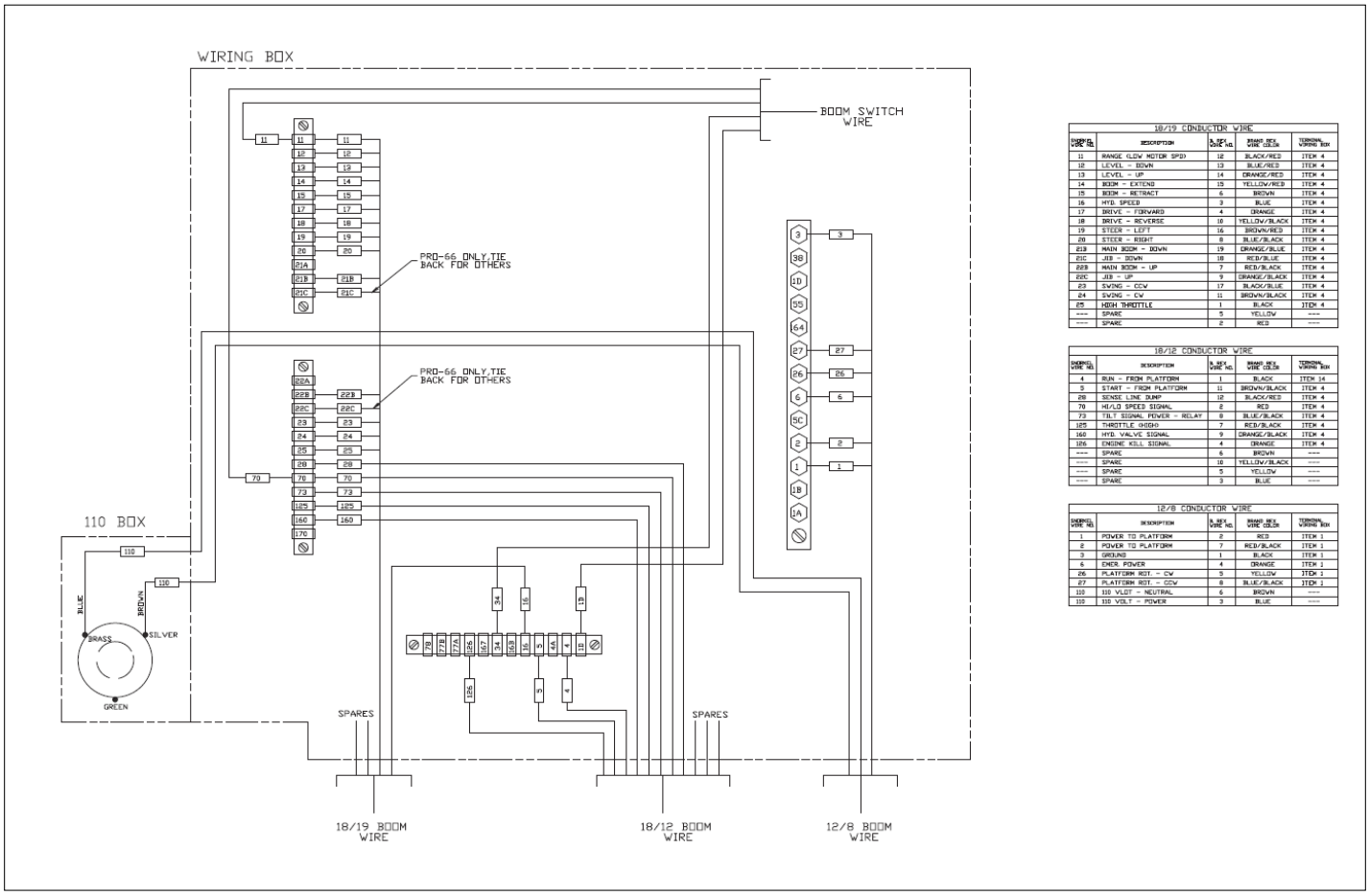

18/19 CONDUCTOR WIRE

ENGINEERING WIRE NO.	DESCRIPTION	S. DEX CABLE NO.	BRAND DEX WIRE COLOR	TERMINAL WIRING BOX
11	RANGE (LOW MOTOR SPD)	12	BLACK/RED	ITEM 4
12	LEVEL – DOWN	13	BLUE/RED	ITEM 4
13	LEVEL – UP	14	ORANGE/RED	ITEM 4
14	BOOM – EXTEND	15	YELLOW/RED	ITEM 4
15	BOOM – RETRACT	6	BROWN	ITEM 4
16	HYD. SPEED	3	BLUE	ITEM 4
17	DRIVE – FORWARD	4	ORANGE	ITEM 4
18	DRIVE – REVERSE	10	YELLOW/BLACK	ITEM 4
19	STEER – LEFT	16	BROWN/RED	ITEM 4
20	STEER – RIGHT	8	BLUE/BLACK	ITEM 4
21B	MAIN BOOM – DOWN	19	ORANGE/BLUE	ITEM 4
21C	JIB – DOWN	18	RED/BLUE	ITEM 4
22B	MAIN BOOM – UP	7	RED/BLACK	ITEM 4
22C	JIB – UP	9	ORANGE/BLACK	ITEM 4
23	SWING – CCW	17	BLACK/BLUE	ITEM 4
24	SWING – CW	11	BROWN/BLACK	ITEM 4
25	HIGH THROTTLE	1	BLACK	ITEM 4
----	SPARE	5	YELLOW	----
----	SPARE	2	RED	----

18/12 CONDUCTOR WIRE

ENGINEERING WIRE NO.	DESCRIPTION	S. DEX WIRE NO.	BRAND DEX WIRE COLOR	TERMINAL WIRING BOX
4	RUN – FROM PLATFORM	1	BLACK	ITEM 14
5	START – FROM PLATFORM	11	BROWN/BLACK	ITEM 4
28	SENSE LINE DUMP	12	BLACK/RED	ITEM 4
70	HI/LO SPEED SIGNAL	2	RED	ITEM 4
73	TILT SIGNAL POWER – RELAY	8	BLUE/BLACK	ITEM 4
125	THROTTLE (HIGH)	7	RED/BLACK	ITEM 4
160	HYD. VALVE SIGNAL	9	ORANGE/BLACK	ITEM 4
176	ENGINE KILL SIGNAL	4	ORANGE	ITEM 4
----	SPARE	6	BROWN	----
----	SPARE	10	YELLOW/BLACK	----
----	SPARE	5	YELLOW	----
----	SPARE	3	BLUE	----

12/8 CONDUCTOR WIRE

ENGINEERING WIRE NO.	DESCRIPTION	S. DEX WIRE NO.	BRAND DEX WIRE COLOR	TERMINAL WIRING BOX
1	POWER TO PLATFORM	2	RED	ITEM 1
2	POWER TO PLATFORM	7	RED/BLACK	ITEM 1
3	GROUND	1	BLACK	ITEM 1
6	EMER. POWER	4	ORANGE	ITEM 1
26	PLATFORM ROT. – CW	5	YELLOW	ITEM 1
27	PLATFORM ROT. – CCW	8	BLUE/BLACK	ITEM 1
110	110 VLOT – NEUTRAL	6	BROWN	----
115	110 VOLT – POWER	3	BLUE	----

Courtesy of Crane.Market

Item	Part No.	Name	Qty	Uom
1	3044854	REPLACEMENT TERMINAL	1	EA
2	3044146	TERM R10I 22/18	1	EA
3	3044142	TERM R6I 22/18-PN18-6R-M	1	EA
4	3046972	REPLACEMENT TERMINAL	45	EA
5	PNNA	PLATFORM CONTROL BOX SUBASSY	1	EA
6	PNNA	REFER TO CHART	4	EA
7	PNNA	REFER TO CHART	8	EA
8	PNNA	REFER TO CHART	4	EA
9	5093004	CLAMP	1	EA
10	970029	CAPSCREW 1/4-20 X 3/4 INCH LONG HEX HEAD GRADE 5	1	EA
11	986019	WASHER FLAT .250	1	EA
12	987099	WASHER LOCK .250	1	EA
13	0071800	PLATFORM FOOT SWITCH	1	EA
14	3040047	TERM FEM250FI 22/18	5	EA

Courtesy of Crane.Market

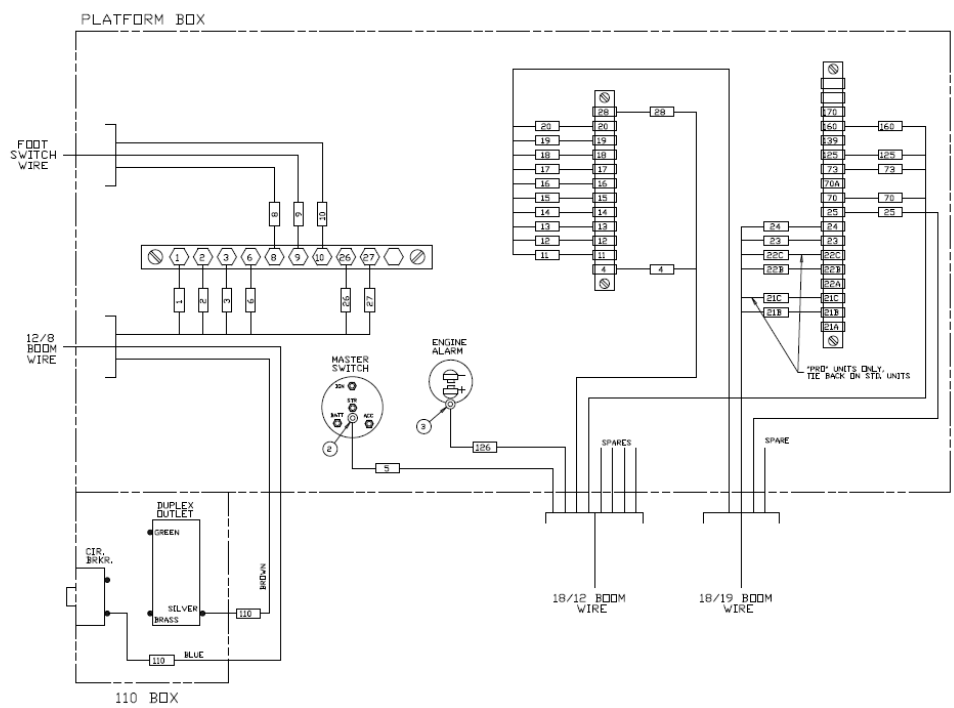

	18/19 CONDUCTOR WIRE				
	SHORNEL WIRE NO.	DESCRIPTION	B. BOX WIRE NO.	BRAND BOX WIRE COLOR	TERMINAL PLATFORM BOX
	11	RANGE (LOW MOTOR SPD)	12	BLACK/RED	ITEM 4
	12	LEVEL - DOWN	13	BLUE/RED	ITEM 4
	13	LEVEL - UP	14	ORANGE/RED	ITEM 4
	14	BOOM - EXTEND	15	YELLOW/RED	ITEM 4
	15	BOOM - RETRACT	6	BROWN	ITEM 4
	16	HYD. SPEED	3	BLUE	ITEM 4
	17	DRIVE - FORWARD	4	ORANGE	ITEM 4
	18	DRIVE - REVERSE	10	YELLOW/BLACK	ITEM 4
	19	STEER - LEFT	16	BROWN/RED	ITEM 4
	20	STEER - RIGHT	8	BLUE/BLACK	ITEM 4
	21B	MAIN BOOM - DOWN	19	ORANGE/BLUE	ITEM 4
(PRO-66 ONLY)	21C	JIB - DOWN	18	RED/BLUE	ITEM 4
	22B	MAIN BOOM - UP	7	RED/BLACK	ITEM 4
(PRO-66 ONLY)	22C	JIB - UP	9	ORANGE/BLACK	ITEM 4
	23	SWING - CCW	17	BLACK/BLUE	ITEM 4
	24	SWING - CW	11	BROWN/BLACK	ITEM 4
	25	HIGH THROTTLE	1	BLACK	
	---	SPARE	5	YELLOW	---
	---	SPARE	2	RED	---

18/12 CONDUCTOR WIRE				
SHORNEL WIRE NO.	DESCRIPTION	B. BOX WIRE NO.	BRAND BOX WIRE COLOR	TERMINAL PLATFORM BOX
4	RUN - FROM PLATFORM	1	BLACK	ITEM 4
5	START - FROM PLATFORM	11	BROWN/BLACK	ITEM 2
28	SENSE LINE DUMP	12	BLACK/RED	ITEM 4
70	HI/LO SPEED SIGNAL	2	RED	ITEM 4
73	TILT SIGNAL POWER - RELAY	8	BLUE/BLACK	ITEM 4
125	THROTTLE (HIGH)	7	RED/BLACK	ITEM 4
160	HYD. VALVE SIGNAL	9	ORANGE/BLACK	ITEM 4
126	ENGINE KILL SIGNAL	4	ORANGE	ITEM 3
---	SPARE	6	BROWN	---
---	SPARE	10	YELLOW/BLACK	---
---	SPARE	5	YELLOW	---
---	SPARE	3	BLUE	---

Courtesy of Crane.Market

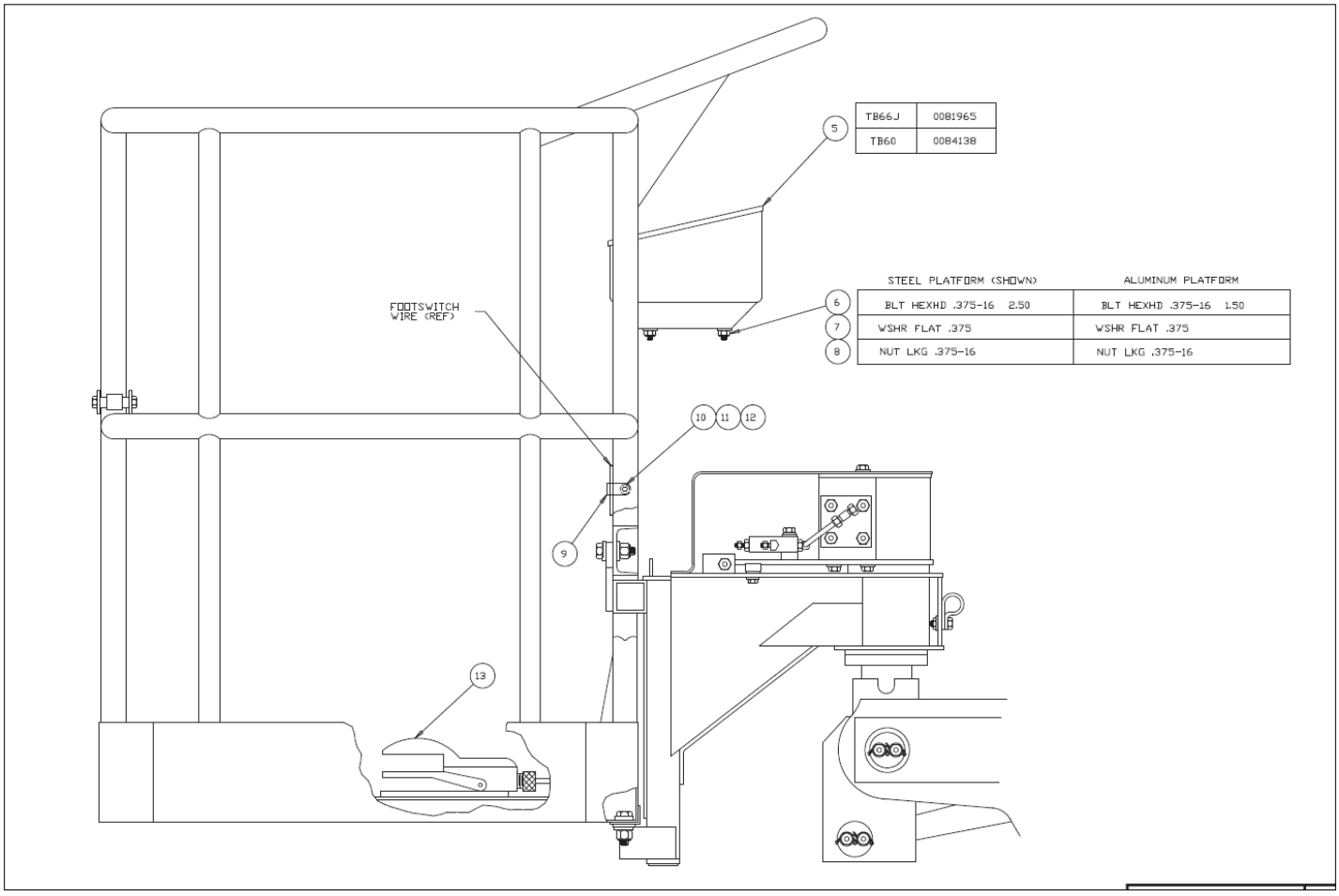

Courtesy of Crane.Market

ELECTRICAL

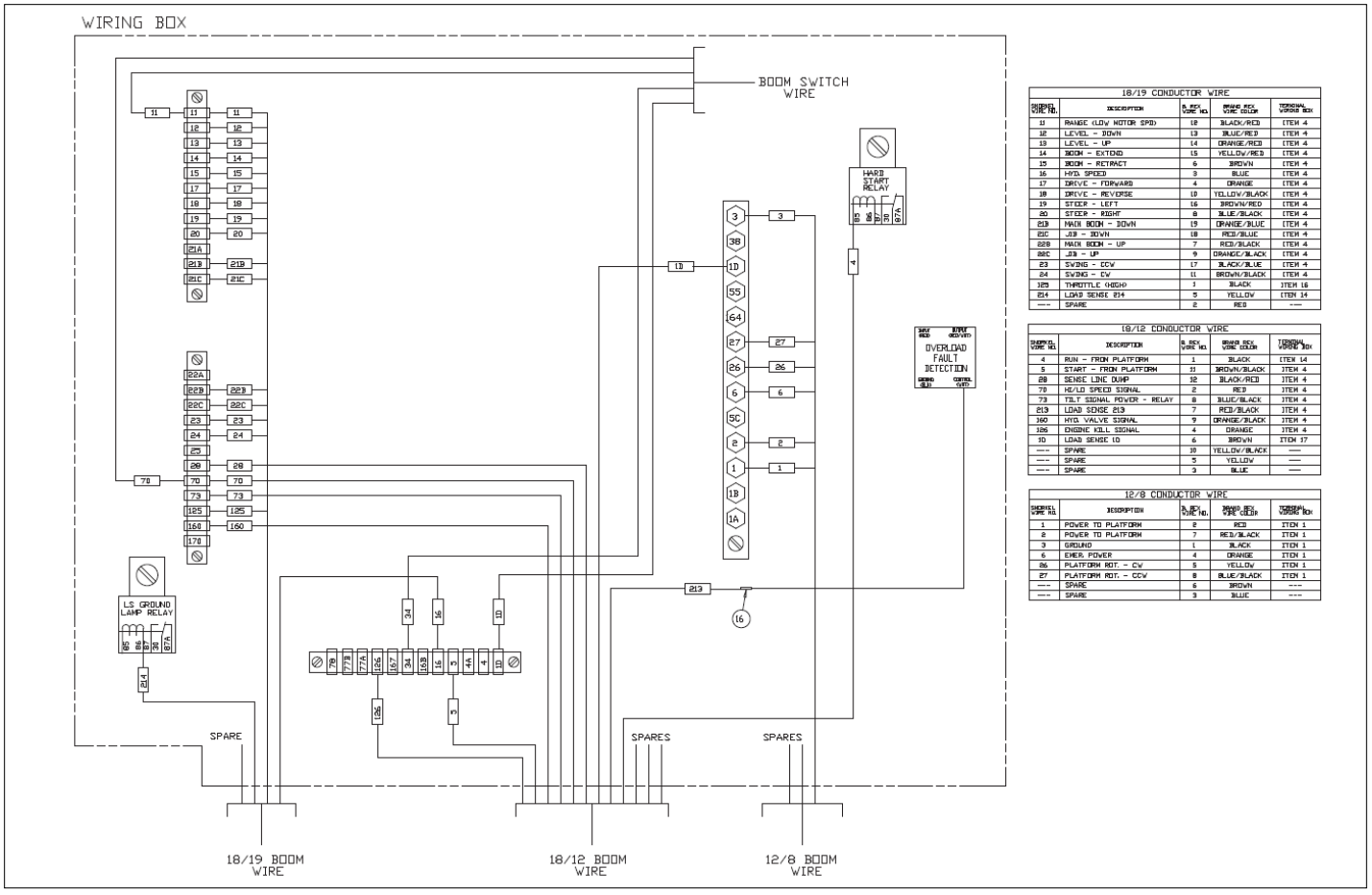

18/19 CONDUCTOR WIRE

DESIRED WIRE NO.	DESCRIPTION	B. REF. WIRE NO.	BRAID REF. WIRE COLOR	TERMINAL WIRING BOX
11	RANGE (LOW MOTOR SPD)	10	BLACK/RED	ITEM 4
12	LEVEL - DOWN	13	BLUE/RED	ITEM 4
13	LEVEL - UP	14	ORANGE/RED	ITEM 4
14	BOOM - EXTEND	15	YELLOW/RED	ITEM 4
15	BOOM - RETRACT	6	BROWN	ITEM 4
16	HYD SPEED	3	BLUE	ITEM 4
17	DRIVE - FORWARD	4	ORANGE	ITEM 4
18	DRIVE - REVERSE	12	YELLOW/BLACK	ITEM 4
19	STEER - LEFT	16	BROWN/RED	ITEM 4
20	STEER - RIGHT	8	BLUE/BLACK	ITEM 4
21B	MAIN BOOM - DOWN	19	ORANGE/BLUE	ITEM 4
21C	JIB - DOWN	18	RED/BLUE	ITEM 4
22B	MAIN BOOM - UP	7	RED/BLACK	ITEM 4
22C	JIB - UP	9	ORANGE/BLACK	ITEM 4
23	SWING - CCW	17	BLACK/BLUE	ITEM 4
24	SWING - CW	11	BROWN/BLACK	ITEM 4
125	THROTTLE (HIGH)	1	BLACK	ITEM 18
214	LOAD SENSE 214	5	YELLOW	ITEM 14
---	SPARE	2	RED	---

18/12 CONDUCTOR WIRE

DESIRED WIRE NO.	DESCRIPTION	B. REF. WIRE NO.	BRAID REF. WIRE COLOR	TERMINAL WIRING BOX
4	RUN - FROM PLATFORM	1	BLACK	ITEM 14
5	START - FROM PLATFORM	11	BROWN/BLACK	ITEM 4
28	SENSE LINE DUMP	12	BLACK/RED	ITEM 4
70	HI/LO SPEED SIGNAL	2	RED	ITEM 4
73	TILT SIGNAL POWER - RELAY	8	BLUE/BLACK	ITEM 4
213	LOAD SENSE 213	7	RED/BLACK	ITEM 4
160	HYD VALVE SIGNAL	9	ORANGE/BLACK	ITEM 4
126	ENGINE KILL SIGNAL	4	ORANGE	ITEM 4
1D	LOAD SENSE 1D	6	BROWN	ITEM 17
---	SPARE	10	YELLOW/BLACK	----
---	SPARE	5	YELLOW	----
---	SPARE	3	BLUE	----

12/8 CONDUCTOR WIRE

DESIRED WIRE NO.	DESCRIPTION	B. REF. WIRE NO.	BRAID REF. WIRE COLOR	TERMINAL WIRING BOX
1	POWER TO PLATFORM	2	RED	ITEM 1
2	POWER TO PLATFORM	7	RED/BLACK	ITEM 1
3	GROUND	1	BLACK	ITEM 1
6	EMER POWER	4	ORANGE	ITEM 1
26	PLATFORM ROT. - CW	5	YELLOW	ITEM 1
27	PLATFORM ROT. - CCW	8	BLUE/BLACK	ITEM 1
---	SPARE	6	BROWN	---
---	SPARE	3	BLUE	---

Courtesy of Crane.Market

Item	Part No.	Name	Qty	Uom
1	3044854	REPLACEMENT TERMINAL	1	EA
2	3044146	TERM R10I 22/18	1	EA
3	3044142	TERM R6I 22/18-PN18-6R-M	1	EA
4	3046972	REPLACEMENT TERMINAL	45	EA
5	0084187	PLATF CONTROL BOX ASSY TB60 CE	1	EA
6	PNNA	REFER TO CHART PAGE 127	4	EA
7	PNNA	REFER TO CHART PAGE 127	8	EA
8	PNNA	REFER TO CHART PAGE 127	4	EA
9	5093004	CLAMP	1	EA
10	970029	CAPSCREW 1/4-20 X 3/4 INCH LONG HEX HEAD GRADE 5	1	EA
11	986019	WASHER FLAT .250	1	EA
12	987099	WASHER LOCK .250	1	EA
13	0071800	PLATFORM FOOT SWITCH	1	EA
14	3040047	TERM FEM250FI 22/18	5	EA
15	3044072	TERM BUTT CONN INSUL 12/10	1	EA
16	3044070	TERM BUTT 22/18	1	EA
17	3044146	TERM R10I 22/18	1	EA

Courtesy of Crane.Market

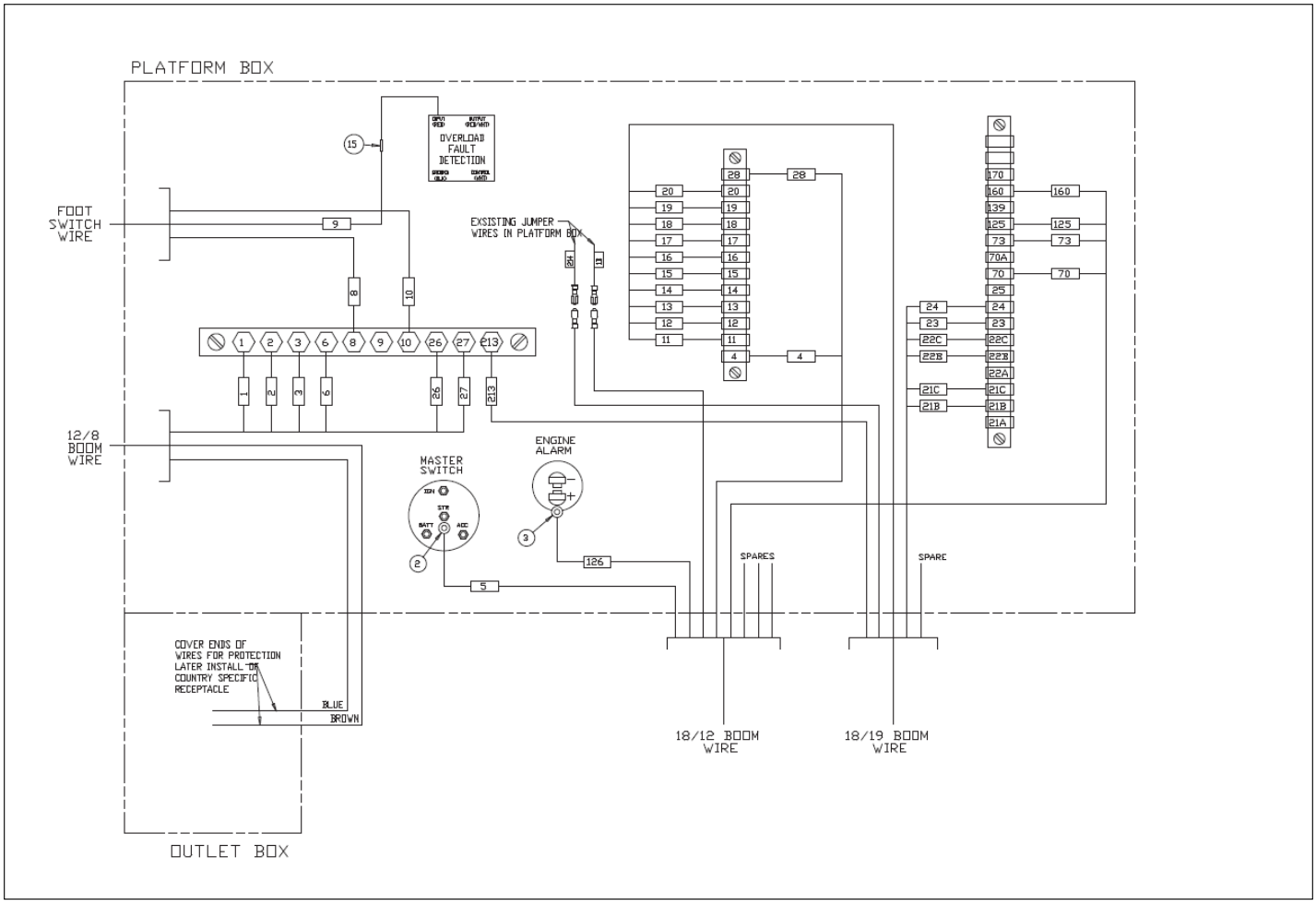

Courtesy of Crane.Market

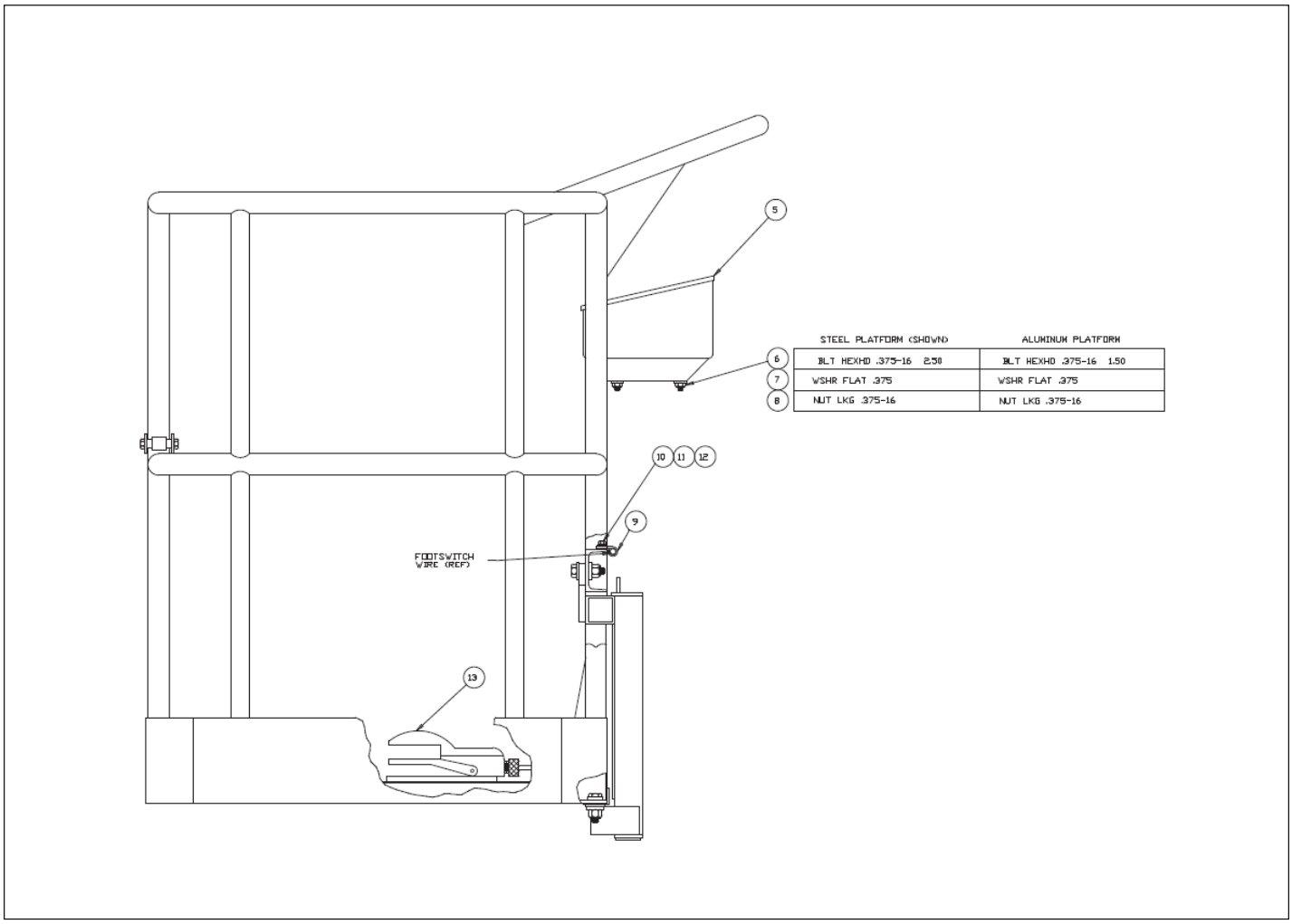

	STEEL PLATFORM (SHOWN)	ALUMINUM PLATFORM
6	BLT HEXHD .375-16 2.50	BLT HEXHD .375-16 1.50
7	WSHR FLAT .375	WSHR FLAT .375
8	NUT LKG .375-16	NUT LKG .375-16

Courtesy of Crane.Market

ELECTRICAL

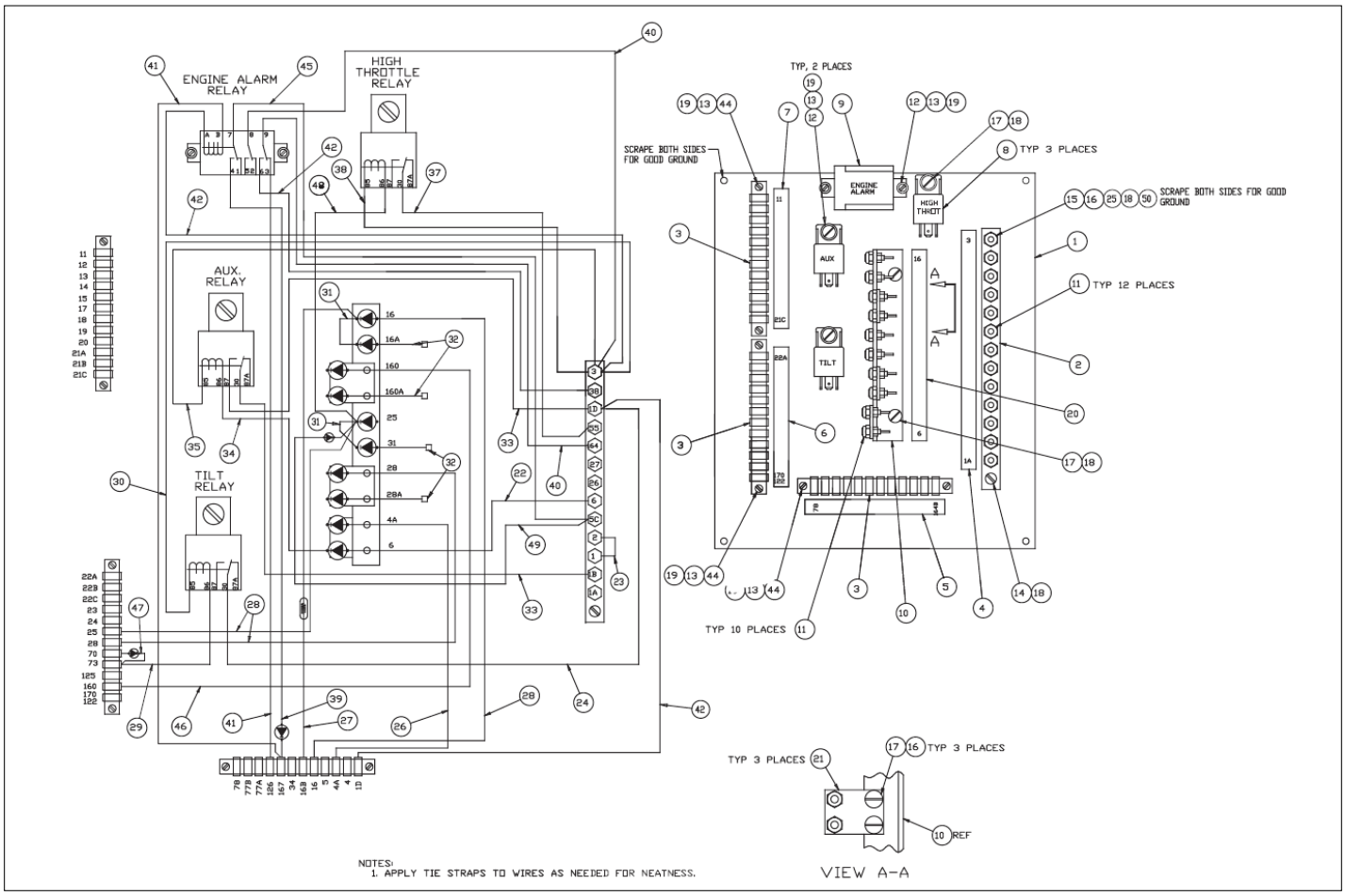

Courtesy of Crane.Market

Item	Part No.	Name	Qty	Uom
1	0180796	PANEL-DRILLED	1	EA
2	3044712	TERM STRIP (12) #10 STUD	1	EA
3	3040433	TERMINAL STRIP (12) .188 TAB	3	EA
4	0181552	DECAL TERM STRIP VERT 13	1	EA
5	0182187	DECAL, TERMINAL STRIP	1	EA
6	0181107	DECAL TERM STRIP VERT 12TERM	1	EA
7	0181106	DECAL TERM STRIP VERT 12TERM	1	EA
8	3040469	RELAY SPDT 12V 30AMP SONG	3	EA
9	3040287	RELAY, MIDTEX	1	EA
10	0150488	DIODE HOLDER -10PLC	1	EA
11	5560038	NUT #10-32 ESNA	22	EA
12	5560666	MACHINE SCREW #6-32 X 1/2 INCH LONG TRUSS HEAD	4	EA
13	986159	WSHR FLAT 6	6	EA
14	974689	SCR RDH MACH 10-24 .75	1	EA
15	974729	SCREW RHD MACH 10-24 1.25	1	EA
16	5560034	NUT HEX LKG 10-24	7	EA
17	5560609	SCR TRHD 10-24 .50	9	EA
18	987089	#10 LOCK WASHER	5	EA
19	987349	WSHR LOCK 6	10	EA
20	0181554	DECAL TERM STRIP VERT 10	1	EA
21	0073631	DIODE STAND-OFF 2-DIODE	3	EA
22	0070681	WIRE 16 R10 DIODE 7	1	EA
23	0070711	WIRE 12 R10I R10I 3	1	EA
24	0071812	WIRE 16 R10 FEM250FI 18	1	EA
25	5560703	WSHR STAR 10 EXTERNAL TOOTH	1	EA
26	0070682	WIRE 16 FEM188I DIODE 7	1	EA
27	0083778	RESISTOR WIRE (3 OHM)	1	EA

Courtesy of Crane.Market

Item	Part No.	Name	Qty	Uom
28	0140317	WIRE 16 FEM188I DIO 9	2	EA
29	0151205	WIRE 16 FEM188 FEM250FI 7	1	EA
30	0081560	WIRE 16 R10I FEM250FI 12	1	EA
31	0070724	WIRE 18 R10I R10I 3	2	EA
32	0181110	WIRE 16 FEM250FI DIO 2.25	4	EA
33	0181031	WIRE 12 R10 FEM250FI 11	2	EA
34	0081559	JUMPER WIRE	1	EA
35	0081515	WIRE 16 R10 FEM250FI 8	1	EA
37	0181136	WIRE 12 R10 FEM250FI 5	1	EA
38	0181111	WIRE 16 R10I FEM250FI 5	1	EA
39	0112164	DIODE WIRE	1	EA
40	0070713	WIRE 18 R10I FEM188I 10	2	EA
41	0140323	WIRE JUMPER 13 in	2	EA
42	0140332	SCR RDH 6-32 .750	3	EA
44	974129	SCR RHD #6-32 .75	6	EA
45	0090621	WIRE 16 R10I FEM188I 13	1	EA
46	0110471	WIRE 16 FEM188I DIODE 11	1	EA
47	0170335	WIRE 18 FEM188I FEM188I 5 DIO	1	EA
48	0181113	WIRE 16 R10I FEM250FI 9-25/25	1	EA
49	0073253	WIRE R101 R101 11 DIO SP	1	EA
50	984049	NUT, #10-24 HEX	1	EA

Courtesy of Crane.Market

ELECTRICAL

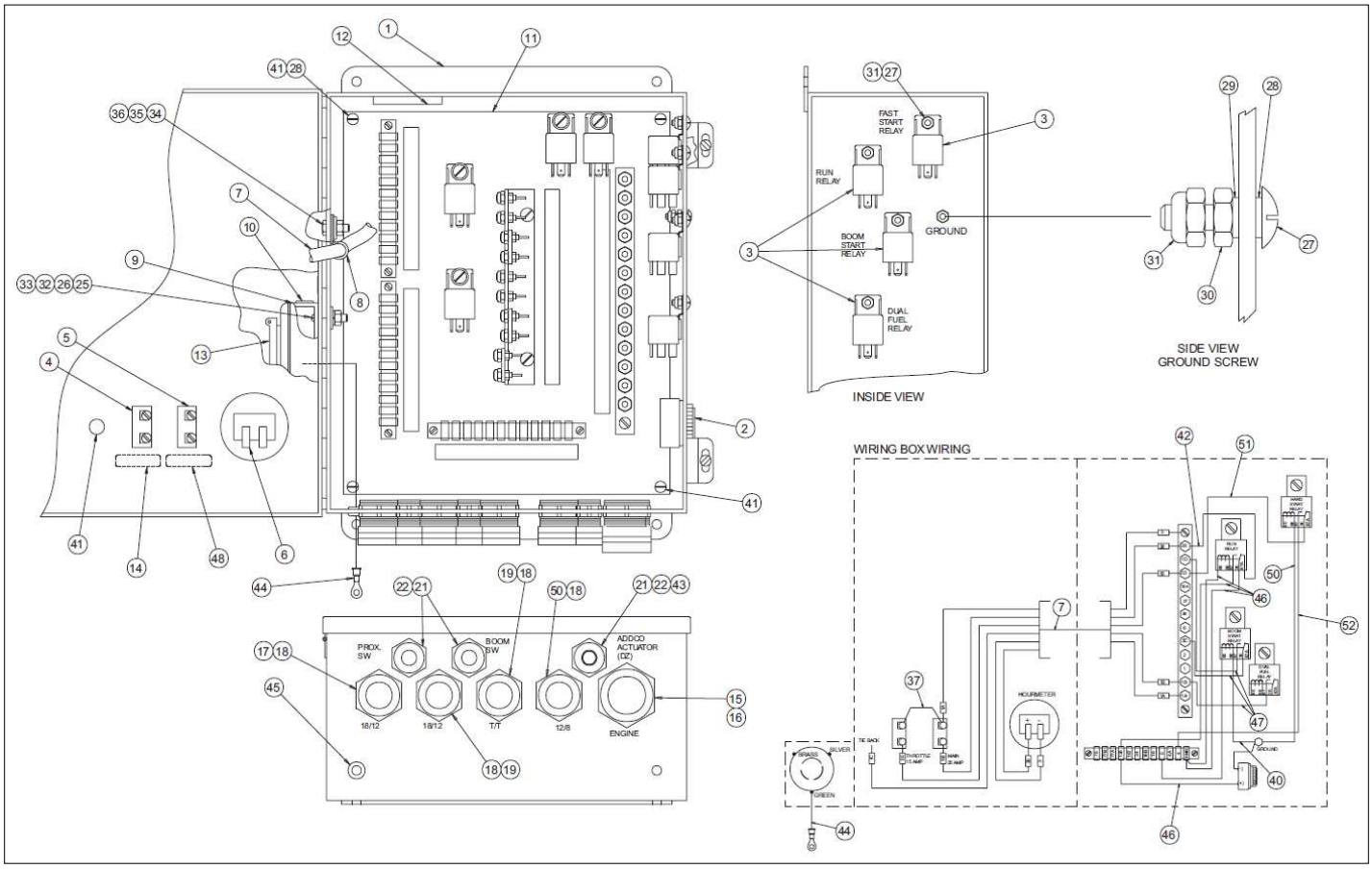

Courtesy of Crane.Market

Item	Part No.	Name	Qty	Uom
1	0081996	WIRING BOX - DRILLED	1	EA
2	3040411	ALARM MINI SIREN 6-28VDC-	1	EA
3	3040469	RELAY SPDT 12V 30AMP SONG	3	EA
4	3040252	CIRCUIT BREAKER	1	EA
5	3040069	CIRCUIT BREAKER	1	EA
6	3070001	HOURMETER	1	EA
7	0081997	INTERNAL WIRE ASSY	1	EA
8	5093000	CLAMP	1	EA
9	3040118	EXTENSION W/GASKET	1	EA
10	3040121	CLOSE-UP PLUG	4	EA
11	0082688	WIRING BOX PANEL, FORD LRG-425	1	EA
12	0070967	CORROSION INHIBITOR STICK-BACK	1	EA
13	3045278	OUTLET	1	EA
14	0170623	DECAL, THROTTLE	1	EA
15	3040386	CONNECTOR	1	EA
16	3040387	NUT LKG HUB 1.00 SAMEAS 962139	1	EA
17	3040116	CONN .75 .500-.625	1	EA
18	3040110	NUT LKG HUB .750 SAMEAS 962129	4	EA
19	3040298	CONNECTOR	1	EA
20	3040285	CONN .75 .375-.500	1	EA
21	3040187	CONNECTOR	3	EA
22	3040070	LOCKNUT .50	3	EA
23	0070921	DECAL 125 VOLTS 15 AMPS-PACKAG	1	EA
24	5560655	RVT POP .094 DIA .125 DMD STL	2	EA
25	974239	SCREW RHD #6-32 .50	2	EA
26	984009	NUT #6-32 HEX	2	EA

Courtesy of Crane.Market

Item	Part No.	Name	Qty	Uom
27	5560648	SCR RDHD 10-24 .750	5	EA
28	5560654	WASHER LOCK #10	2	EA
29	987089	#10 LOCK WASHER	1	EA
30	984049	NUT, #10-24 HEX	1	EA
31	5560034	NUT HEX LKG 10-24	4	EA
32	986159	WSHR FLAT 6	2	EA
33	987349	WSHR LOCK 6	2	EA
34	986019	WASHER FLAT .250	1	EA
35	970029	CAPSCREW 1/4-20 X 3/4 INCH LONG HEX HEAD GRADE 5	1	EA
36	5560004	NUT HEXHD .250-20 LKG	1	EA
37	0070735	WIRE 12 R 61 R101 24	2	EA
38	0181028	WIRE 16 R6 FEM188 10.5	1	EA
39	0240483	WIRE 16 R61 R101 8	1	EA
40	0081559	JUMPER WIRE	1	EA
41	5560667	MACHINE SCREW #10-24 X 3/8 INCH LONG PAN HEAD	4	EA
42	0073057	JUMPER WIRE	1	EA
43	970469	BOLT HEXHD .375-16 1.00 GR. 5	1	EA
44	0071561	JUMPER WIRE	1	EA
45	5569003	GROMMET .188 ID .438OD .125-AN9	1	EA
46	0071528	JUMPER WIRE	4	EA
47	0071555	WIRE 16 R1OI FEM250I 6	3	EA
48	0071778	DECAL, MAIN CIRCUIT BREAKER	1	EA
49	3040115	HOLE PLUG, 1/2 INCH DIAMETER	1	EA
50	3040295	CONN .75 .625-.75	1	EA
51	0181031	WIRE 12 R10 FEM250FI 11	1	EA
52	0112231	JUMPER WIRE	1	EA

Courtesy of Crane.Market

ELECTRICAL

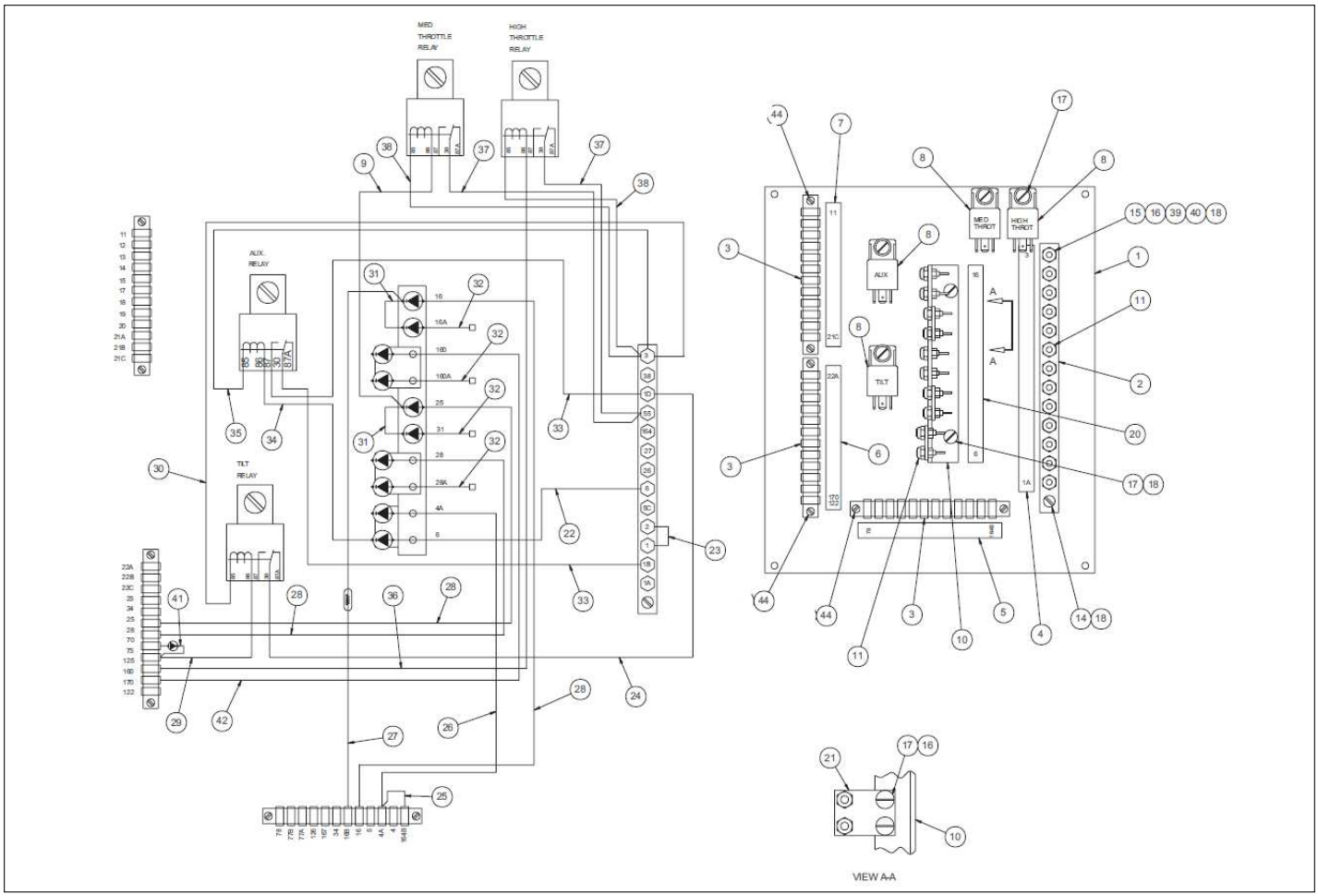

Courtesy of Crane.Market

Item	Part No.	Name	Qty	Uom
1	0180796	PANEL-DRILLED	1	EA
2	3044712	TERM STRIP (12) #10 STUD	1	EA
3	3040433	TERMINAL STRIP (12) .188 TAB	3	EA
4	0181552	DECAL TERM STRIP VERT 13	1	EA
5	0181553	DECAL TERM STRIP VERT 12	1	EA
6	0181107	DECAL TERM STRIP VERT 12TERM	1	EA
7	0181106	DECAL TERM STRIP VERT 12TERM	1	EA
8	3040469	RELAY SPDT 12V 30AMP SONG	4	EA
9	0181113	WIRE 16 R10I FEM250FI 9-25/25	1	EA
10	0150488	DIODE HOLDER -10PLC	1	EA
Not Shown	3040108	REPLACEMENT DIODE – ORDER QUANTITY REQUIRED		EA
11	5560038	NUT #10-32 ESNA	22	EA
12	974239	SCREW RHD #6-32 .50	1	EA
13	986159	WSHR FLAT 6	3	EA
14	974689	SCR RDH MACH 10-24 .75	1	EA
15	974729	SCREW RHD MACH 10-24 1.25	1	EA
16	5560034	NUT HEX LKG 10-24	7	EA
17	5560609	SCR TRHD 10-24 .50	12	EA
18	987089	#10 LOCK WASHER	3	EA
19	987349	WSHR LOCK 6	10	EA
20	0181554	DECAL TERM STRIP VERT 10	1	EA
21	0073631	DIODE STAND-OFF 2-DIODE	3	EA
22	0070681	WIRE 16 R10 DIODE 7	1	EA
23	0070711	WIRE 12 R10I R10I 3	1	EA
24	0071812	WIRE 16 R10 FEM250FI 18	2	EA
25	0110458	JUMPER WIRE	1	EA
26	0070682	WIRE 16 FEM188I DIODE 7	1	EA
27	0181073	RESISTER WIRE 5 OHM	1	EA

Courtesy of Crane.Market

Item	Part No.	Name	Qty	Uom
28	0140317	WIRE 16 FEM188I DIO 9	3	EA
29	0151205	WIRE 16 FEM188 FEM250FI 7	1	EA
30	0081560	WIRE 16 R10I FEM250FI 12	1	EA
31	0070724	WIRE 18 R10I R10I 3	2	EA
32	0180110	DIODE WIRE – INCLUDES 3040108 DIODE	4	EA
33	0181031	WIRE 12 R10 FEM250FI 11	2	EA
34	0081559	JUMPER WIRE	1	EA
35	0081515	WIRE 16 R10 FEM250FI 8	1	EA
36	0181030	WIRE 16 FEM188 FEM250FI 15	1	EA
37	0181136	WIRE 12 R10 FEM250FI 5	2	EA
38	0181111	WIRE 16 R10I FEM250FI 5	2	EA
39	984049	NUT, #10-24 HEX	1	EA
40	5560654	WASHER LOCK #10	1	EA
41	0170335	WIRE 18 FEM188I FEM188I 5 DIO	1	EA
42	0110471	WIRE 16 FEM188I DIODE 11	1	EA

Courtesy of Crane.Market

ELECTRICAL

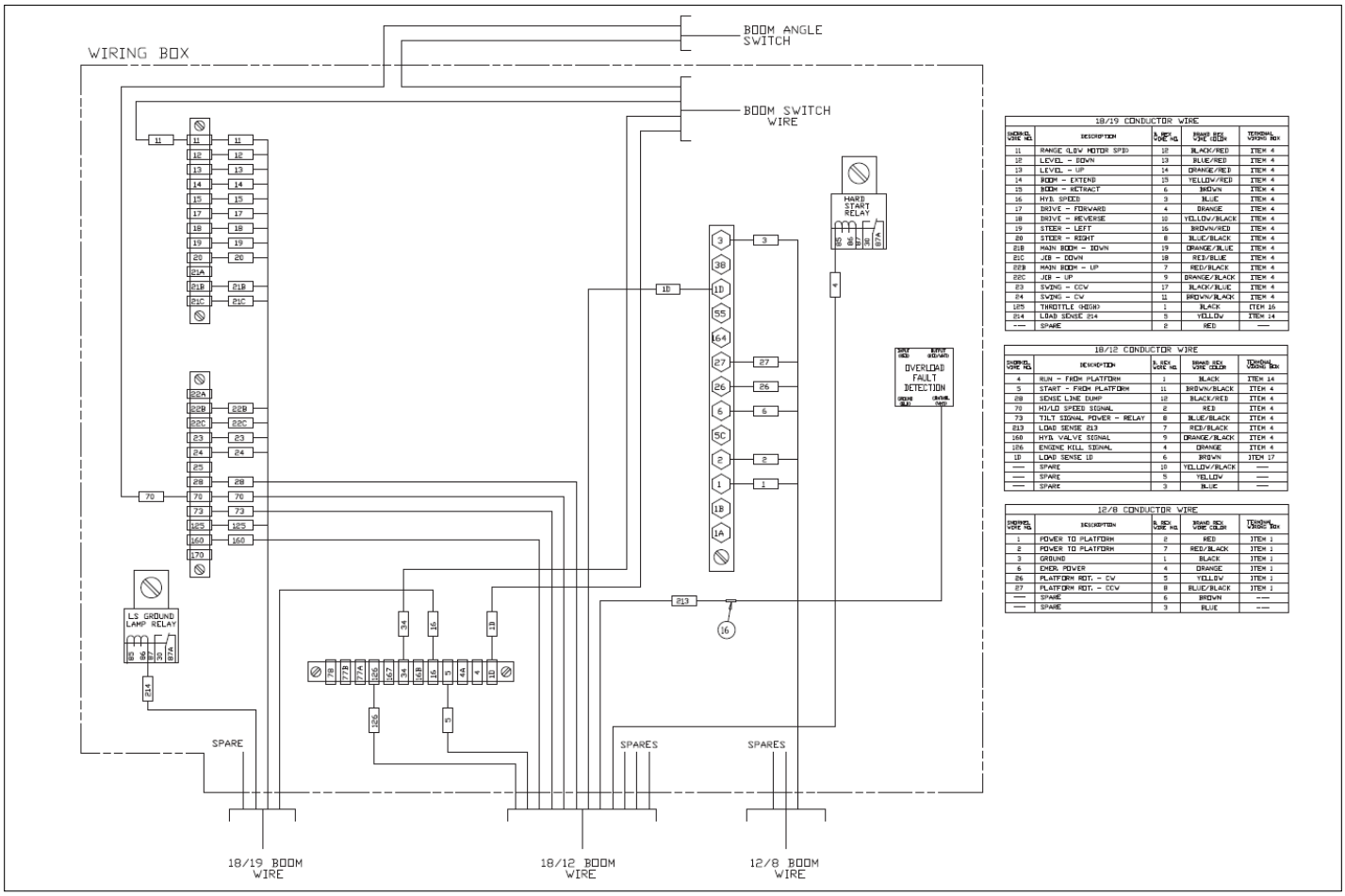

18/19 CONDUCTOR WIRE

CHASSIS WIRE NO.	DESCRIPTION	B. REV WIRE NO.	BRAND REV WIRE COLOR	TERMINAL STRIP NO.
11	RANGE (LOW MOTOR SPD)	12	BLACK/RED	ITEM 4
12	LEVEL – DOWN	13	BLUE/RED	ITEM 4
13	LEVEL – UP	14	ORANGE/RED	ITEM 4
14	BOOM – EXTEND	15	YELLOW/RED	ITEM 4
15	BOOM – RETRACT	6	BROWN	ITEM 4
16	HYD SPEED	3	BLUE	ITEM 4
17	DRIVE – FORWARD	4	ORANGE	ITEM 4
18	DRIVE – REVERSE	10	YELLOW/BLACK	ITEM 4
19	STEER – LEFT	16	BROWN/RED	ITEM 4
20	STEER – RIGHT	8	BLUE/BLACK	ITEM 4
21B	MAIN BOOM – DOWN	19	ORANGE/BLUE	ITEM 4
21C	JIB – DOWN	18	RED/BLUE	ITEM 4
22B	MAIN BOOM – UP	7	RED/BLACK	ITEM 4
22C	JIB – UP	9	ORANGE/BLACK	ITEM 4
23	SWING – CCW	17	BLACK/BLUE	ITEM 4
24	SWING – CW	11	BROWN/BLACK	ITEM 4
185	THROTTLE (HIGH)	1	BLACK	ITEM 16
214	LOAD SENSE 214	5	YELLOW	ITEM 14
----	SPARE	2	RED	----

18/12 CONDUCTOR WIRE

CHASSIS WIRE NO.	DESCRIPTION	B. REV WIRE NO.	BRAND REV WIRE COLOR	TERMINAL STRIP NO.
4	RUN – FROM PLATFORM	1	BLACK	ITEM 14
5	START – FROM PLATFORM	11	BROWN/BLACK	ITEM 4
28	SENSE LINE DUMP	12	BLACK/RED	ITEM 4
70	HI/LO SPEED SIGNAL	2	RED	ITEM 4
73	TILT SIGNAL POWER – RELAY	8	BLUE/BLACK	ITEM 4
213	LOAD SENSE 213	7	RED/BLACK	ITEM 4
160	HYD VALVE SIGNAL	9	ORANGE/BLACK	ITEM 4
186	ENGINE KILL SIGNAL	4	ORANGE	ITEM 4
18	LOAD SENSE 18	6	BROWN	ITEM 17
----	SPARE	10	YELLOW/BLACK	----
----	SPARE	5	YELLOW	----
----	SPARE	3	BLUE	----

12/8 CONDUCTOR WIRE

CHASSIS WIRE NO.	DESCRIPTION	B. REV WIRE NO.	BRAND REV WIRE COLOR	TERMINAL STRIP NO.
1	POWER TO PLATFORM	2	RED	ITEM 1
2	POWER TO PLATFORM	7	RED/BLACK	ITEM 1
3	GROUND	1	BLACK	ITEM 1
6	CHOK POWER	4	ORANGE	ITEM 1
86	PLATFORM RDT. – CW	5	YELLOW	ITEM 1
87	PLATFORM RDT. – CCW	8	BLUE/BLACK	ITEM 1
----	SPARE	6	BROWN	----
----	SPARE	3	BLUE	----

Courtesy of Crane.Market

Item	Part No.	Name	Qty	Uom
1	3044854	REPLACEMENT TERMINAL	1	EA
2	3044146	TERM R10I 22/18	1	EA
3	3044142	TERM R6I 22/18-PN18-6R-M	1	EA
4	3046972	REPLACEMENT TERMINAL	45	EA
5	0084774	PLATF CONTROL BOX ASSY TB66J KU CE	1	EA
6	PNNA	SEE CHART ON DIAGRAM	4	EA
7	PNNA	SEE CHART ON DIAGRAM	8	EA
8	PNNA	SEE CHART ON DIAGRAM	4	EA
9	5093004	CLAMP	1	EA
10	970029	CAPSCREW 1/4-20 X 3/4 INCH LONG HEX HEAD GRADE 5	1	EA
11	986019	WASHER FLAT .250	1	EA
12	987099	WASHER LOCK .250	1	EA
13	0071800	PLATFORM FOOT SWITCH	1	EA
14	3040047	TERM FEM250FI 22/18	5	EA
15	3044072	TERM BUTT CONN INSUL 12/10	1	EA
16	3044070	TERM BUTT 22/18	1	EA
17	3044146	TERM R10I 22/18	1	EA

Courtesy of Crane.Market

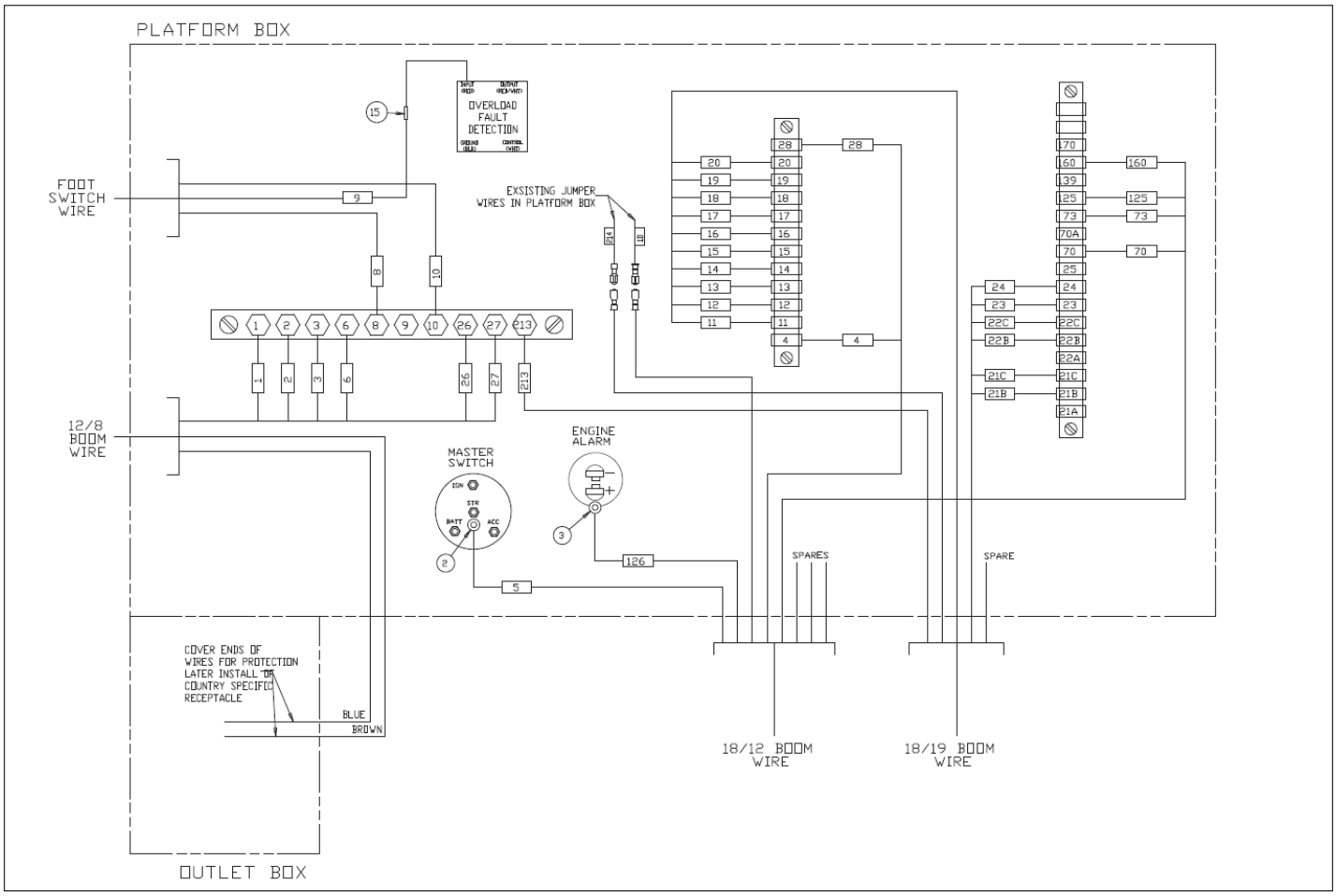

Courtesy of Crane.Market

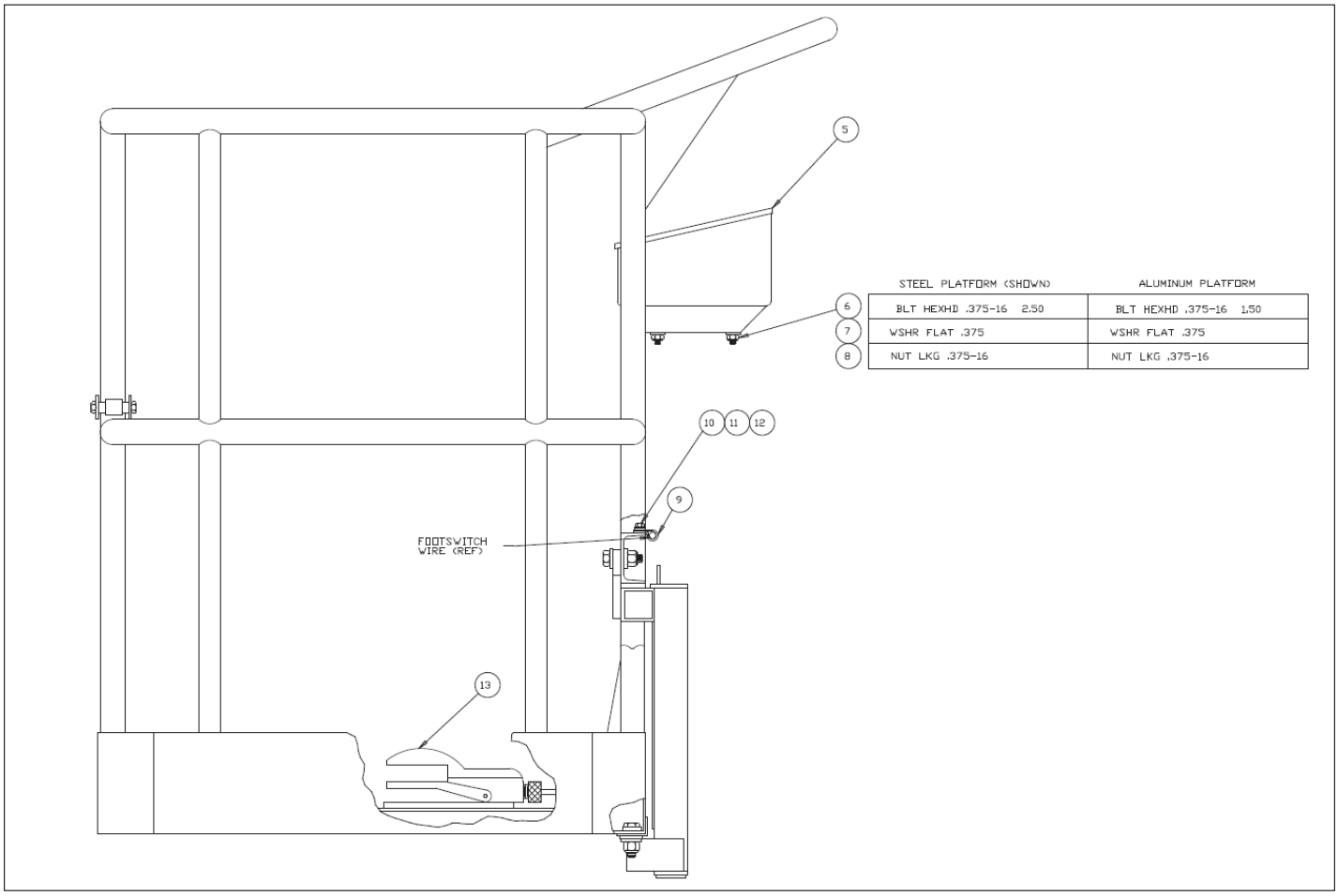

	STEEL PLATFORM (SHOWN)	ALUMINUM PLATFORM
6	BLT HEXHD .375-16 2.50	BLT HEXHD .375-16 1.50
7	WSHR FLAT .375	WSHR FLAT .375
8	NUT LKG .375-16	NUT LKG .375-16

Courtesy of Crane.Market

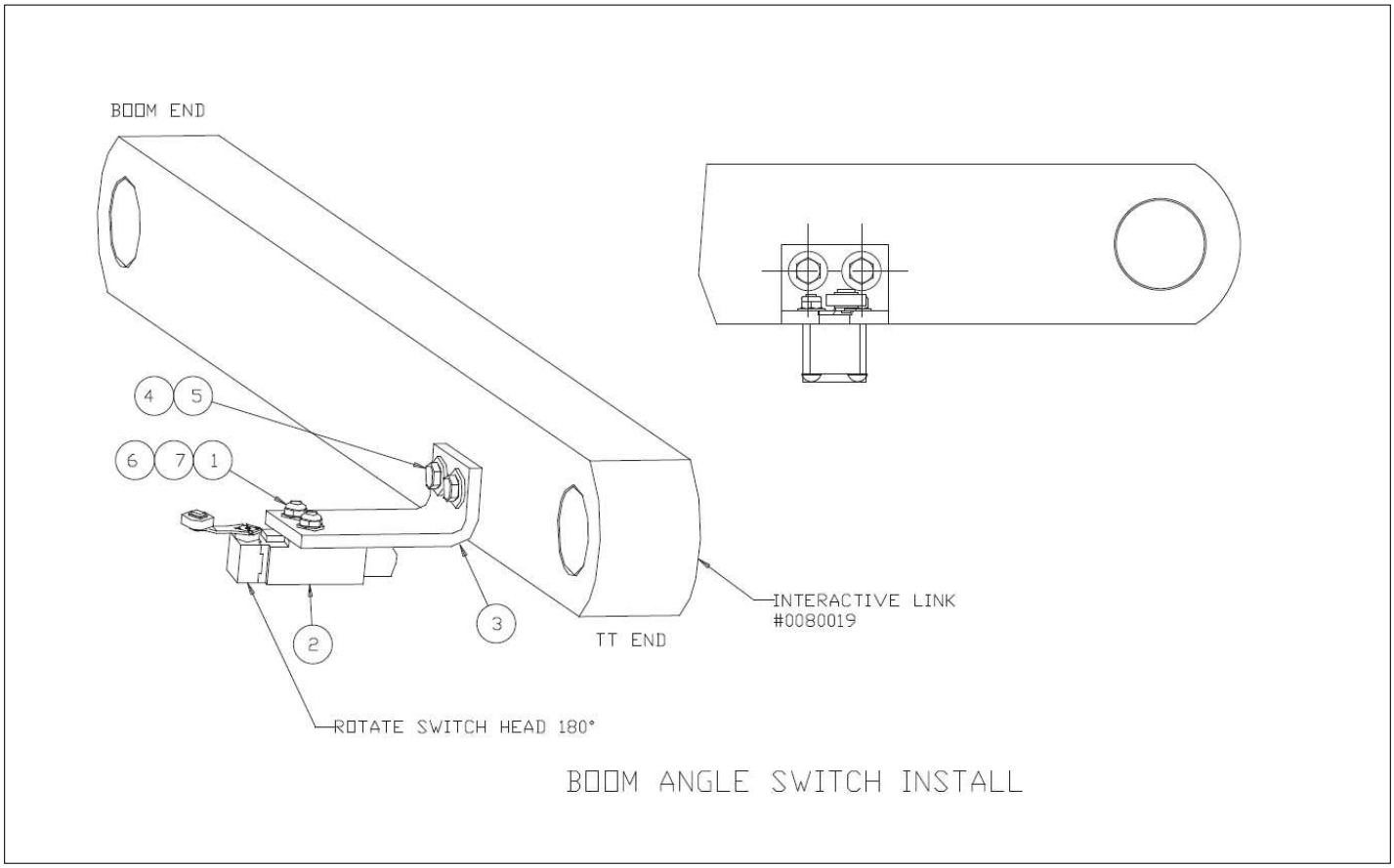

Courtesy of Crane.Market

ELECTRICAL

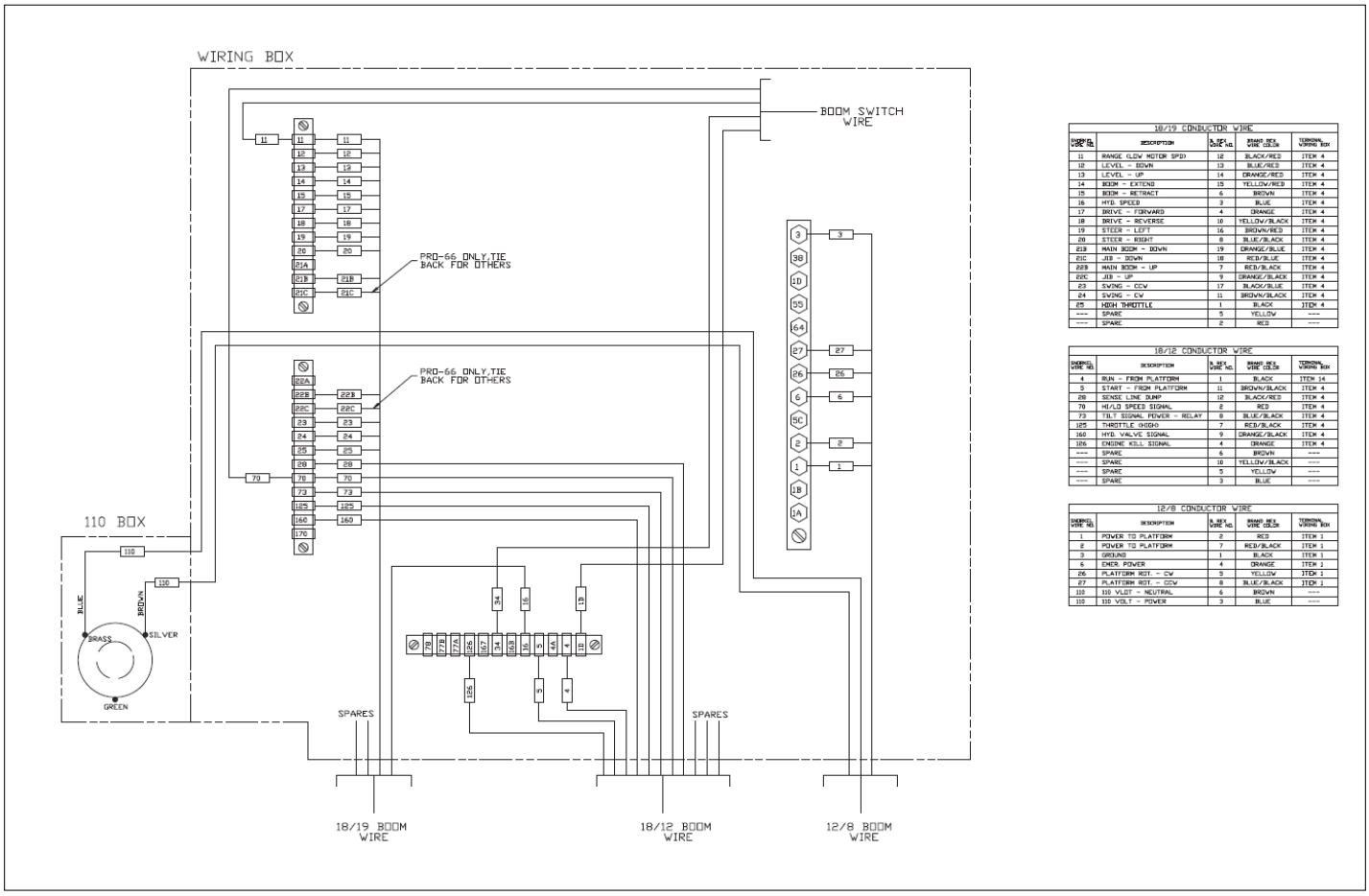

18/19 CONDUCTOR WIRE

ENGINEERING WIRE NO.	DESCRIPTION	S. DEX CABLE NO.	BRAND DEX WIRE COLOR	TERMINAL WIRING BOX
11	RANGE (LOW MOTOR SPD)	12	BLACK/RED	ITEM 4
12	LEVEL – DOWN	13	BLUE/RED	ITEM 4
13	LEVEL – UP	14	ORANGE/RED	ITEM 4
14	BOOM – EXTEND	15	YELLOW/RED	ITEM 4
15	BOOM – RETRACT	6	BROWN	ITEM 4
16	HYD. SPEED	3	BLUE	ITEM 4
17	DRIVE – FORWARD	4	ORANGE	ITEM 4
18	DRIVE – REVERSE	10	YELLOW/BLACK	ITEM 4
19	STEER – LEFT	16	BROWN/RED	ITEM 4
20	STEER – RIGHT	8	BLUE/BLACK	ITEM 4
21B	MAIN BOOM – DOWN	19	ORANGE/BLUE	ITEM 4
21C	JIB – DOWN	18	RED/BLUE	ITEM 4
22B	MAIN BOOM – UP	7	RED/BLACK	ITEM 4
22C	JIB – UP	9	ORANGE/BLACK	ITEM 4
23	SWING – CCW	17	BLACK/BLUE	ITEM 4
24	SWING – CW	11	BROWN/BLACK	ITEM 4
25	HIGH THROTTLE	1	BLACK	ITEM 4
----	SPARE	5	YELLOW	----
----	SPARE	2	RED	----

18/12 CONDUCTOR WIRE

ENGINEERING WIRE NO.	DESCRIPTION	S. DEX WIRE NO.	BRAND DEX WIRE COLOR	TERMINAL WIRING BOX
4	RUN – FROM PLATFORM	1	BLACK	ITEM 14
5	START – FROM PLATFORM	11	BROWN/BLACK	ITEM 4
28	SENSE LINE DUMP	12	BLACK/RED	ITEM 4
70	HI/LO SPEED SIGNAL	2	RED	ITEM 4
73	TILT SIGNAL POWER – RELAY	8	BLUE/BLACK	ITEM 4
125	THROTTLE (HIGH)	7	RED/BLACK	ITEM 4
160	HYD. VALVE SIGNAL	9	ORANGE/BLACK	ITEM 4
176	ENGINE KILL SIGNAL	4	ORANGE	ITEM 4
----	SPARE	6	BROWN	----
----	SPARE	10	YELLOW/BLACK	----
----	SPARE	5	YELLOW	----
----	SPARE	3	BLUE	----

12/8 CONDUCTOR WIRE

ENGINEERING WIRE NO.	DESCRIPTION	S. DEX WIRE NO.	BRAND DEX WIRE COLOR	TERMINAL WIRING BOX
1	POWER TO PLATFORM	2	RED	ITEM 1
2	POWER TO PLATFORM	7	RED/BLACK	ITEM 1
3	GROUND	1	BLACK	ITEM 1
6	EMER. POWER	4	ORANGE	ITEM 1
26	PLATFORM ROT. – CW	5	YELLOW	ITEM 1
27	PLATFORM ROT. – CCW	8	BLUE/BLACK	ITEM 1
110	110 VLOT – NEUTRAL	6	BROWN	----
115	110 VOLT – POWER	3	BLUE	----

Courtesy of Crane.Market

Item	Part No.	Name	Qty	Uom
1	3044854	REPLACEMENT TERMINAL	1	EA
2	3044146	TERM R10I 22/18	1	EA
3	3044142	TERM R6I 22/18-PN18-6R-M	1	EA
4	3046972	REPLACEMENT TERMINAL	45	EA
5	PNNW	REFER TO IMAGE	1	EA
6	PNNW	REFER TO IMAGE	4	EA
7	PNNW	REFER TO IMAGE	8	EA
8	PNNW	REFER TO IMAGE	4	EA
9	5093004	CLAMP	1	EA
10	970029	CAPSCREW 1/4-20 X 3/4 INCH LONG HEX HEAD GRADE 5	1	EA
11	986019	WASHER FLAT .250	1	EA
12	987099	WASHER LOCK .250	1	EA
13	0071800	PLATFORM FOOT SWITCH	1	EA
14	3040047	TERM FEM250FI 22/18	5	EA

Courtesy of Crane.Market

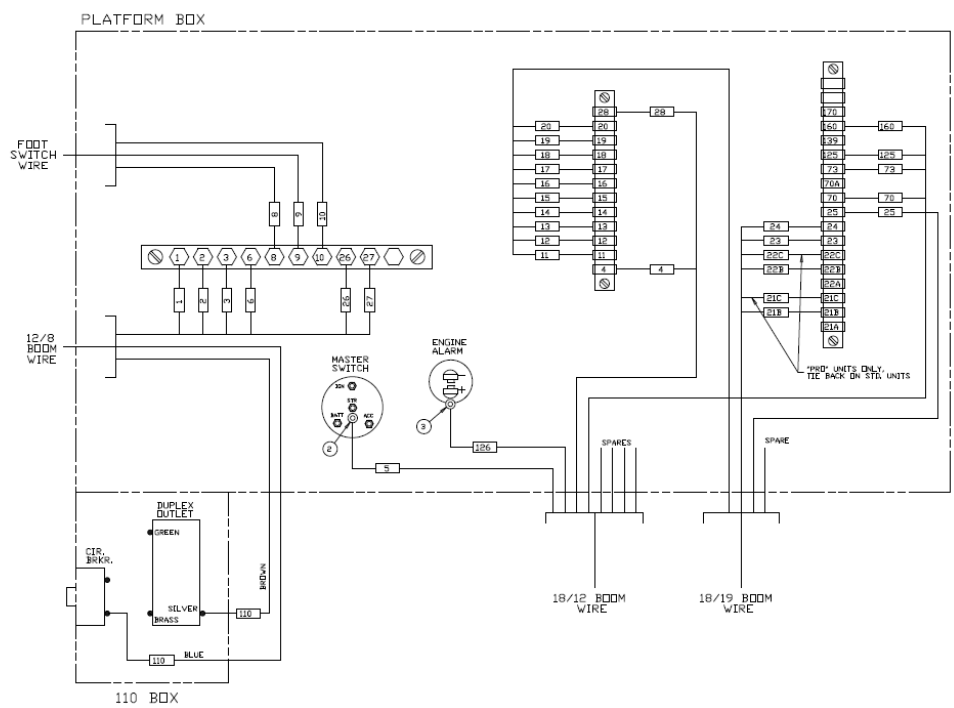

	18/19 CONDUCTOR WIRE				
	SHORNEL WIRE NO.	DESCRIPTION	B. BOX WIRE NO.	BRAND BOX WIRE COLOR	TERMINAL PLATFORM BOX
	11	RANGE (LOW MOTOR SPD)	12	BLACK/RED	ITEM 4
	12	LEVEL - DOWN	13	BLUE/RED	ITEM 4
	13	LEVEL - UP	14	ORANGE/RED	ITEM 4
	14	BOOM - EXTEND	15	YELLOW/RED	ITEM 4
	15	BOOM - RETRACT	6	BROWN	ITEM 4
	16	HYD. SPEED	3	BLUE	ITEM 4
	17	DRIVE - FORWARD	4	ORANGE	ITEM 4
	18	DRIVE - REVERSE	10	YELLOW/BLACK	ITEM 4
	19	STEER - LEFT	16	BROWN/RED	ITEM 4
	20	STEER - RIGHT	8	BLUE/BLACK	ITEM 4
	21B	MAIN BOOM - DOWN	19	ORANGE/BLUE	ITEM 4
(PRO-66 ONLY)	21C	JIB - DOWN	18	RED/BLUE	ITEM 4
	22B	MAIN BOOM - UP	7	RED/BLACK	ITEM 4
(PRO-66 ONLY)	22C	JIB - UP	9	ORANGE/BLACK	ITEM 4
	23	SWING - CCW	17	BLACK/BLUE	ITEM 4
	24	SWING - CW	11	BROWN/BLACK	ITEM 4
	25	HIGH THROTTLE	1	BLACK	
	---	SPARE	5	YELLOW	---
	---	SPARE	2	RED	---

18/12 CONDUCTOR WIRE				
SHORNEL WIRE NO.	DESCRIPTION	B. BOX WIRE NO.	BRAND BOX WIRE COLOR	TERMINAL PLATFORM BOX
4	RUN - FROM PLATFORM	1	BLACK	ITEM 4
5	START - FROM PLATFORM	11	BROWN/BLACK	ITEM 2
28	SENSE LINE DUMP	12	BLACK/RED	ITEM 4
70	HI/LO SPEED SIGNAL	2	RED	ITEM 4
73	TILT SIGNAL POWER - RELAY	8	BLUE/BLACK	ITEM 4
125	THROTTLE (HIGH)	7	RED/BLACK	ITEM 4
160	HYD. VALVE SIGNAL	9	ORANGE/BLACK	ITEM 4
126	ENGINE KILL SIGNAL	4	ORANGE	ITEM 3
---	SPARE	6	BROWN	---
---	SPARE	10	YELLOW/BLACK	---
---	SPARE	5	YELLOW	---
---	SPARE	3	BLUE	---

Courtesy of Crane.Market

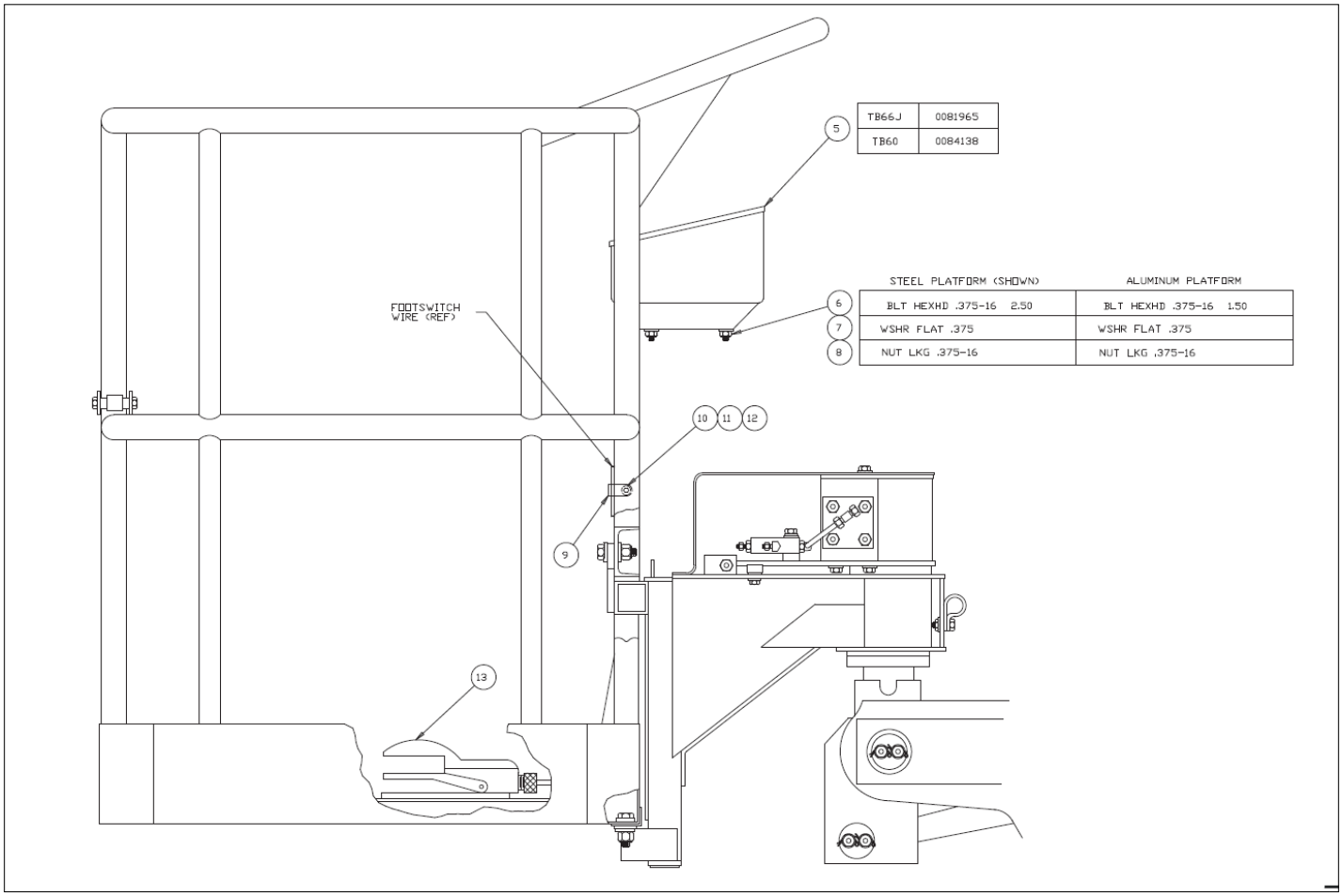

Courtesy of Crane.Market

ELECTRICAL

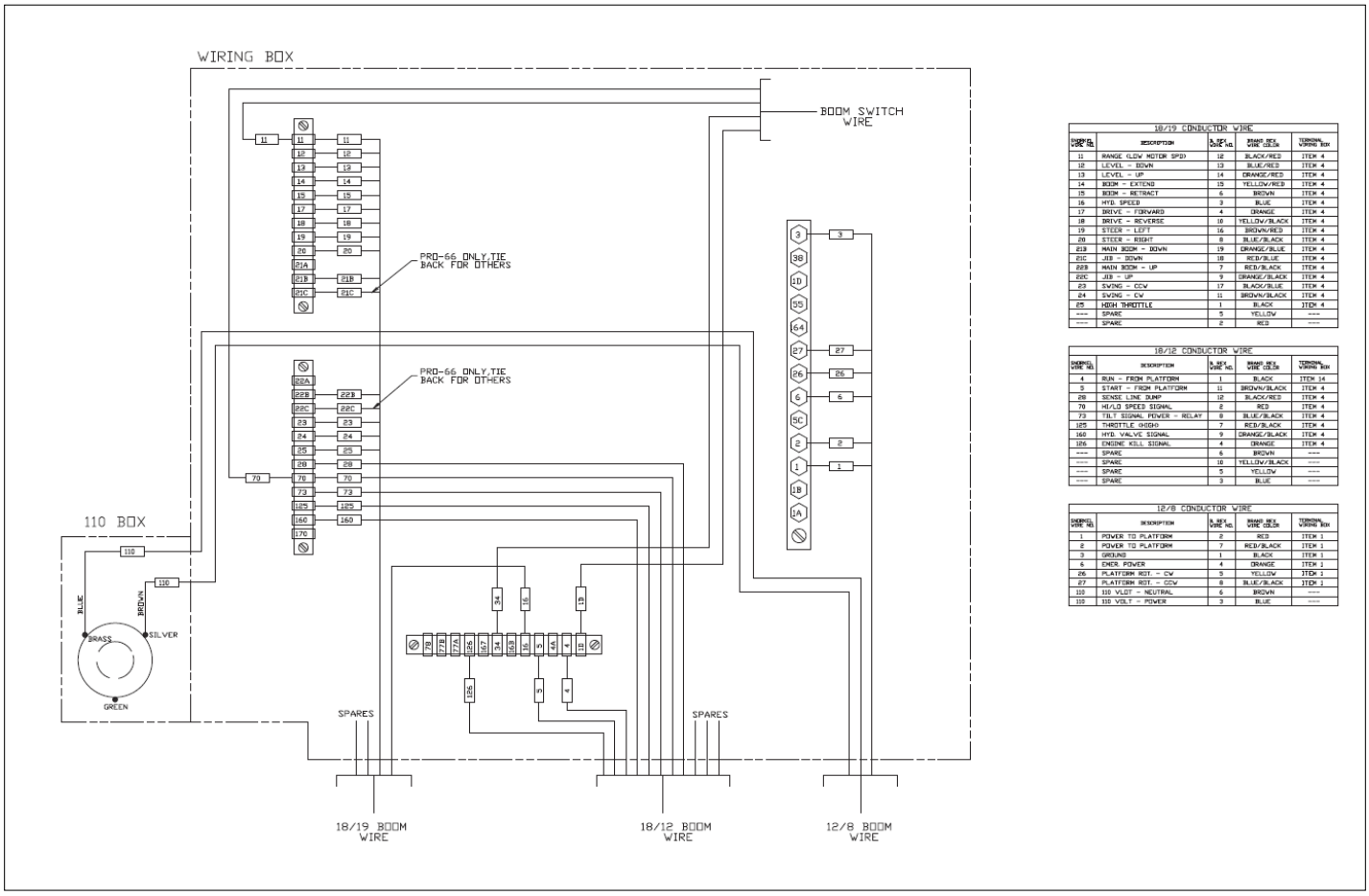

18/19 CONDUCTOR WIRE

ENGINEERING WIRE NO.	DESCRIPTION	S. DEX CABLE NO.	BRAND DEX WIRE COLOR	TERMINAL WIRING BOX
11	RANGE (LOW MOTOR SPD)	12	BLACK/RED	ITEM 4
12	LEVEL – DOWN	13	BLUE/RED	ITEM 4
13	LEVEL – UP	14	ORANGE/RED	ITEM 4
14	BOOM – EXTEND	15	YELLOW/RED	ITEM 4
15	BOOM – RETRACT	6	BROWN	ITEM 4
16	HYD. SPEED	3	BLUE	ITEM 4
17	DRIVE – FORWARD	4	ORANGE	ITEM 4
18	DRIVE – REVERSE	10	YELLOW/BLACK	ITEM 4
19	STEER – LEFT	16	BROWN/RED	ITEM 4
20	STEER – RIGHT	8	BLUE/BLACK	ITEM 4
21B	MAIN BOOM – DOWN	19	ORANGE/BLUE	ITEM 4
21C	JIB – DOWN	18	RED/BLUE	ITEM 4
22B	MAIN BOOM – UP	7	RED/BLACK	ITEM 4
22C	JIB – UP	9	ORANGE/BLACK	ITEM 4
23	SWING – CCW	17	BLACK/BLUE	ITEM 4
24	SWING – CW	11	BROWN/BLACK	ITEM 4
25	HIGH THROTTLE	1	BLACK	ITEM 4
----	SPARE	5	YELLOW	----
----	SPARE	2	RED	----

18/12 CONDUCTOR WIRE

ENGINEERING WIRE NO.	DESCRIPTION	S. DEX WIRE NO.	BRAND DEX WIRE COLOR	TERMINAL WIRING BOX
4	RUN – FROM PLATFORM	1	BLACK	ITEM 14
5	START – FROM PLATFORM	11	BROWN/BLACK	ITEM 4
28	SENSE LINE DUMP	12	BLACK/RED	ITEM 4
70	HI/LO SPEED SIGNAL	2	RED	ITEM 4
73	TILT SIGNAL POWER – RELAY	8	BLUE/BLACK	ITEM 4
125	THROTTLE (HIGH)	7	RED/BLACK	ITEM 4
160	HYD. VALVE SIGNAL	9	ORANGE/BLACK	ITEM 4
176	ENGINE KILL SIGNAL	4	ORANGE	ITEM 4
----	SPARE	6	BROWN	----
----	SPARE	10	YELLOW/BLACK	----
----	SPARE	5	YELLOW	----
----	SPARE	3	BLUE	----

12/8 CONDUCTOR WIRE

ENGINEERING WIRE NO.	DESCRIPTION	S. DEX WIRE NO.	BRAND DEX WIRE COLOR	TERMINAL WIRING BOX
1	POWER TO PLATFORM	2	RED	ITEM 1
2	POWER TO PLATFORM	7	RED/BLACK	ITEM 1
3	GROUND	1	BLACK	ITEM 1
6	EMER. POWER	4	ORANGE	ITEM 1
26	PLATFORM ROT. – CW	5	YELLOW	ITEM 1
27	PLATFORM ROT. – CCW	8	BLUE/BLACK	ITEM 1
110	110 VLOT – NEUTRAL	6	BROWN	----
115	110 VOLT – POWER	3	BLUE	----

Courtesy of Crane.Market

Item	Part No.	Name	Qty	Uom
1	3044854	REPLACEMENT TERMINAL	1	EA
2	3044146	TERM R10I 22/18	1	EA
3	3044142	TERM R6I 22/18-PN18-6R-M	1	EA
4	3046972	REPLACEMENT TERMINAL	45	EA
5	PNNA	PLATFORM CONTROL BOX SUBASSY	1	EA
6	PNNA	REFER TO CHART	4	EA
7	PNNA	REFER TO CHART	8	EA
8	PNNA	REFER TO CHART	4	EA
9	5093004	CLAMP	1	EA
10	970029	CAPSCREW 1/4-20 X 3/4 INCH LONG HEX HEAD GRADE 5	1	EA
11	986019	WASHER FLAT .250	1	EA
12	987099	WASHER LOCK .250	1	EA
13	0071800	PLATFORM FOOT SWITCH	1	EA
14	3040047	TERM FEM250FI 22/18	5	EA

Courtesy of Crane.Market

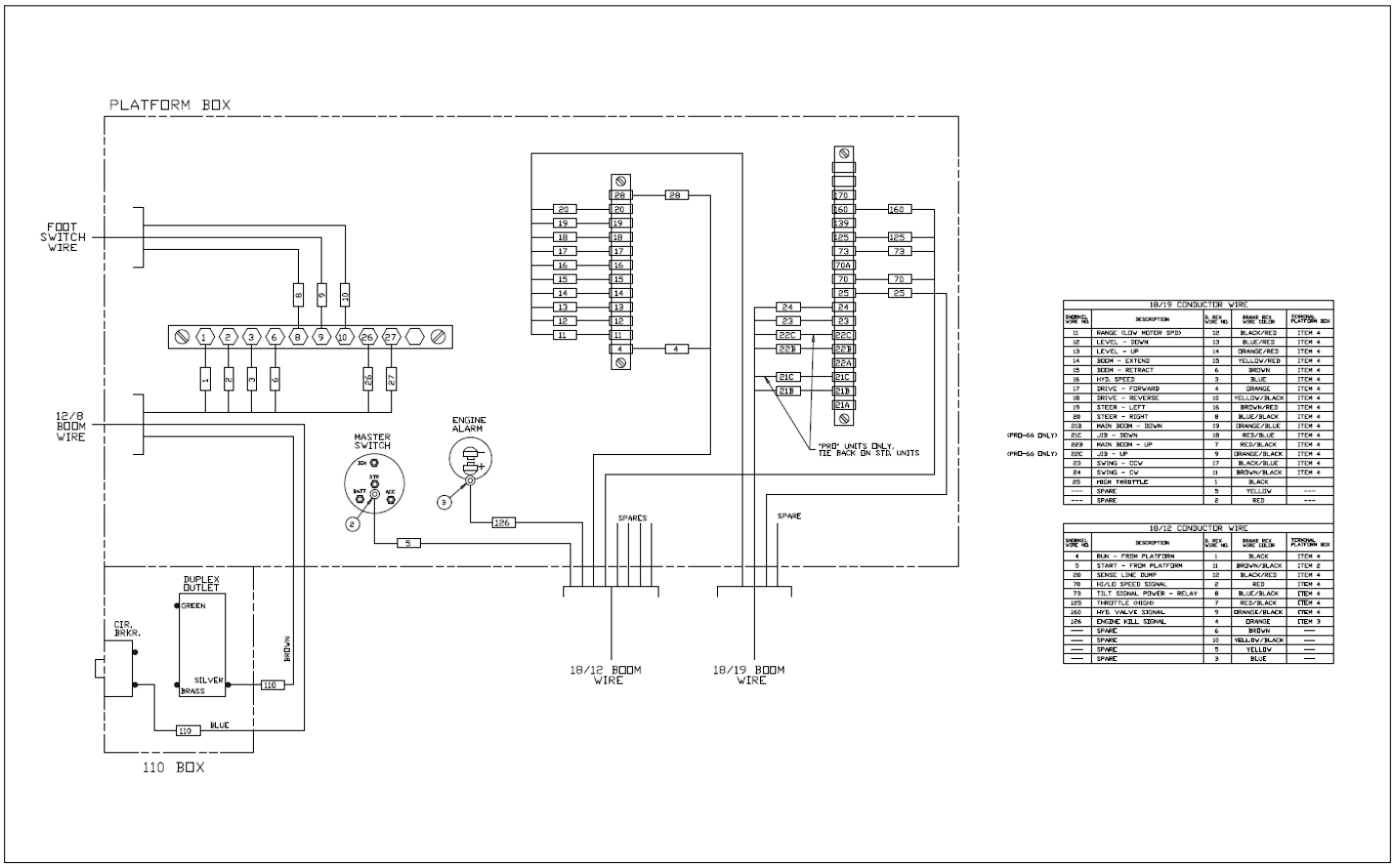

18/19 CONDUCTOR WIRE

	DESCRIPTION	5 PIN CABLE NO.	BRAND RCT WIRE COLOR	TERMINAL PLATFORM BOX
11	RANGE (LOW MOTOR SPD)	12	BLACK/RED	ITEM 4
12	LEVEL - DOWN	13	BLUE/RED	ITEM 4
13	LEVEL - UP	14	ORANGE/RED	ITEM 4
14	BOOM - EXTEND	15	YELLOW/RED	ITEM 4
15	BOOM - RETRACT	6	BROWN	ITEM 4
16	HYD. SPEED	3	BLUE	ITEM 4
17	DRIVE - FORWARD	4	ORANGE	ITEM 4
18	DRIVE - REVERSE	10	YELLOW/BLACK	ITEM 4
19	STEER - LEFT	16	BROWN/RED	ITEM 4
20	STEER - RIGHT	8	BLUE/BLACK	ITEM 4
21B	MAIN BOOM - DOWN	19	ORANGE/BLUE	ITEM 4
21C (PRO-66 ONLY)	JIB - DOWN	18	RED/BLUE	ITEM 4
22B	MAIN BOOM - UP	7	RED/BLACK	ITEM 4
22C (PRO-66 ONLY)	JIB - UP	9	ORANGE/BLACK	ITEM 4
23	SWING - CCW	17	BLACK/BLUE	ITEM 4
24	SWING - CW	11	BROWN/BLACK	ITEM 4
25	HIGH THROTTLE	1	BLACK	
----	SPARE	5	YELLOW	----
---	SPARE	2	RED	---

18/12 CONDUCTOR WIRE

CHERRY WIRE NO.	DESCRIPTION	5 PIN CABLE NO.	BRAND RCT WIRE COLOR	TERMINAL PLATFORM BOX
4	RUN - FROM PLATFORM	1	BLACK	ITEM 4
5	START - FROM PLATFORM	11	BROWN/BLACK	ITEM 2
28	SENSE LINE DUMP	12	BLACK/RED	ITEM 4
70	HI/LO SPEED SIGNAL	2	RED	ITEM 4
73	TILT SIGNAL POWER - RELAY	8	BLUE/BLACK	ITEM 4
125	THROTTLE (HIGH)	7	RED/BLACK	ITEM 4
160	HYD. VALVE SIGNAL	9	ORANGE/BLACK	ITEM 4
126	ENGINE KILL SIGNAL	4	ORANGE	ITEM 3
----	SPARE	6	BROWN	----
----	SPARE	10	YELLOW/BLACK	----
----	SPARE	5	YELLOW	----
----	SPARE	3	BLUE	----

Courtesy of Crane.Market

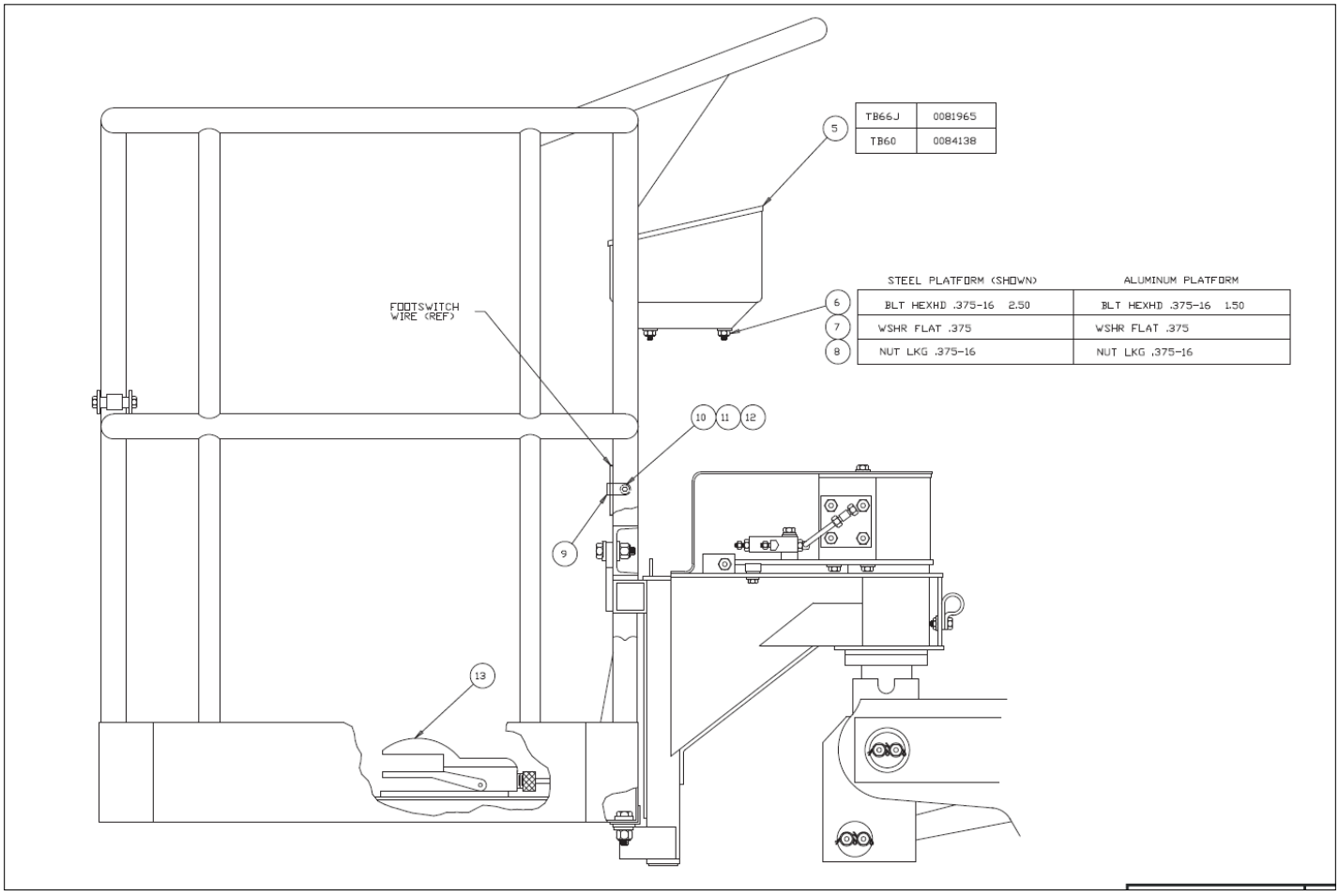

Courtesy of Crane.Market

ELECTRICAL

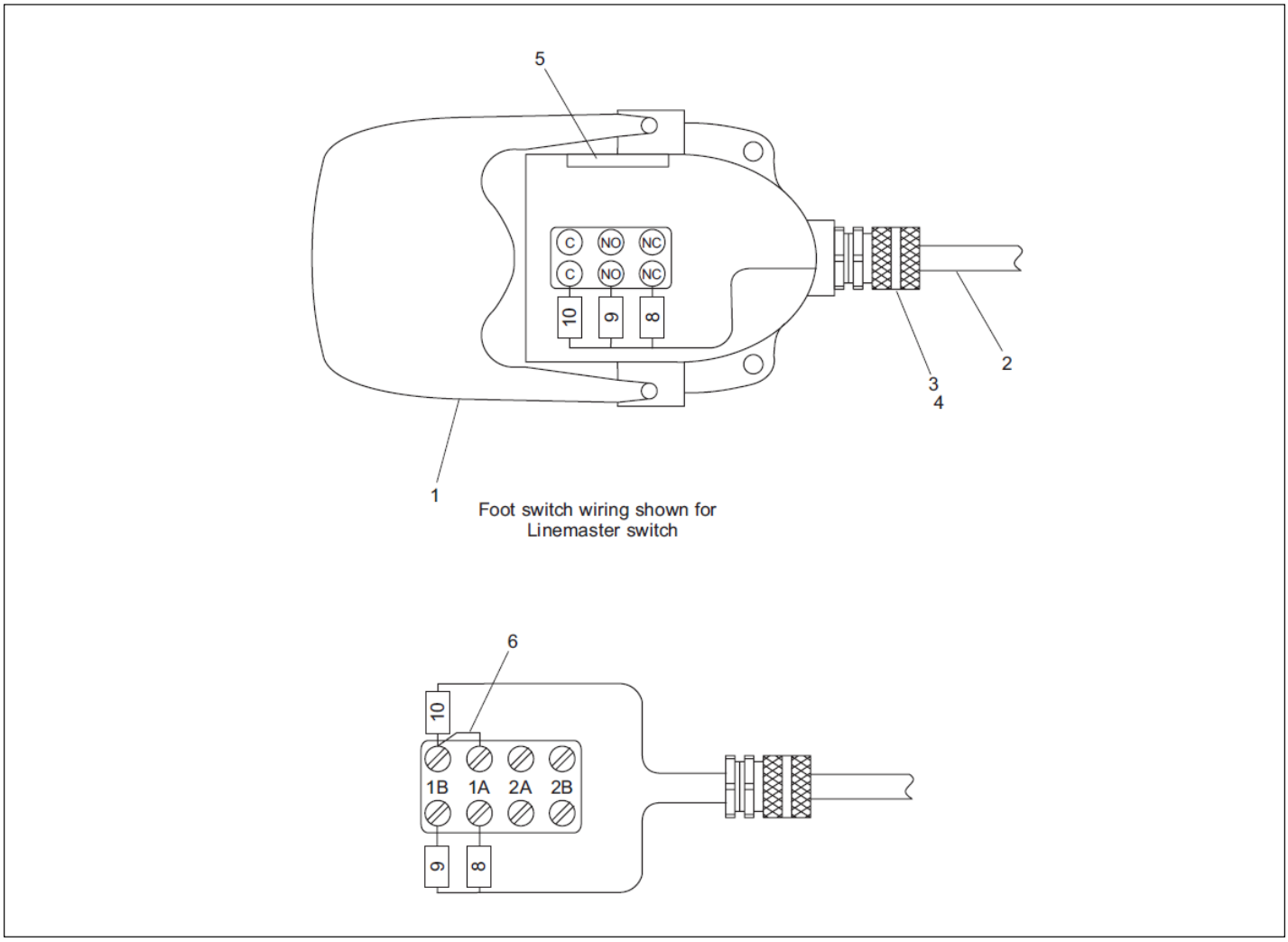

Courtesy of Crane.Market

Item	Part No.	Name	Qty	Uom
1	3020021	FOOT SWITCH	1	EA
Not Shown	3020037	REPLACEMNET SWITCH, SQUARE D SWITCH	1	EA
Not Shown	3020038	REPLACEMENT SWITCH, LINEMASTER	1	EA
2	0070596	WIRE HARNESS, PLATFORM FOOT SWITCH	1	EA
3	3040116	CONN .75 .500-.625	1	EA
4	3040110	NUT LKG HUB .750 SAMEAS 962129	1	EA
5	0070967	CORROSION INHIBITOR STICK-BACK	1	EA
6	0060373	JUMPER, SWITCH TERMINAL STRAP	1	EA

Courtesy of Crane.Market

ELECTRICAL

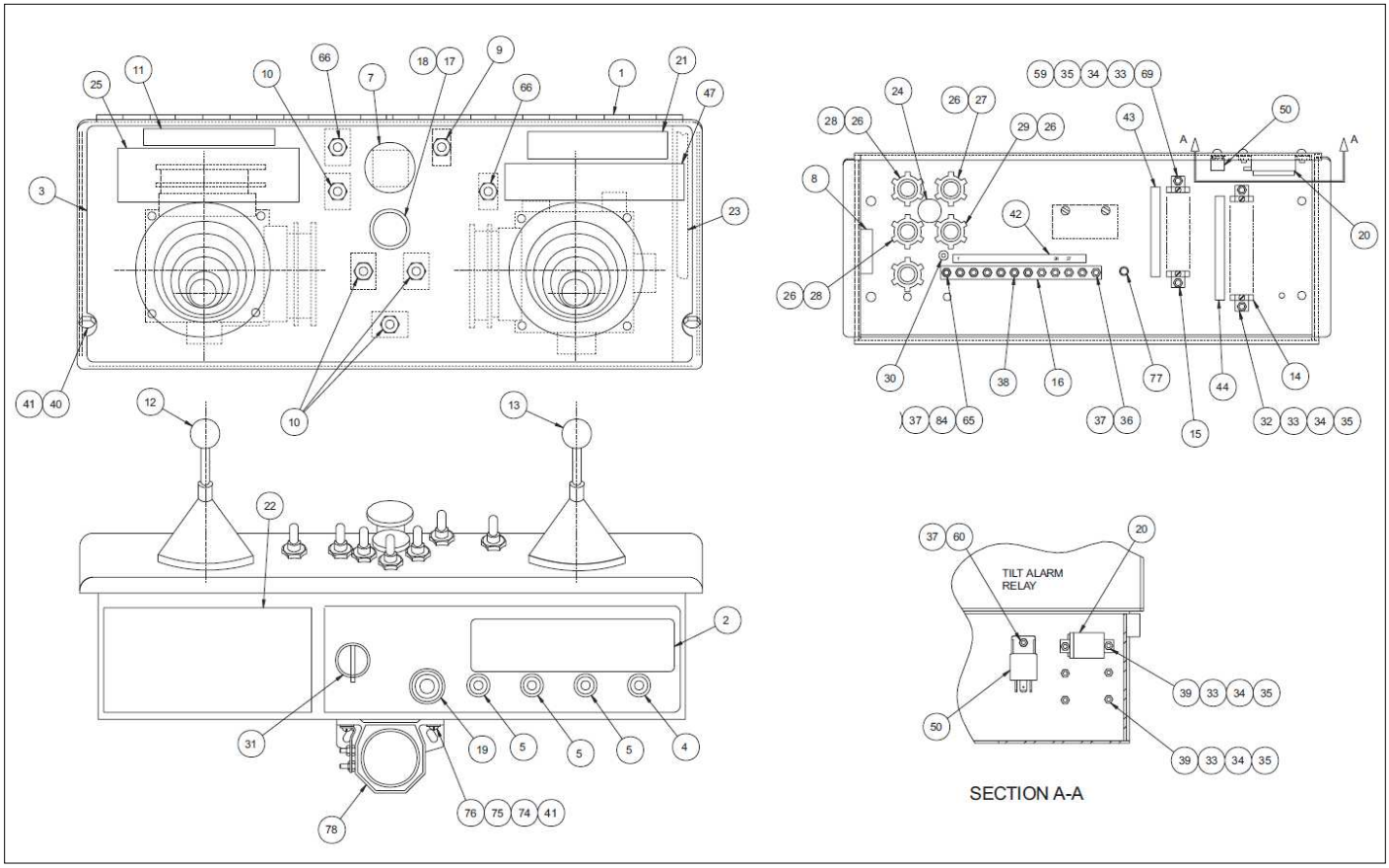

Courtesy of Crane.Market

Item	Part No.	Name	Qty	Uom
1	0180842	CONTROL BOX	1	EA
2	0180846	PLACARD PLATFORM CONTROL BOX FRONT	1	EA
3	0081979	PLAC PLATF CONT BOX TOP	1	EA
4	3040068	CIRCUIT BREAKER 20 AMP	1	EA
5	3040535	CIRCUIT BREAKER 3AMP	3	EA
6	0073295	WIRE 16 R6I FEM250FI 8	1	EA
7	3020020	SWITCH EMERGENCY STOP PUSH/PULL	1	EA
Not Shown	3040194	REPLACEMENT SWITCH KNOB	1	EA
8	0070967	CORROSION INHIBITOR STICK-BACK	1	EA
9	3020080	SWITCH TOGGLE SPDT MOM/ON	1	EA
10	3020018	SWITCH TOGGLE DPDT (ON) OFF (ON)	4	EA
11	0073668	DECAL CAUTN DO NOT USE BOOM (DECAL LISTED IN BOM NOT ID WITH DWG REV N 0180948)	1	EA
12	3040493	CONTROLLER 33HZ LIFT/SWING	1	EA
13	3040492	CONTROLLER 33HZ DRIVE/STEER	1	EA
14	3040057	TERMINAL STRIP 18 CIRCUIT	1	EA
15	3040433	TERMINAL STRIP (12) .188 TAB	1	EA
16	3044710	TERM STRIP (10) #10 STUD	1	EA
17	0180949	RHEOSTAT	1	EA
Not Shown	3040497	REPLACEMENT SWITCH	1	EA
18	3040348	KNOB RHEOSTAT	1	EA
19	3040411	ALARM MINI SIREN 6-28VDC-	1	EA
20	3040188	RELAY SPDT 12V 30AMP SONG	1	EA
21	0181654	DECAL DNGR INSPECT UNIT	1	EA

Courtesy of Crane.Market

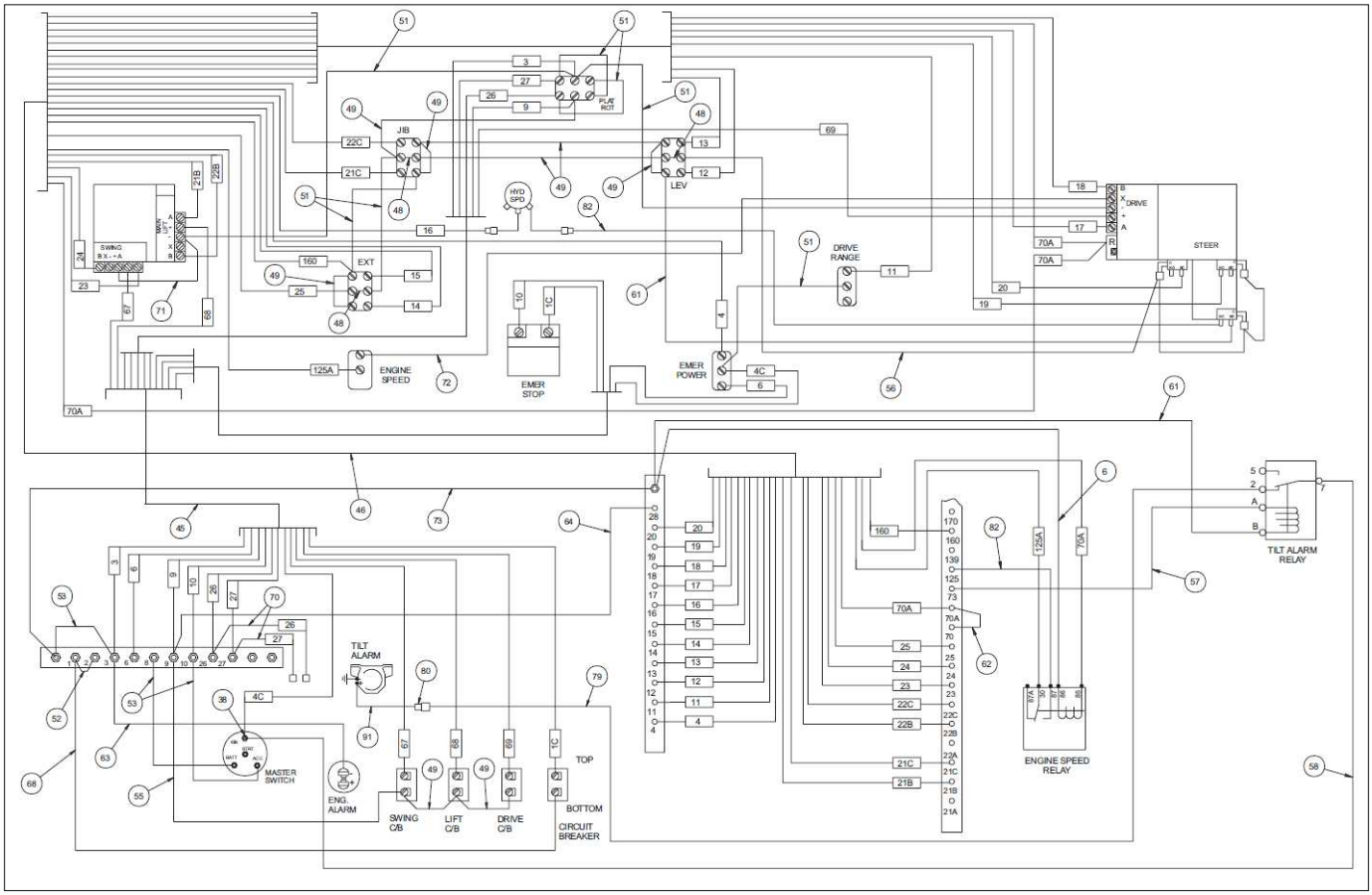

Courtesy of Crane.Market

Item	Part No.	Name	Qty	Uom
22	0072530	DECAL DNGR ELEC HAZARD	1	EA
23	7190001	GASKET	1	EA
24	3040031	PLUG HOLE .750	1	EA
25	0072541	DECAL DANGER DO NOT OPERATE (DECAL LISTED IN BOM NOT ID WITH DWG REV N 0180948)	1	EA
26	3040110	NUT LKG HUB .750 SAMEAS 962129	5	EA
27	3040285	CONN .75 .375-.500	1	EA
28	3040116	CONN .75 .500-.625	3	EA
29	3040295	CONN .75 .625-.75	1	EA
30	5569003	GROMMET .188 ID .438OD .125-AN9	1	EA
31	3020090	SW ANTI-RESTART IGNITION-	1	EA
32	974279	SCR RDH 6-32 .750	3	EA
33	987349	WSHR LOCK 6	10	EA
34	986159	WSHR FLAT 6	10	EA
35	984009	NUT #6-32 HEX	10	EA
36	5560648	SCR RDHD 10-24 .750	1	EA
37	5560034	NUT HEX LKG 10-24	3	EA
38	5560038	NUT #10-32 ESNA	14	EA
39	974239	SCREW RHD #6-32 .50	6	EA
40	970049	BOLT HEXHD .250-20 1.00 GR. 5	2	EA
41	5560004	NUT HEXHD .250-20 LKG	4	EA
42	0180886	DECAL TERM STRIP HORIZ 10TERM	1	EA
43	0180887	DECAL TERM STRIP HORIZ 13TERM	1	EA
44	0180888	DECAL TERM STRIP HORIZ 16TERM	1	EA
45	0180850	WIRE ASSY PLAT CONT BOX	1	EA

Courtesy of Crane.Market

Item	Part No.	Name	Qty	Uom
46	0082007	WIRE ASSEMBLY - CONTROL	1	EA
47	0181655	DECAL CAUTN MOVE CONT HDL SLOW	1	EA
48	0060373	JUMPER, SWITCH TERMINAL STRAP	3	EA
49	0070747	WIRE 16 R61 R61 3	8	EA
50	3040469	RELAY SPDT 12V 30AMP SONG	1	EA
51	0070730	WIRE 16 R61 R61 5.5	7	EA
52	0070711	WIRE 12 R10I R10I 3	1	EA
53	0070712	WIRE 12 R10I R10I 5	3	EA
54	0071557	WIRE 18 R8I MALE250FI 7	1	EA
55	0240483	WIRE 16 R61 R101 8	1	EA
56	0181074	WIRE 18	1	EA
57	0071511	WIRE 18 FEM188I FEM188I 11	1	EA
58	0071534	WIRE 18 R10I FEM188I 21	1	EA
59	5560663	WSHR STAR 6 EXTERNAL TOOTH	1	EA
60	5560609	SCR TRHD 10-24 .50	1	EA
61	0181028	WIRE 16 R6 FEM188 10.5	2	EA
62	0110468	WIRE 16 FEM188I FEM188I 4	1	EA
63	0151816	WIRE 16 R10I R10I 7.5	1	EA
64	0070713	WIRE 18 R10I FEM188I 10	1	EA
65	5560649	M.SCREW, #10-24 X 1" LG. TRUSS HEAD	1	EA
66	3020013	SWITCH TOGGLE SPST ON OFF SEALED	2	EA
67	986009	FLAT WASHER #10	2	EA
68	0181029	WIRE 12 R6 R10 19.5	1	EA
69	974269	SCR RDH 6-32 1.00	1	EA
70	0181031	WIRE 12 R10 FEM250FI 11	2	EA
71	0070746	WIRE 16 R61 R61 9	1	EA
72	0070753	WIRE 16 R61 R61 12	1	EA

Courtesy of Crane.Market

Item	Part No.	Name	Qty	Uom
73	0151910	WIRE 16 R6 R10 14	1	EA
74	5560341	WASHER STAR .250	1	EA
75	986019	WASHER FLAT .250	2	EA
76	970029	CAPSCREW 1/4-20 X 3/4 INCH LONG HEX HEAD GRADE 5	2	EA
77	5569711	GROMMET .438ID .688DIAX.125GRV	1	EA
78	480652	ALARM97DBA DUAL TONE 12/24V	1	EA
79	0181030	WIRE 16 FEM188 FEM250FI 15	1	EA
80	3040046	TERM, .250 MALE SLIP-ON F.I. 22/18 WIRE	1	EA
81	3044161	TERM R10I 16/14	1	EA
82	0090622	WIRE 18 FEM188I FEM250I 9	2	EA
83	5560654	WASHER LOCK #10	3	EA

Courtesy of Crane.Market

ELECTRICAL

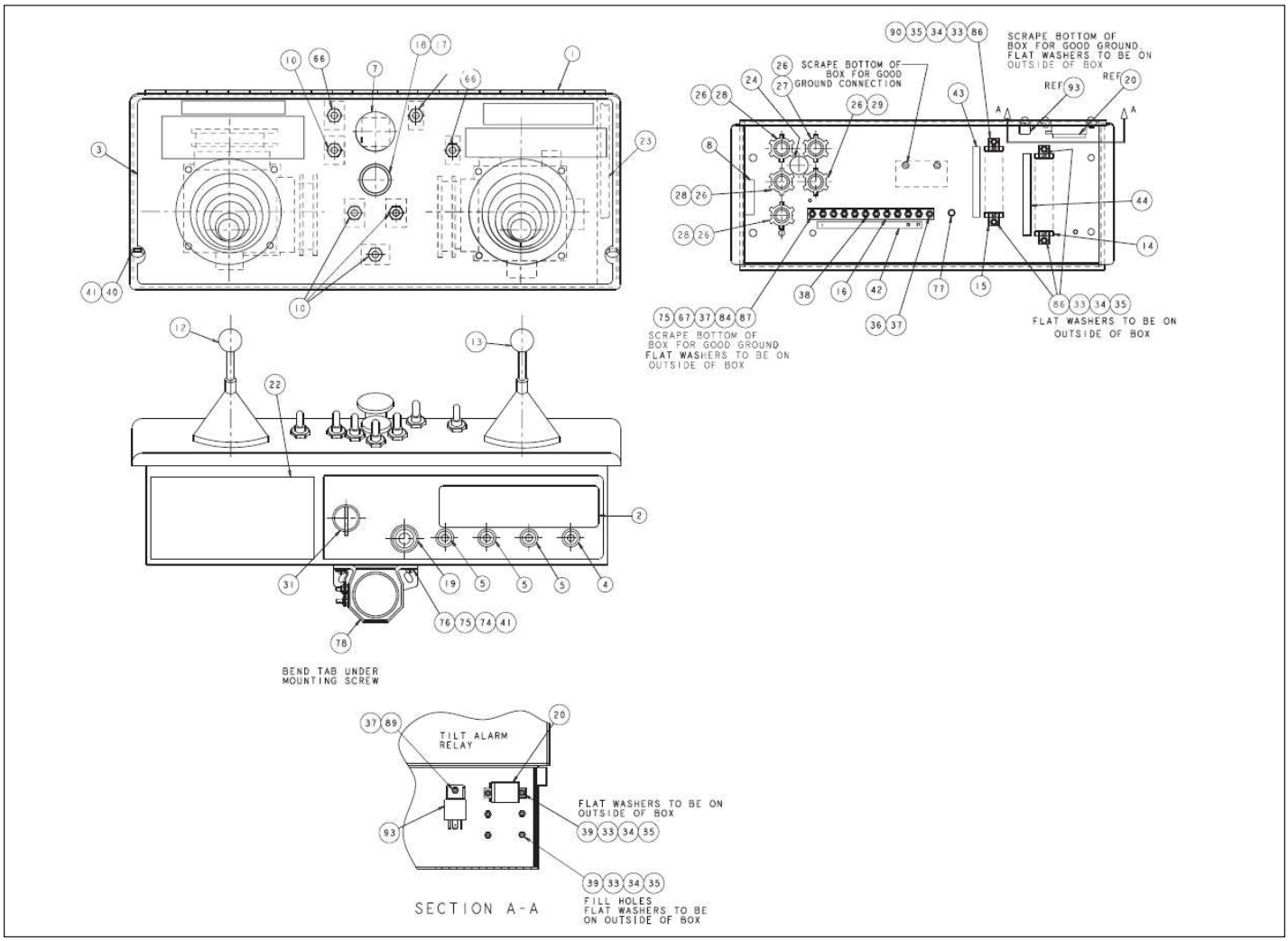

Courtesy of Crane.Market

Item	Part No.	Name	Qty	Uom
1	0180842	CONTROL BOX	1	EA
2	0180846	PLACARD PLATFORM CONTROL BOX FRONT	1	EA
3	0081979	PLAC PLATF CONT BOX TOP	1	EA
4	3040068	CIRCUIT BREAKER 20 AMP	1	EA
5	3040535	CIRCUIT BREAKER 3AMP	3	EA
6	0073295	WIRE 16 R6I FEM250FI 8	1	EA
7	3020020	SWITCH EMERGENCY STOP PUSH/PULL	1	EA
8	0070967	CORROSION INHIBITOR STICK-BACK	1	EA
9	3020080	SWITCH TOGGLE SPDT MOM/ON	1	EA
10	3020018	SWITCH TOGGLE DPDT (ON) OFF (ON)	4	EA
12	3040493	CONTROLLER 33HZ LIFT/SWING	1	EA
13	3040492	CONTROLLER 33HZ DRIVE/STEER	1	EA
14	3040057	TERMINAL STRIP 18 CIRCUIT	1	EA
15	3040433	TERMINAL STRIP (12) .188 TAB	1	EA
16	3044710	TERM STRIP (10) #10 STUD	1	EA
17	0180949	RHEOSTAT	1	EA
18	3040348	KNOB RHEOSTAT	1	EA
19	3040411	ALARM MINI SIREN 6-28VDC-	1	EA
20	3040188	RELAY SPDT 12V 30AMP SONG	1	EA
21	PNNA	DECAL DNGR INSPECT UNIT	1	EA
22	0072530	DECAL DNGR ELEC HAZARD	1	EA
23	7190001	GASKET	72 IN	EA
24	3040031	PLUG HOLE .750	1	EA
26	3040110	NUT LKG HUB .750 SAMEAS 962129	5	EA
27	3040285	CONN .75 .375-.500	1	EA

Courtesy of Crane.Market

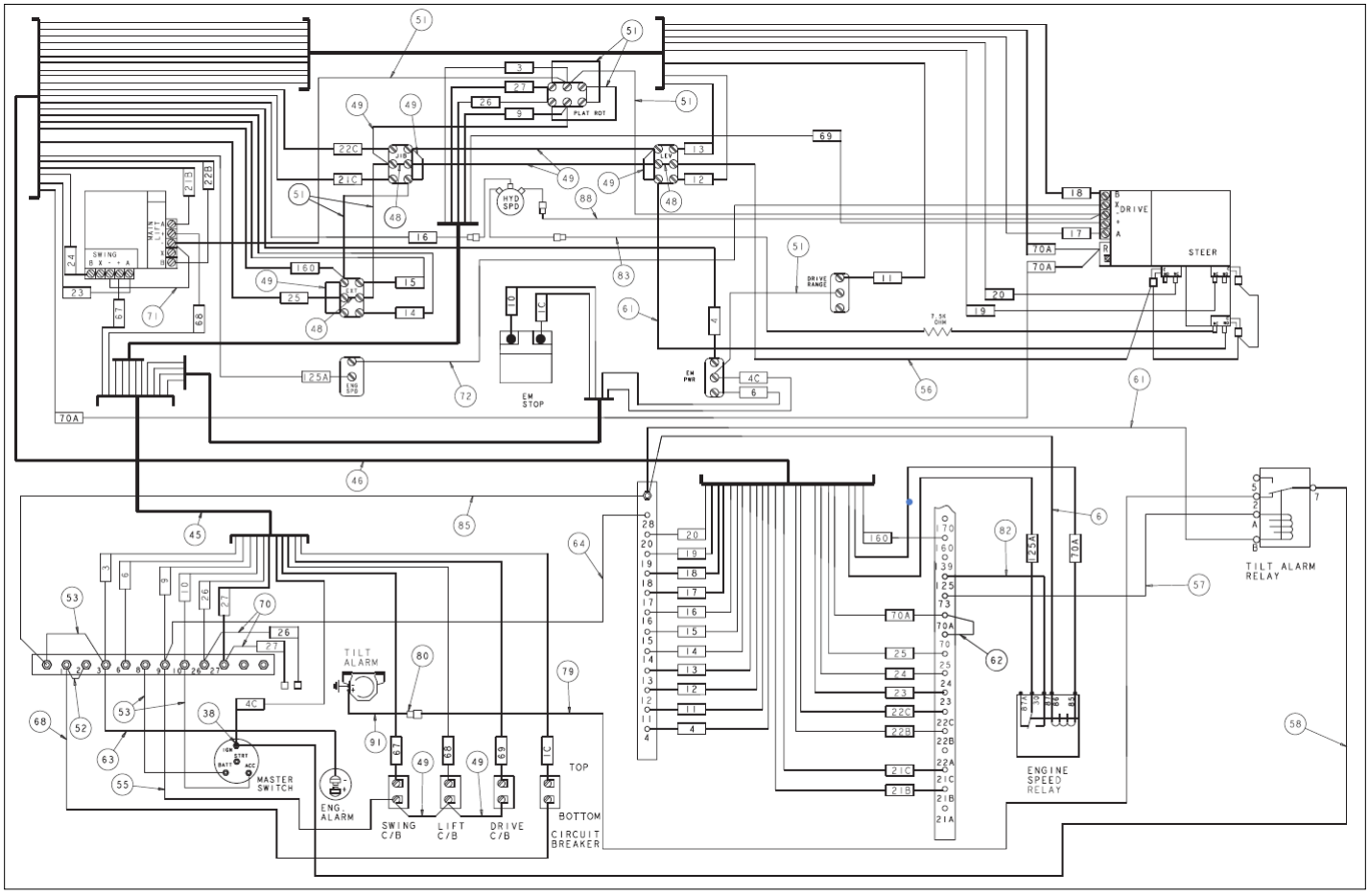

Courtesy of Crane.Market

Item	Part No.	Name	Qty	Uom
28	3040116	CONN .75 .500-.625	3	EA
29	3040295	CONN .75 .625-.75	1	EA
31	3020090	SW ANTI-RESTART IGNITION-	1	EA
33	PNNA	WASHER LOCK #6	10	EA
34	PNNA	WASHER FLAT #6	10	EA
35	PNNA	NUT HEX 6-32	10	EA
36	PNNA	SCR TRHD 10-24 .75 GR5	1	EA
37	PNNA	NUT LKG 10-24	3	EA
38	PNNA	NUT LKG 10-32	14	EA
39	PNNA	SCR RHD 6-32 .50 GR5	6	EA
40	PNNA	BLT HEXHD .250-20 1.00 GR5 SEMS	2	EA
41	PNNA	NUT LKG .250-20	4	EA
42	0180886	DECAL TERM STRIP HORIZ 10TERM	1	EA
43	0180887	DECAL TERM STRIP HORIZ 13TERM	1	EA
44	0180888	DECAL TERM STRIP HORIZ 16TERM	1	EA
45	0180850	WIRE ASSY PLAT CONT BOX	1	EA
46	0082007	WIRE ASSEMBLY - CONTROL	1	EA
48	0060373	JUMPER, SWITCH TERMINAL STRAP	3	EA
49	0070747	WIRE 16 R61 R61 3	8	EA
51	0070730	WIRE 16 R61 R61 5.5	7	EA
52	0070711	WIRE 12 R10I R10I 3	1	EA
53	0070712	WIRE 12 R10I R10I 5	3	EA
55	0240483	WIRE 16 R61 R101 8	1	EA
56	0181074	WIRE 18	1	EA
57	0071511	WIRE 18 FEM188I FEM188I 11	1	EA
58	0071534	WIRE 18 R10I FEM188I 21	1	EA
61	0181028	WIRE 16 R6 FEM188 10.5	2	EA

Courtesy of Crane.Market

Item	Part No.	Name	Qty	Uom
62	0110468	WIRE 16 FEM188I FEM188I 4	1	EA
63	0151816	WIRE 16 R10I R10I 7.5	1	EA
64	0070713	WIRE 18 R10I FEM188I 10	1	EA
66	3020013	SWITCH TOGGLE SPST ON OFF SEALED	2	EA
67	PNNA	WASHER FLAT #10	2	EA
68	0181029	WIRE 12 R6 R10 19.5	1	EA
70	0181031	WIRE 12 R10 FEM250FI 11	2	EA
71	0070746	WIRE 16 R61 R61 9	1	EA
75	PNNA	WASHER FLAT .250	2	EA
76	PNNA	BLT HEXHD .250-20 .75 GR5	2	EA
77	5569711	GROMMET .438ID .688DIAX.125GRV	1	EA
78	480652	ALARM97DBA DUAL TONE 12/24V	1	EA
79	0181030	WIRE 16 FEM188 FEM250FI 15	1	EA
80	3040046	TERM, .250 MALE SLIP-ON F.I. 22/18 WIRE	1	EA
81	3044161	TERM R10I 16/14	1	EA
82	0090622	WIRE 18 FEM188I FEM250I 9	1	EA
83	0084135	WIRE 16 F250FI F188I 9 RSTR7.5	1	EA
84	PNNA	WASHER STAR #10	3	EA
85	0151910	WIRE 16 R6 R10 14	1	EA
86	PNNA	SCR RHD 6-32 1.00 GR5	4	EA
87	PNNA	SCR TRHD 10-24 1.00 GR5	1	EA
88	0073885	WIRE 16 R61 FEM 250FI 18	1	EA
89	PNNA	SCR TRHD 10-24 .500 GR5	1	EA
90	PNNA	WASHER STAR #6	1	EA
91	0071557	WIRE 18 R8I MALE250FI 7	1	EA
93	3040469	RELAY SPDT 12V 30AMP SONG	1	EA

Courtesy of Crane.Market

Item	Part No.	Name	Qty	Uom
94	PNNA	DECAL CAUTN MOVE CONT HDL SLOW	1	EA
95	PNNA	DECAL CAUTN DO NOT OPERATE	1	EA
96	PNNA	DECAL CAUTN DO NOT USE BOOM	1	EA

Courtesy of Crane.Market

ELECTRICAL

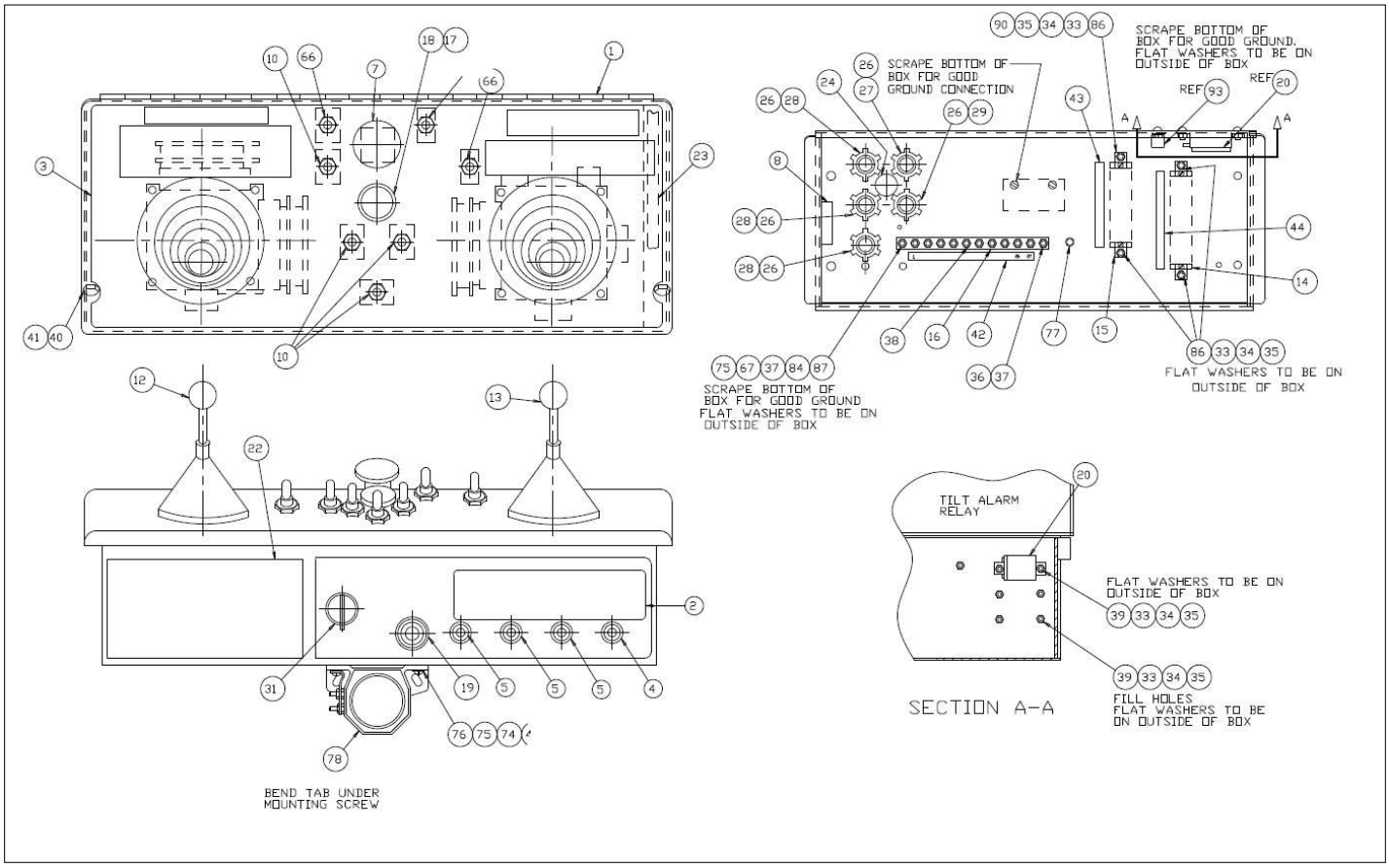

Courtesy of Crane.Market

Item	Part No.	Name	Qty	Uom
1	0180842	CONTROL BOX	1	EA
2	0180846	PLACARD PLATFORM CONTROL BOX FRONT	1	EA
3	0081979	PLAC PLATF CONT BOX TOP	1	EA
4	3040068	CIRCUIT BREAKER 20 AMP	1	EA
5	3040535	CIRCUIT BREAKER 3AMP	3	EA
6	0073295	WIRE 16 R6I FEM250FI 8	1	EA
7	3020020	SWITCH EMERGENCY STOP PUSH/PULL	1	EA
8	0070967	CORROSION INHIBITOR STICK-BACK	1	EA
9	3020080	SWITCH TOGGLE SPDT MOM/ON	1	EA
10	3020018	SWITCH TOGGLE DPDT (ON) OFF (ON)	4	EA
12	3040493	CONTROLLER 33HZ LIFT/SWING	1	EA
13	3040492	CONTROLLER 33HZ DRIVE/STEER	1	EA
14	3040057	TERMINAL STRIP 18 CIRCUIT	1	EA
15	3040433	TERMINAL STRIP (12) .188 TAB	1	EA
16	3044710	TERM STRIP (10) #10 STUD	1	EA
17	0180949	RHEOSTAT	1	EA
18	3040348	KNOB RHEOSTAT	1	EA
19	3040411	ALARM MINI SIREN 6-28VDC-	1	EA
20	3040188	RELAY SPDT 12V 30AMP SONG	1	EA
21	0181654	DECAL DNGR INSPECT UNIT	1	EA
22	0072530	DECAL DNGR ELEC HAZARD	1	EA
23	7190001	GASKET	72 IN	EA
24	3040031	PLUG HOLE .750	1	EA
26	3040110	NUT LKG HUB .750 SAMEAS 962129	5	EA
27	3040285	CONN .75 .375-.500	1	EA

Courtesy of Crane.Market

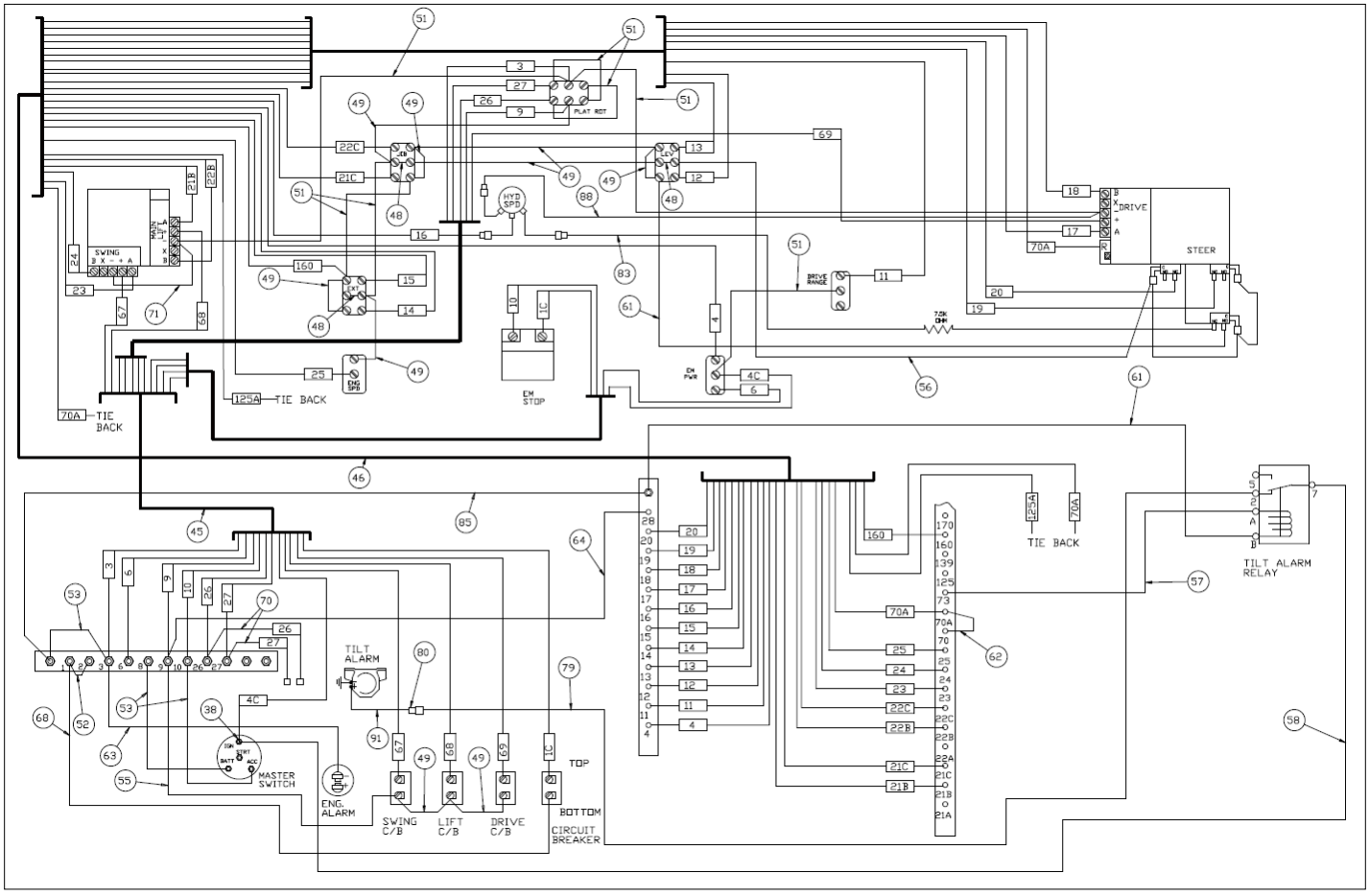

Courtesy of Crane.Market

Item	Part No.	Name	Qty	Uom
28	3040116	CONN .75 .500-.625	3	EA
29	3040295	CONN .75 .625-.75	1	EA
31	3020090	SW ANTI-RESTART IGNITION-	1	EA
33	5560664	WASHER METRIC M6 LOCK	10	EA
34	986159	WSHR FLAT 6	10	EA
35	5569997	NUT HEX 6-32	10	EA
36	5560025	SCR TRHD 10-24 .75 GR5	1	EA
37	5560034	NUT HEX LKG 10-24	3	EA
38	5560038	NUT #10-32 ESNA	14	EA
39	974239	SCREW RHD #6-32 .50	6	EA
40	970049	BOLT HEXHD .250-20 1.00 GR. 5	2	EA
41	5560264	NUT LKG .250-20	4	EA
42	0180886	DECAL TERM STRIP HORIZ 10TERM	1	EA
43	0180887	DECAL TERM STRIP HORIZ 13TERM	1	EA
44	0180888	DECAL TERM STRIP HORIZ 16TERM	1	EA
45	0180850	WIRE ASSY PLAT CONT BOX	1	EA
46	0082007	WIRE ASSEMBLY - CONTROL	1	EA
48	0060373	JUMPER, SWITCH TERMINAL STRAP	3	EA
49	0070747	WIRE 16 R61 R61 3	8	EA
51	0070730	WIRE 16 R61 R61 5.5	7	EA
52	0070711	WIRE 12 R10I R10I 3	1	EA
53	0070712	WIRE 12 R10I R10I 5	3	EA
55	0240483	WIRE 16 R61 R101 8	1	EA
56	0181074	WIRE 18	1	EA
57	0071511	WIRE 18 FEM188I FEM188I 11	1	EA
58	0071534	WIRE 18 R10I FEM188I 21	1	EA
61	0181028	WIRE 16 R6 FEM188 10.5	2	EA

Courtesy of Crane.Market

Item	Part No.	Name	Qty	Uom
62	0110468	WIRE 16 FEM188I FEM188I 4	1	EA
63	0151816	WIRE 16 R10I R10I 7.5	1	EA
64	0070713	WIRE 18 R10I FEM188I 10	1	EA
66	3020013	SWITCH TOGGLE SPST ON OFF SEALED	2	EA
67	PNNA	WASHER FLAT #10	2	EA
68	0181029	WIRE 12 R6 R10 19.5	1	EA
70	0181031	WIRE 12 R10 FEM250FI 11	2	EA
71	0070746	WIRE 16 R61 R61 9	1	EA
75	986019	WASHER FLAT .250	2	EA
76	970029	CAPSCREW 1/4-20 X 3/4 INCH LONG HEX HEAD GRADE 5	2	EA
77	5569711	GROMMET .438ID .688DIAX.125GRV	1	EA
78	480652	ALARM97DBA DUAL TONE 12/24V	1	EA
79	0181030	WIRE 16 FEM188 FEM250FI 15	1	EA
80	3040046	TERM, .250 MALE SLIP-ON F.I. 22/18 WIRE	1	EA
81	3044161	TERM R10I 16/14	1	EA
82	0090622	WIRE 18 FEM188I FEM250I 9	1	EA
83	0084135	WIRE 16 F250FI F188I 9 RSTR7.5	1	EA
84	5560703	WSHR STAR 10 EXTERNAL TOOTH	3	EA
85	0151910	WIRE 16 R6 R10 14	1	EA
86	974289	MACHINE SCREW #6-32 X 1-1/4 INCH LONG ROUND HEAD	4	EA
87	5560673	MACHINE SCREW #10-24NC X 1" LG	1	EA
88	0073885	WIRE 16 R61 FEM 250FI 18	1	EA
89	5560609	SCR TRHD 10-24 .50	1	EA
90	5560663	WSHR STAR 6 EXTERNAL TOOTH	1	EA

Courtesy of Crane.Market

Item	Part No.	Name	Qty	Uom
91	0071557	WIRE 18 R8I MALE250FI 7	1	EA
94	0181655	DECAL CAUTN MOVE CONT HDL SLOW	1	EA
95	0170372	DECAL CAUTN DO NOT OPERATE	1	EA
96	0073668	DECAL CAUTN DO NOT USE BOOM (DECAL LISTED IN BOM NOT ID WITH DWG REV N 0180948)	1	EA

Courtesy of Crane.Market

ELECTRICAL

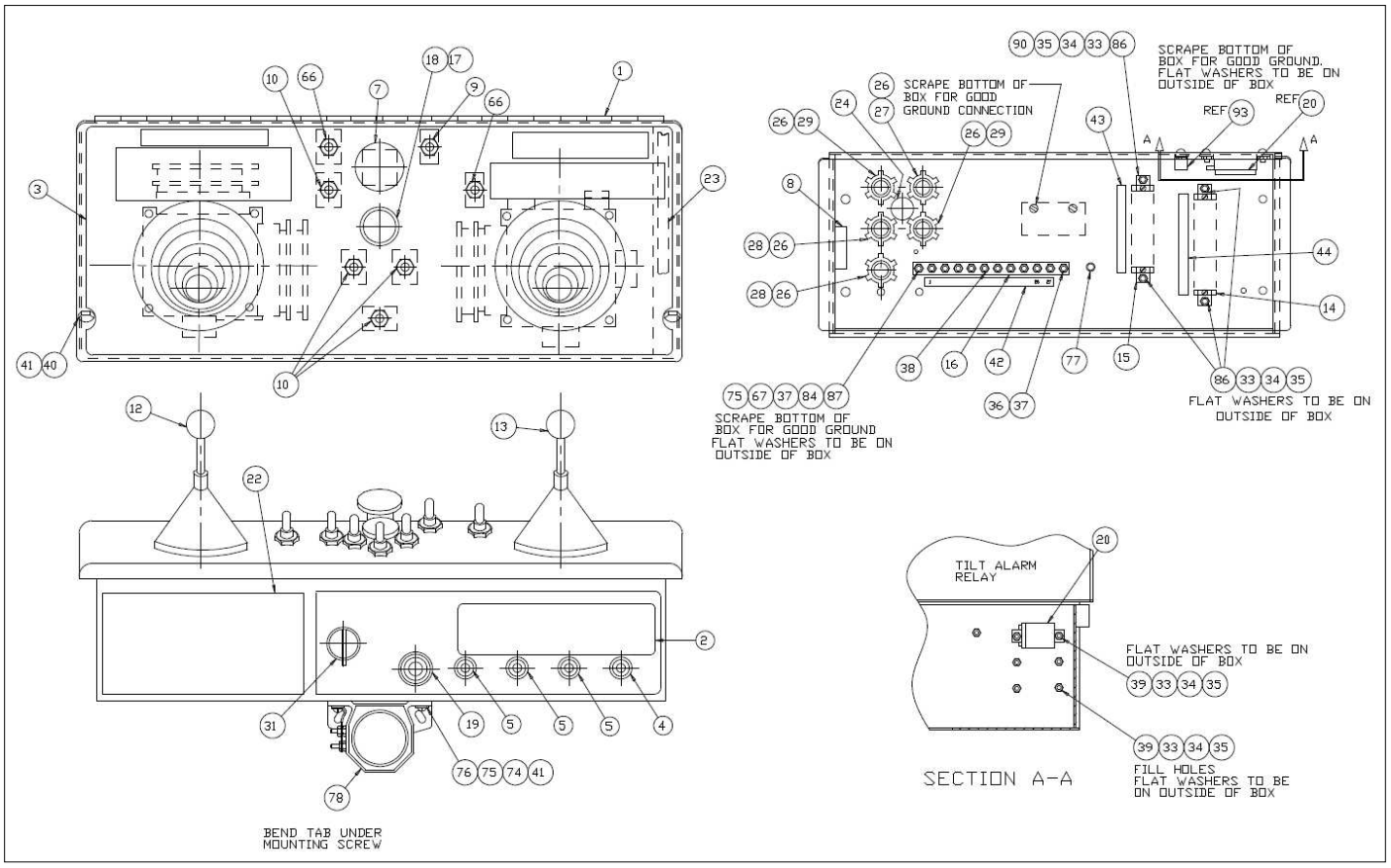

Courtesy of Crane.Market

Item	Part No.	Name	Qty	Uom
1	0180842	CONTROL BOX	1	EA
2	0180846	PLACARD PLATFORM CONTROL BOX FRONT	1	EA
3	0081979	PLAC PLATF CONT BOX TOP	1	EA
4	3040068	CIRCUIT BREAKER 20 AMP	1	EA
5	3040535	CIRCUIT BREAKER 3AMP	3	EA
7	3020020	SWITCH EMERGENCY STOP PUSH/PULL	1	EA
8	0070967	CORROSION INHIBITOR STICK-BACK	1	EA
9	3020080	SWITCH TOGGLE SPDT MOM/ON	1	EA
10	3020018	SWITCH TOGGLE DPDT (ON) OFF (ON)	4	EA
12	3040493	CONTROLLER 33HZ LIFT/SWING	1	EA
13	3040492	CONTROLLER 33HZ DRIVE/STEER	1	EA
14	3040057	TERMINAL STRIP 18 CIRCUIT	1	EA
15	3040433	TERMINAL STRIP (12) .188 TAB	1	EA
16	3044710	TERM STRIP (10) #10 STUD	1	EA
17	0082002	RHEOSTAT SUB ASSEMBLY	1	EA
18	3040348	KNOB RHEOSTAT	1	EA
19	3040411	ALARM MINI SIREN 6-28VDC-	1	EA
20	3040188	RELAY SPDT 12V 30AMP SONG	1	EA
21	0181654	DECAL DNGR INSPECT UNIT	1	EA
22	0072530	DECAL DNGR ELEC HAZARD	1	EA
23	7190001	GASKET	72 IN	EA
24	3040301	PLUG HOLE .750	1	EA
26	3040110	NUT LKG HUB .750 SAMEAS 962129	5	EA
27	3040285	CONN .75 .375-.500	1	EA
28	3040116	CONN .75 .500-.625	2	EA

Courtesy of Crane.Market

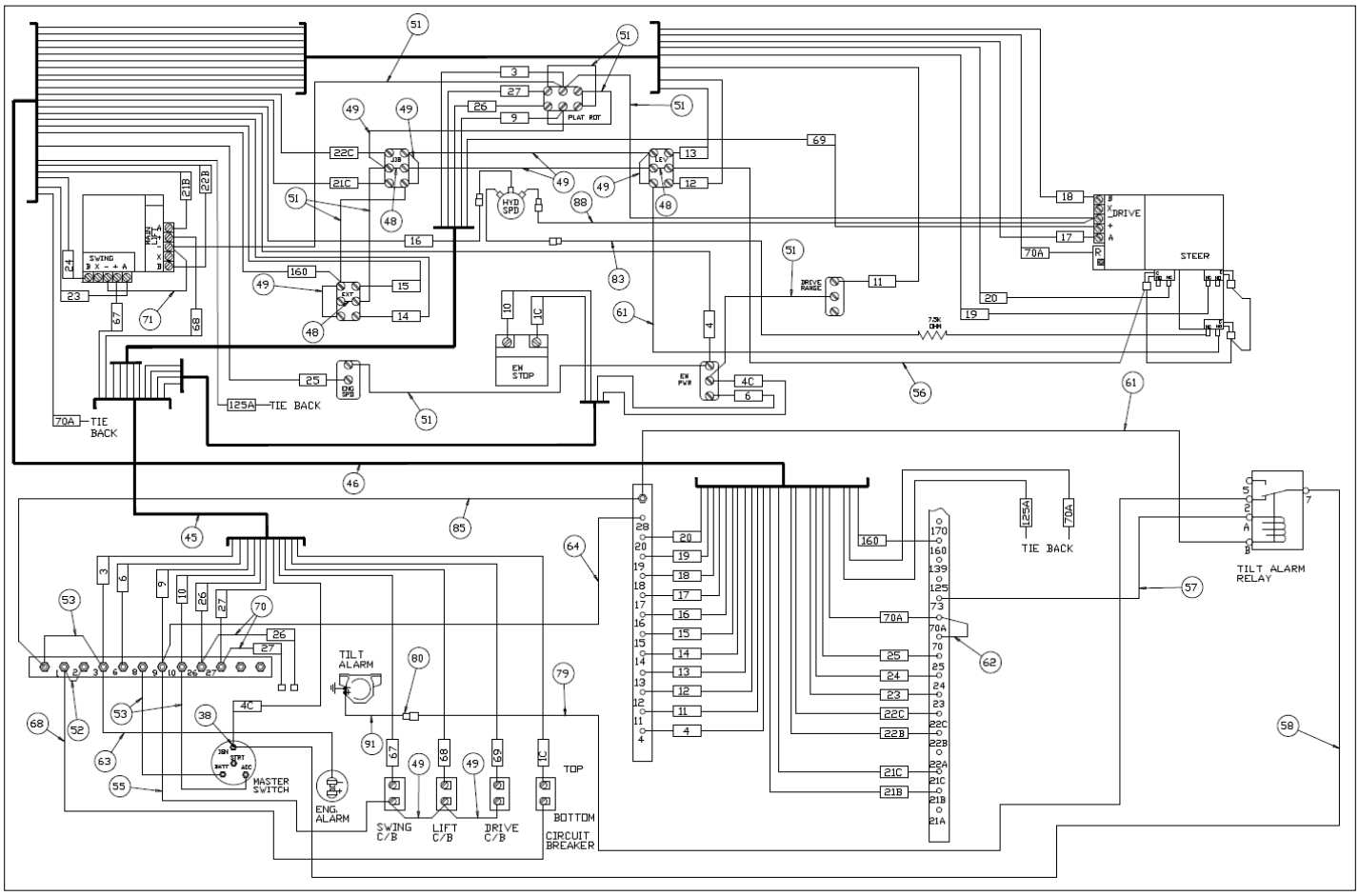

Courtesy of Crane.Market

Item	Part No.	Name	Qty	Uom
29	3040295	CONN .75 .625-.75	2	EA
31	3020090	SW ANTI-RESTART IGNITION-	1	EA
33	5560664	WASHER METRIC M6 LOCK	10	EA
34	986159	WSHR FLAT 6	10	EA
35	5569997	NUT HEX 6-32	10	EA
36	5563025	TERMINAL STRIP #10 STUD 6 CIR	1	EA
37	5560034	NUT HEX LKG 10-24	3	EA
38	5560038	NUT #10-32 ESNA	14	EA
39	974239	SCREW RHD #6-32 .50	6	EA
40	970049	BOLT HEXHD .250-20 1.00 GR. 5	2	EA
41	5560264	NUT LKG .250-20	4	EA
42	0180886	DECAL TERM STRIP HORIZ 10TERM	1	EA
43	0180887	DECAL TERM STRIP HORIZ 13TERM	1	EA
44	0180888	DECAL TERM STRIP HORIZ 16TERM	1	EA
45	0180850	WIRE ASSY PLAT CONT BOX	1	EA
46	0082007	WIRE ASSEMBLY - CONTROL	1	EA
48	0060373	JUMPER, SWITCH TERMINAL STRAP	3	EA
49	0070747	WIRE 16 R61 R61 3	8	EA
51	0070730	WIRE 16 R61 R61 5.5	8	EA
52	0070711	WIRE 12 R10I R10I 3	1	EA
53	0070712	WIRE 12 R10I R10I 5	3	EA
55	0240483	WIRE 16 R61 R101 8	1	EA
56	0181074	WIRE 18	1	EA
57	0071511	WIRE 18 FEM188I FEM188I 11	1	EA
58	0071534	WIRE 18 R10I FEM188I 21	1	EA
61	0181028	WIRE 16 R6 FEM188 10.5	2	EA

Courtesy of Crane.Market

Item	Part No.	Name	Qty	Uom
62	0110468	WIRE 16 FEM188I FEM188I 4	1	EA
63	0151816	WIRE 16 R10I R10I 7.5	1	EA
64	0070713	WIRE 18 R10I FEM188I 10	1	EA
66	3020013	SWITCH TOGGLE SPST ON OFF SEALED	2	EA
67	PNNA	WASHER FLAT #10	2	EA
68	0181029	WIRE 12 R6 R10 19.5	1	EA
70	0181031	WIRE 12 R10 FEM250FI 11	2	EA
71	0070746	WIRE 16 R61 R61 9	1	EA
74	5560341	WASHER STAR .250	1	EA
75	986019	WASHER FLAT .250	2	EA
76	970029	CAPSCREW 1/4-20 X 3/4 INCH LONG HEX HEAD GRADE 5	2	EA
77	5569711	GROMMET .438ID .688DIAX.125GRV	1	EA
78	480652	ALARM97DBA DUAL TONE 12/24V	1	EA
79	0181030	WIRE 16 FEM188 FEM250FI 15	1	EA
80	3040046	TERM, .250 MALE SLIP-ON F.I. 22/18 WIRE	1	EA
81	3044161	TERM R10I 16/14	1	EA
83	0084135	WIRE 16 F250FI F188I 9 RSTR7.5	1	EA
84	5560703	WSHR STAR 10 EXTERNAL TOOTH	3	EA
85	0151910	WIRE 16 R6 R10 14	1	EA
86	974289	MACHINE SCREW #6-32 X 1-1/4 INCH LONG ROUND HEAD	4	EA
87	5560673	MACHINE SCREW #10-24NC X 1" LG	1	EA
88	0073885	WIRE 16 R61 FEM 250FI 18	1	EA
89	5560609	SCR TRHD 10-24 .50	1	EA
90	5560663	WSHR STAR 6 EXTERNAL TOOTH	1	EA

Courtesy of Crane.Market

Item	Part No.	Name	Qty	Uom
91	0071557	WIRE 18 R8I MALE250FI 7	1	EA
94	0181655	DECAL CAUTN MOVE CONT HDL SLOW	1	EA
95	0170372	DECAL CAUTN DO NOT OPERATE	1	EA
96	073668	DECAL CAUTN DO NOT USE BOOM	1	EA

Courtesy of Crane.Market

ELECTRICAL

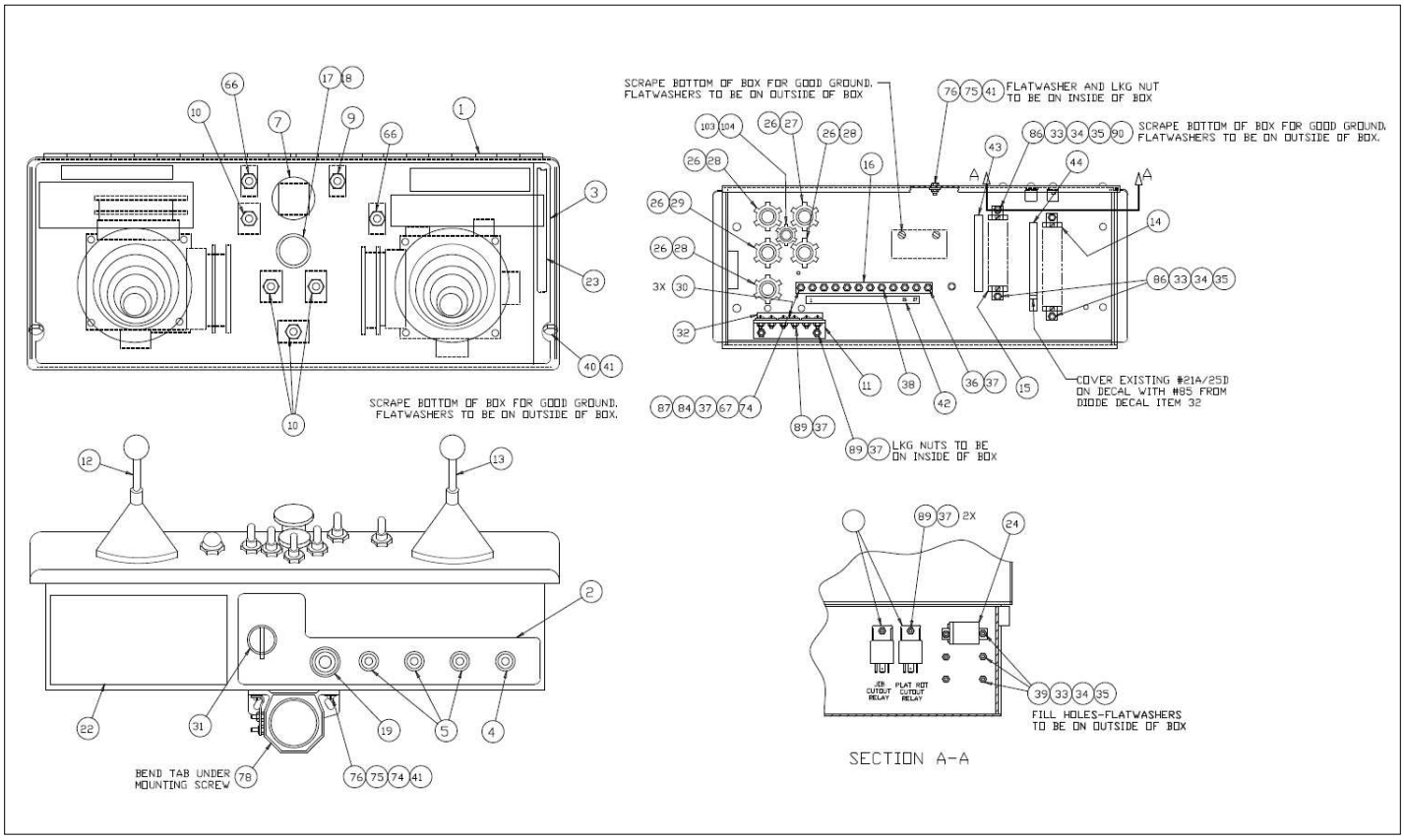

Courtesy of Crane.Market

Item	Part No.	Name	Qty	Uom
1	0180842	CONTROL BOX	1	EA
2	0180846	PLACARD PLATFORM CONTROL BOX FRONT	1	EA
3	0081979	PLAC PLATF CONT BOX TOP	1	EA
4	3040068	CIRCUIT BREAKER 20 AMP	1	EA
5	3040535	CIRCUIT BREAKER 3AMP	3	EA
6	0073295	WIRE 16 R6I FEM250FI 8	2	EA
7	3020020	SWITCH EMERGENCY STOP PUSH/PULL	1	EA
8	0070967	CORROSION INHIBITOR STICK-BACK	1	EA
9	3020080	SWITCH TOGGLE SPDT MOM/ON	1	EA
10	3020018	SWITCH TOGGLE DPDT (ON) OFF (ON)	4	EA
11	0172240	DIODE HOLDER-6PLC	1	EA
12	3040493	CONTROLLER 33HZ LIFT/SWING	1	EA
13	3040492	CONTROLLER 33HZ DRIVE/STEER	1	EA
14	3040057	TERMINAL STRIP 18 CIRCUIT	1	EA
15	3040433	TERMINAL STRIP (12) .188 TAB	1	EA
16	3044710	TERM STRIP (10) #10 STUD	1	EA
17	0082002	RHEOSTAT SUB ASSEMBLY	1	EA
18	3040348	KNOB RHEOSTAT	1	EA
19	3040411	ALARM MINI SIREN 6-28VDC-	1	EA
20	0084135	WIRE 16 F250FI F188I 9 RSTR7.5	1	EA
21	0073885	WIRE 16 R61 FEM 250FI 18	1	EA
22	0072530	DECAL DNGR ELEC HAZARD	1	EA
23	7190001	GASKET	72 IN	EA
24	3040188	RELAY SPDT 12V 30AMP SONG	1	EA

Courtesy of Crane.Market

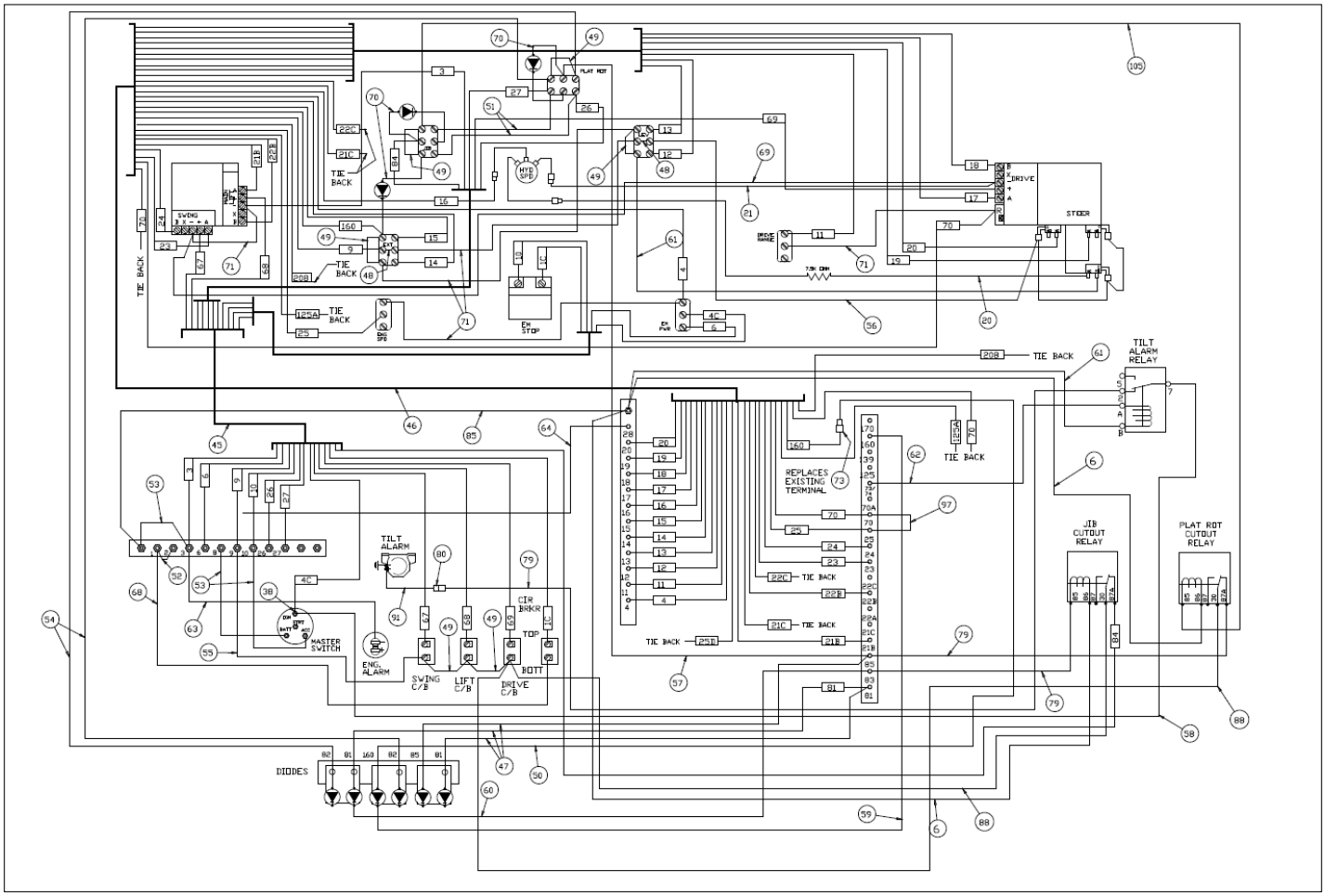

Courtesy of Crane.Market

Item	Part No.	Name	Qty	Uom
26	3040110	NUT LKG HUB .750 SAMEAS 962129	5	EA
27	3040285	CONN .75 .375-.500	1	EA
28	3040116	CONN .75 .500-.625	3	EA
29	3040295	CONN .75 .625-.75	1	EA
30	0073631	DIODE STAND-OFF 2-DIODE	3	EA
31	3020090	SW ANTI-RESTART IGNITION-	1	EA
32	0112797	DECAL DIODES	1	EA
33	5560664	WASHER METRIC M6 LOCK	10	EA
34	986159	WSHR FLAT 6	10	EA
35	5569997	NUT HEX 6-32	10	EA
36	5563025	TERMINAL STRIP #10 STUD 6 CIR	1	EA
37	5560034	NUT HEX LKG 10-24	10	EA
38	5560038	NUT #10-32 ESNA	14	EA
39	974239	SCREW RHD #6-32 .50	6	EA
40	970049	BOLT HEXHD .250-20 1.00 GR. 5	2	EA
41	5560264	NUT LKG .250-20	5	EA
42	0180886	DECAL TERM STRIP HORIZ 10TERM	1	EA
43	0180887	DECAL TERM STRIP HORIZ 13TERM	1	EA
44	0180888	DECAL TERM STRIP HORIZ 16TERM	1	EA
45	0180850	WIRE ASSY PLAT CONT BOX	1	EA
46	0082007	WIRE ASSEMBLY - CONTROL	1	EA
47	0172236	WIRE 16 FEM188I DIO 16	3	EA
48	0060373	JUMPER, SWITCH TERMINAL STRAP	2	EA
49	0070747	WIRE 16 R61 R61 3	6	EA
50	0172237	WIRE 16 FEM250FI DIO 16	1	EA

Courtesy of Crane.Market

Item	Part No.	Name	Qty	Uom
51	0070730	WIRE 16 R61 R61 5.5	2	EA
52	0070711	WIRE 12 R10I R10I 3	1	EA
53	0070712	WIRE 12 R10I R10I 5	3	EA
54	0172238	WIRE 16 R6I DIO 30	2	EA
55	0240483	WIRE 16 R61 R101 8	1	EA
56	0181074	WIRE 18	1	EA
57	0182061	WIRE 16 6RI FEM188I 42	1	EA
58	0071534	WIRE 18 R10I FEM188I 21	1	EA
59	0110835	JUMPER WIRE	1	EA
60	0073728	WIRE 16 R10 FEM188I 18	1	EA
61	0181028	WIRE 16 R6 FEM188 10.5	2	EA
62	0071511	WIRE 18 FEM188I FEM188I 11	1	EA
63	0151816	WIRE 16 R10I R10I 7.5	1	EA
64	0070713	WIRE 18 R10I FEM188I 10	1	EA
66	3020013	SWITCH TOGGLE SPST ON OFF SEALED	2	EA
67	986009	FLAT WASHER #10	2	EA
68	0181029	WIRE 12 R6 R10 19.5	1	EA
69	0101298	WIRE 18 R6I R6I 23.5	1	EA
70	0111477	WIRE 16 R61 R61 10 DIO	3	EA
71	0070746	WIRE 16 R61 R61 9	5	EA
73	3040082	TERM MALE250FI 16/14	1	EA
74	5560341	WASHER STAR .250	1	EA
75	986019	WASHER FLAT .250	3	EA
76	970029	CAPSCREW 1/4-20 X 3/4 INCH LONG HEX HEAD GRADE 5	3	EA
77	5569711	GROMMET .438ID .688DIAX.125GRV	1	EA
78	480652	ALARM97DBA DUAL TONE 12/24V	1	EA
79	0181030	WIRE 16 FEM188 FEM250FI 15	3	EA

Courtesy of Crane.Market

Item	Part No.	Name	Qty	Uom
80	3040046	TERM, .250 MALE SLIP-ON F.I. 22/18 WIRE	1	EA
81	3044161	TERM R10I 16/14	1	EA
84	5560703	WSHR STAR 10 EXTERNAL TOOTH	3	EA
85	0151910	WIRE 16 R6 R10 14	1	EA
86	974289	MACHINE SCREW #6-32 X 1-1/4 INCH LONG ROUND HEAD	4	EA
87	5560673	MACHINE SCREW #10-24NC X 1" LG	1	EA
88	0073884	WIRE 16 R61 FEM250FI 24	2	EA
89	5560609	SCR TRHD 10-24 .50	8	EA
90	5560663	WSHR STAR 6 EXTERNAL TOOTH	1	EA
91	0071557	WIRE 18 R8I MALE250FI 7	1	EA
93	3040469	RELAY SPDT 12V 30AMP SONG	2	EA
97	0110468	WIRE 16 FEM188I FEM188I 4	1	EA
103	3040070	LOCKNUT .50	1	EA
104	3040187	CONNECTOR	1	EA
105	0150756	WIRE 16 R8I FEM250FI 36	1	EA

Courtesy of Crane.Market

ELECTRICAL

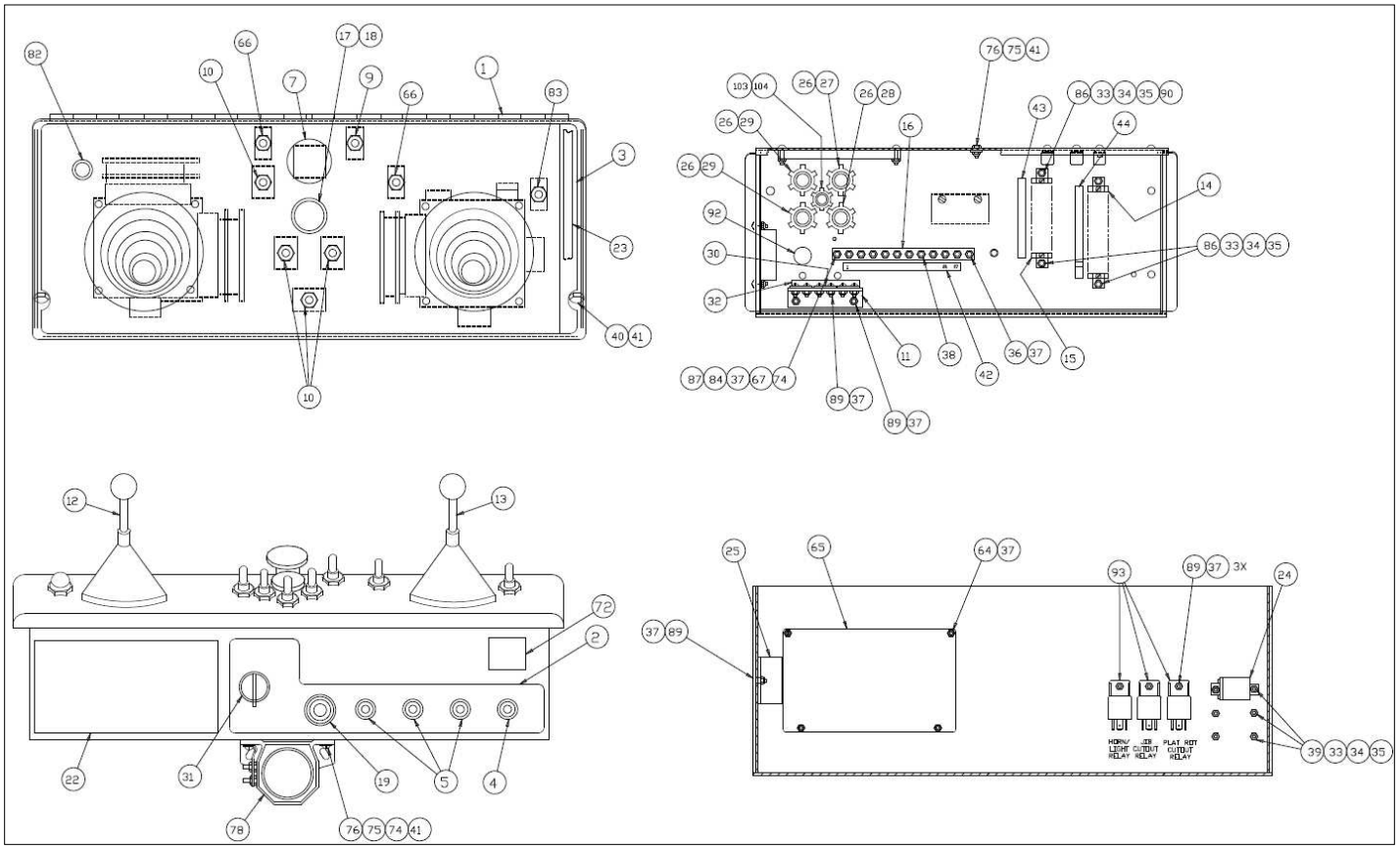

Courtesy of Crane.Market

Item	Part No.	Name	Qty	Uom
1	0180842	CONTROL BOX	1	EA
2	0180846	PLACARD PLATFORM CONTROL BOX FRONT	1	EA
3	0081979	PLAC PLATF CONT BOX TOP	1	EA
4	3040068	CIRCUIT BREAKER 20 AMP	1	EA
5	3040535	CIRCUIT BREAKER 3AMP	3	EA
6	0073295	WIRE 16 R6I FEM250FI 8	2	EA
7	3020020	SWITCH EMERGENCY STOP PUSH/PULL	1	EA
8	0070967	CORROSION INHIBITOR STICK-BACK	1	EA
9	3020080	SWITCH TOGGLE SPDT MOM/ON	1	EA
10	3020018	SWITCH TOGGLE DPDT (ON) OFF (ON)	4	EA
11	0172240	DIODE HOLDER-6PLC	1	EA
12	3040493	CONTROLLER 33HZ LIFT/SWING	1	EA
13	3040492	CONTROLLER 33HZ DRIVE/STEER	1	EA
14	3040057	TERMINAL STRIP 18 CIRCUIT	1	EA
15	3040433	TERMINAL STRIP (12) .188 TAB	1	EA
16	3044710	TERM STRIP (10) #10 STUD	1	EA
17	0082002	RHEOSTAT SUB ASSEMBLY	1	EA
18	3040348	KNOB RHEOSTAT	1	EA
19	3040411	ALARM MINI SIREN 6-28VDC-	1	EA
20	0084135	WIRE 16 F250FI F188I 9 RSTR7.5	1	EA
21	0073885	WIRE 16 R61 FEM 250FI 18	1	EA
22	0072530	DECAL DNGR ELEC HAZARD	1	EA
23	7190001	GASKET	72 IN	EA
24	3040188	RELAY SPDT 12V 30AMP SONG	1	EA
25	3220096	OVERLOAD FAULT DETECTION	1	EA

Courtesy of Crane.Market

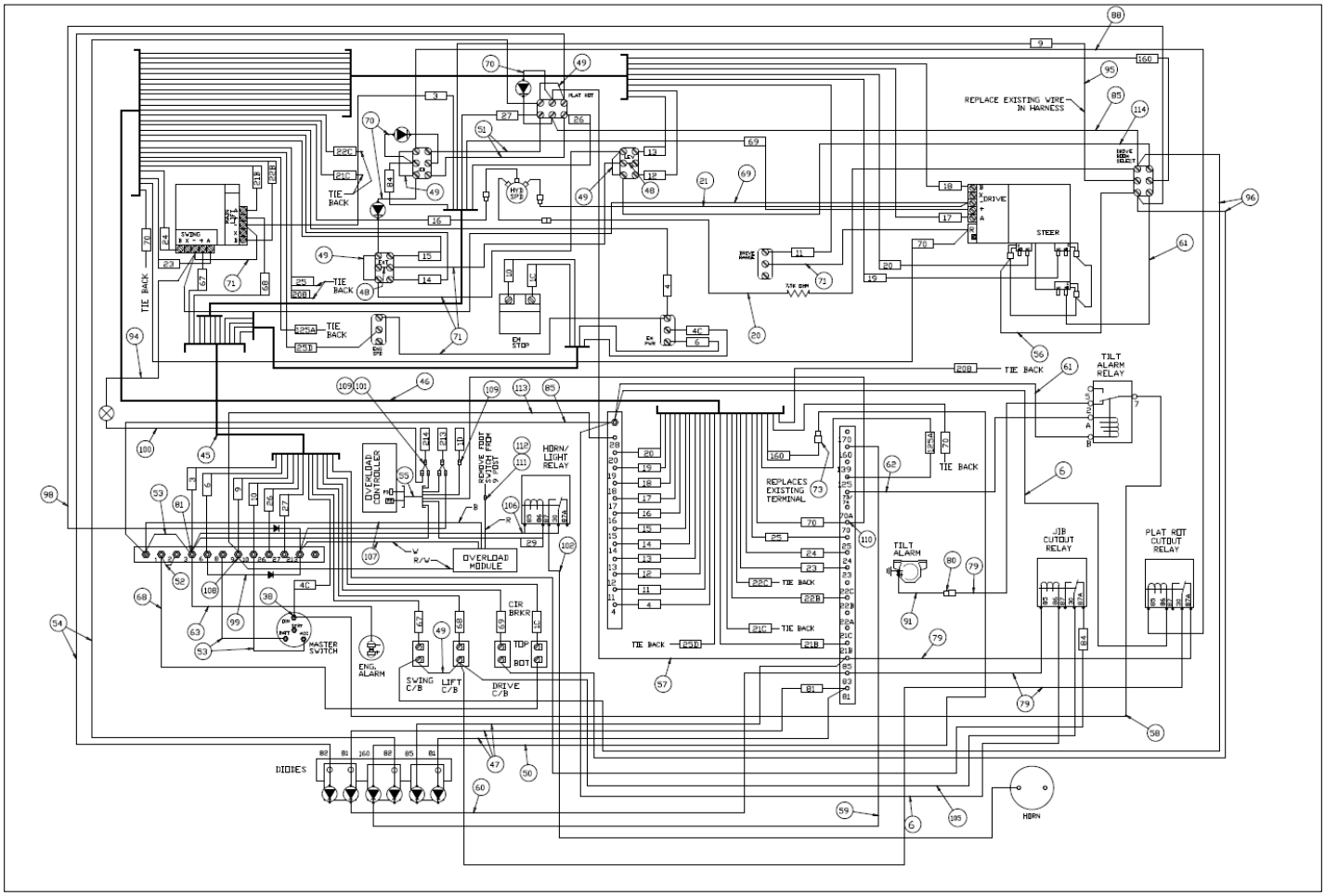

Courtesy of Crane.Market

Item	Part No.	Name	Qty	Uom
26	3040110	NUT LKG HUB .750 SAMEAS 962129	4	EA
27	3040285	CONN .75 .375-.500	1	EA
28	3040116	CONN .75 .500-.625	1	EA
29	3040295	CONN .75 .625-.75	2	EA
30	0073631	DIODE STAND-OFF 2-DIODE	3	EA
31	3020090	SW ANTI-RESTART IGNITION-	1	EA
32	0112797	DECAL DIODES	1	EA
33	056021-006	WASHER LOCK M6 DIN 127	10	EA
34	986159	WSHR FLAT 6	10	EA
35	5569997	NUT HEX 6-32	10	EA
36	974689	SCR RDH MACH 10-24 .75	1	EA
37	5560034	NUT HEX LKG 10-24	16	EA
38	5560038	NUT #10-32 ESNA	14	EA
39	974239	SCREW RHD #6-32 .50	6	EA
40	970049	BOLT HEXHD .250-20 1.00 GR. 5	2	EA
41	5560004	NUT HEXHD .250-20 LKG	5	EA
42	0180886	DECAL TERM STRIP HORIZ 10TERM	1	EA
43	0180887	DECAL TERM STRIP HORIZ 13TERM	1	EA
44	0180888	DECAL TERM STRIP HORIZ 16TERM	1	EA
45	0180850	WIRE ASSY PLAT CONT BOX	1	EA
46	0082007	WIRE ASSEMBLY - CONTROL	1	EA
47	0172236	WIRE 16 FEM188I DIO 16	3	EA
48	0060373	JUMPER, SWITCH TERMINAL STRAP	2	EA
49	0070747	WIRE 16 R61 R61 3	5	EA
50	0172237	WIRE 16 FEM250FI DIO 16	1	EA
51	0070730	WIRE 16 R61 R61 5.5	2	EA

Courtesy of Crane.Market

Item	Part No.	Name	Qty	Uom
52	0070711	WIRE 12 R10I R10I 3	1	EA
53	0070712	WIRE 12 R10I R10I 5	3	EA
54	0172238	WIRE 16 R6I DIO 30	2	EA
55	0421841	WIRE HARNESS OVERLOAD MODULE	1	EA
56	0181074	WIRE 18	1	EA
57	0182061	WIRE 16 6RI FEM188I 42	1	EA
58	0071534	WIRE 18 R10I FEM188I 21	1	EA
59	0110835	JUMPER WIRE	1	EA
60	0073728	WIRE 16 R10 FEM188I 18	1	EA
61	0181028	WIRE 16 R6 FEM188 10.5	2	EA
62	0071511	WIRE 18 FEM188I FEM188I 11	1	EA
63	0151816	WIRE 16 R10I R10I 7.5	1	EA
64	974709	SCREW RHD #10-24 X 1 PLATED	4	EA
65	116347-000	OVERLOAD CONTROLLER GP107	1	EA
66	3020013	SWITCH TOGGLE SPST ON OFF SEALED	2	EA
67	986009	FLAT WASHER #10	2	EA
68	0181029	WIRE 12 R6 R10 19.5	1	EA
69	0101298	WIRE 18 R6I R6I 23.5	1	EA
70	0111477	WIRE 16 R61 R61 10 DIO	3	EA
71	0070746	WIRE 16 R61 R61 9	5	EA
72	016181905	DECAL CE EMER LOWERING PROC	1	EA
73	3040082	TERM MALE250FI 16/14	1	EA
74	5560341	WASHER STAR .250	1	EA
75	986019	WASHER FLAT .250	3	EA
76	970029	CAPSCREW 1/4-20 X 3/4 INCH LONG HEX HEAD GRADE 5	3	EA

Courtesy of Crane.Market

Item	Part No.	Name	Qty	Uom
77	5569711	GROMMET .438ID .688DIAX.125GRV	1	EA
78	480652	ALARM97DBA DUAL TONE 12/24V	1	EA
79	0181030	WIRE 16 FEM188 FEM250FI 15	4	EA
80	3040046	TERM, .250 MALE SLIP-ON F.I. 22/18 WIRE	1	EA
81	3044161	TERM R10I 16/14	2	EA
82	3069524	LIGHT, RED LED 12V .69 DIA	1	EA
83	3020097	SWITCH TOGGLE DPDT ON/ON SEALED	2	EA
84	5560703	WSHR STAR 10 EXTERNAL TOOTH	3	EA
85	0151910	WIRE 16 R6 R10 14	1	EA
86	974289	MACHINE SCREW #6-32 X 1-1/4 INCH LONG ROUND HEAD	4	EA
87	5560673	MACHINE SCREW #10-24NC X 1" LG	1	EA
88	0073884	WIRE 16 R61 FEM250FI 24	1	EA
89	974659	SCREW RHD #10-24 X .50 PLATED	10	EA
90	5560663	WSHR STAR 6 EXTERNAL TOOTH	1	EA
91	0071557	WIRE 18 R8I MALE250FI 7	1	EA
92	3040301	PLUG HOLE .750	1	EA
93	3040469	RELAY SPDT 12V 30AMP SONG	3	EA
94	0151556	WIRE 16 R6 FEM1881 6	1	EA
95	0074589	WIRE 12 R6I R10I 34	1	EA
96	0071558	WIRE 16 R6I R6I 30	2	EA
97	0110468	WIRE 16 FEM188I FEM188I 4	1	EA
98	0084189	WIRE 16 R6I R10I 28 DIO	1	EA
99	0084190	WIRE 16 R10I R10I 4 DIO	1	EA
100	0111508	WIRE 16 FEM188 FEM250 24	1	EA

Courtesy of Crane.Market

Item	Part No.	Name	Qty	Uom
101	0182066	WIRE 16 3X MALE250FI 6	2	EA
102	0070759	JUMPER WIRE	1	EA
103	3040070	LOCKNUT .50	1	EA
104	3040187	CONNECTOR	1	EA
105	0151205	WIRE 16 FEM188 FEM250FI 7	1	EA
106	0152586	JUMPER WIRE ASSEMBLY	1	EA
107	3044146	TERM R10I 22/18	2	EA
108	3044854	REPLACEMENT TERMINAL	1	EA
109	3040083	TERM FEM250FI 16/14	5	EA
110	3046697	TERM FEM188I 16/14GA	1	EA
111	3040065	TERM FEM250FI 12/10 FULLY INSULATED	1	EA
112	3040064	TERM MALE250FI 12/10	1	EA
113	0070713	WIRE 18 R10I FEM188I 10	1	EA
114	0101299	WIRE 18 R6I R6I 17	2	EA

Courtesy of Crane.Market

ELECTRICAL

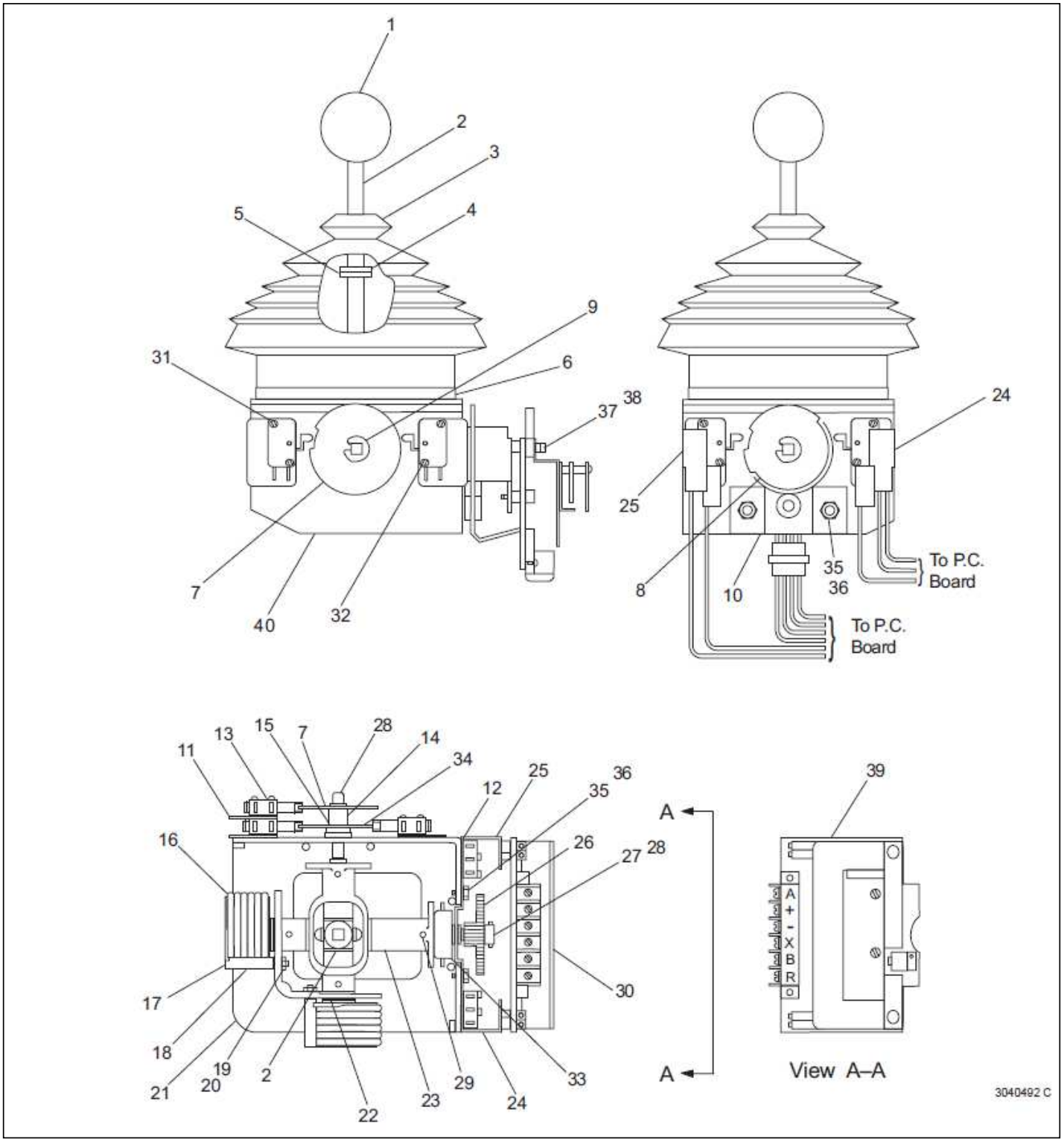

Courtesy of Crane.Market

Item	Part No.	Name	Qty	Uom
1	2660002	KNOB	1	EA
2	3040086	TERMINAL FEM250FI 16/14	1	EA
3	3040146	BOOT	1	EA
4	8150145	RING	1	EA
5	8150146	TENSION CLIP	1	EA
6	3040169	BOOT CLAMPING RING	1	EA
7	8150147	CAM	2	EA
8	8150009	FIXED CAM	1	EA
9	8150135	“E” CLIP	4	EA
10	8150148	MODIFIED BRACKET	1	EA
11	8150138	INSULATOR	4	EA
12	8150139	INSULATOR	2	EA
13	3020033	MICROSWITCH	6	EA
14	8150136	CAM SPACER	2	EA
15	8150149	BRASS WASHER	1	EA
16	8150005	SPRING RETURN WITH HOUSING	2	EA
17	8150004	SPRING RETURN BOLT	2	EA
18	8150150	WASHER	2	EA
19	8150144	WASHER SPLIT 5M BLACK	2	EA
20	8150143	NUT 5M HEX	2	EA
21	8150003	CASTING, MODIFIED	1	EA
22	3040271	BUSHING	4	EA
23	8150094	SECOND AXIS	1	EA
24	8150151	BRACKET, RIGHT SIDE	1	EA
25	8150152	BRACKET, LEFT SIDE	1	EA
26	3040073	DRIVE GEAR	1	EA
27	3040072	SLAVE GEAR	1	EA
28	8150082	BLANK CAM SHAFT	2	EA
29	8150013	TENSION PIN	4	EA

Courtesy of Crane.Market

Item	Part No.	Name	Qty	Uom
30	8150153	HEAT SINK	1	EA
31	8150140	SCREW #4-40 X 1-1/4 INCH LONG	4	EA
32	8150137	SCREW #4-40 X 3/4 INCH LONG	4	EA
33	3040392	POT WITH BRACKET AND CONNECTOR	1	EA
34	8150084	FIXED CAM	2	EA
35	8150154	SCREW METRIC M4 X 6MM LONG DIN 85	2	EA
36	8150155	WASHER METRIC M4	2	EA
37	8150141	SCREW METRIC M3.5 X 16MM LONG DIN 85	2	EA
38	8150156	WASHER	4	EA
39	8150142	GATE FOR DRIVE/STEER CONTROLLER	1	EA
40	3220073	CIRCUIT BOARD	1	EA

Courtesy of Crane.Market

ELECTRICAL

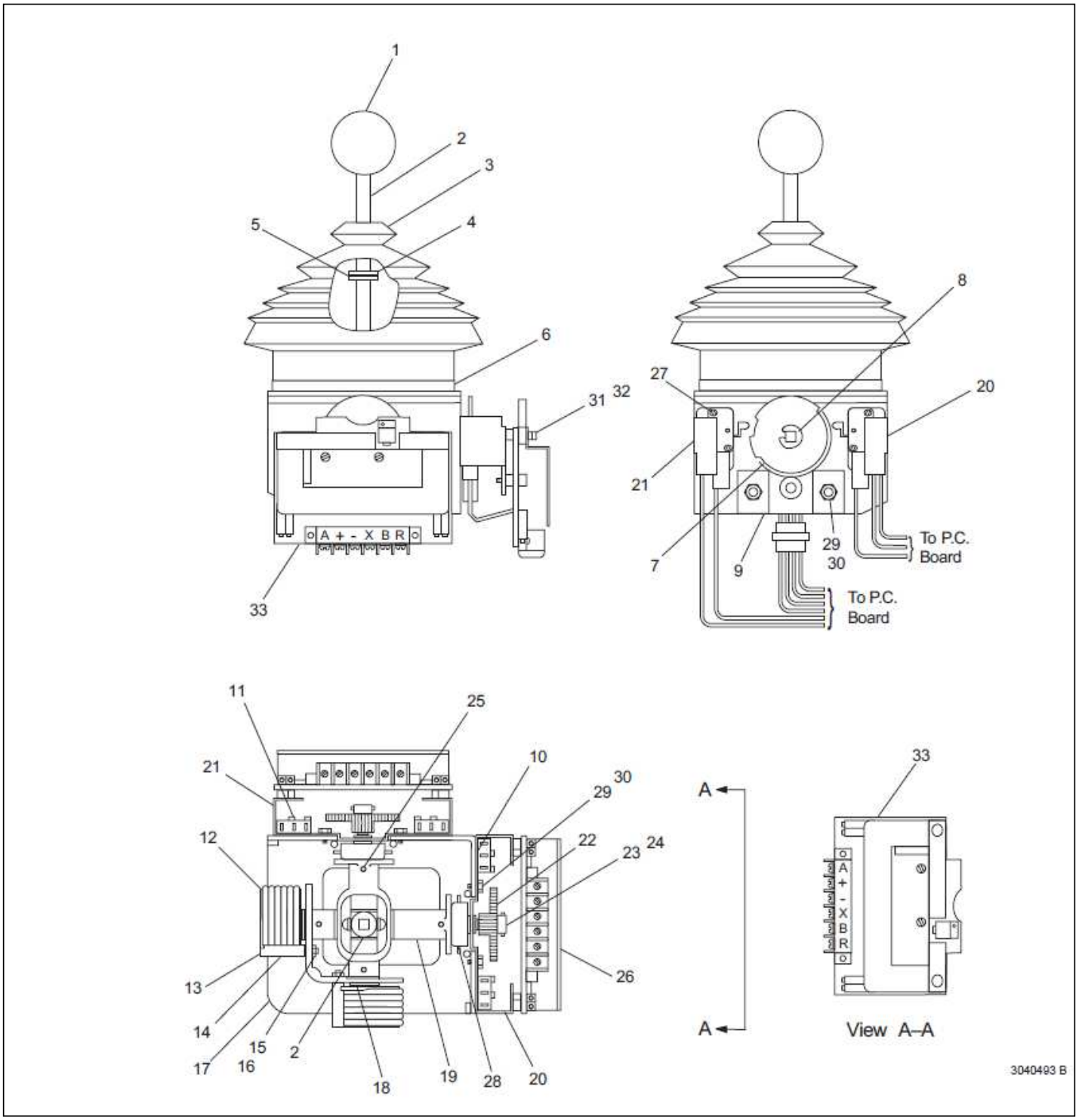

Courtesy of Crane.Market

Item	Part No.	Name	Qty	Uom
1	2660002	KNOB	1	EA
2	3040086	TERMINAL FEM250FI 16/14	1	EA
3	3040146	BOOT	1	EA
4	8150145	RING	1	EA
5	8150146	TENSION CLIP	1	EA
6	3040169	BOOT CLAMPING RING	1	EA
7	8150009	FIXED CAM	1	EA
8	8150135	“E” CLIP	4	EA
9	8150148	MODIFIED BRACKET	2	EA
10	8150138	INSULATOR	4	EA
11	3020033	MICROSWITCH	4	EA
12	8150005	SPRING RETURN WITH HOUSING	2	EA
13	8150004	SPRING RETURN BOLT	2	EA
14	8150150	WASHER	2	EA
15	8150144	WASHER SPLIT 5M BLACK	2	EA
16	8150143	NUT 5M HEX	2	EA
17	8150003	CASTING, MODIFIED	1	EA
18	3040271	BUSHING	4	EA
19	8150094	SECOND AXIS	1	EA
20	8150151	BRACKET, RIGHT SIDE	2	EA
21	8150152	BRACKET, LEFT SIDE	2	EA
22	3040073	DRIVE GEAR	2	EA
23	3040072	SLAVE GEAR	2	EA
24	8150082	BLANK CAM SHAFT	4	EA
25	8150013	TENSION PIN	4	EA
26	8150153	HEAT SINK	2	EA
27	8150140	SCREW #4-40 X 1-1/4 INCH LONG	8	EA
28	3040392	POT WITH BRACKET AND CONNECTOR	2	EA

Courtesy of Crane.Market

Item	Part No.	Name	Qty	Uom
29	8150154	SCREW METRIC M4 X 6MM LONG DIN 85	4	EA
30	8150155	WASHER METRIC M4	4	EA
31	8150141	SCREW METRIC M3.5 X 16MM LONG DIN 85	4	EA
32	8150156	WASHER	8	EA
33	3220073	CIRCUIT BOARD	1	EA

Courtesy of Crane.Market

ELECTRICAL

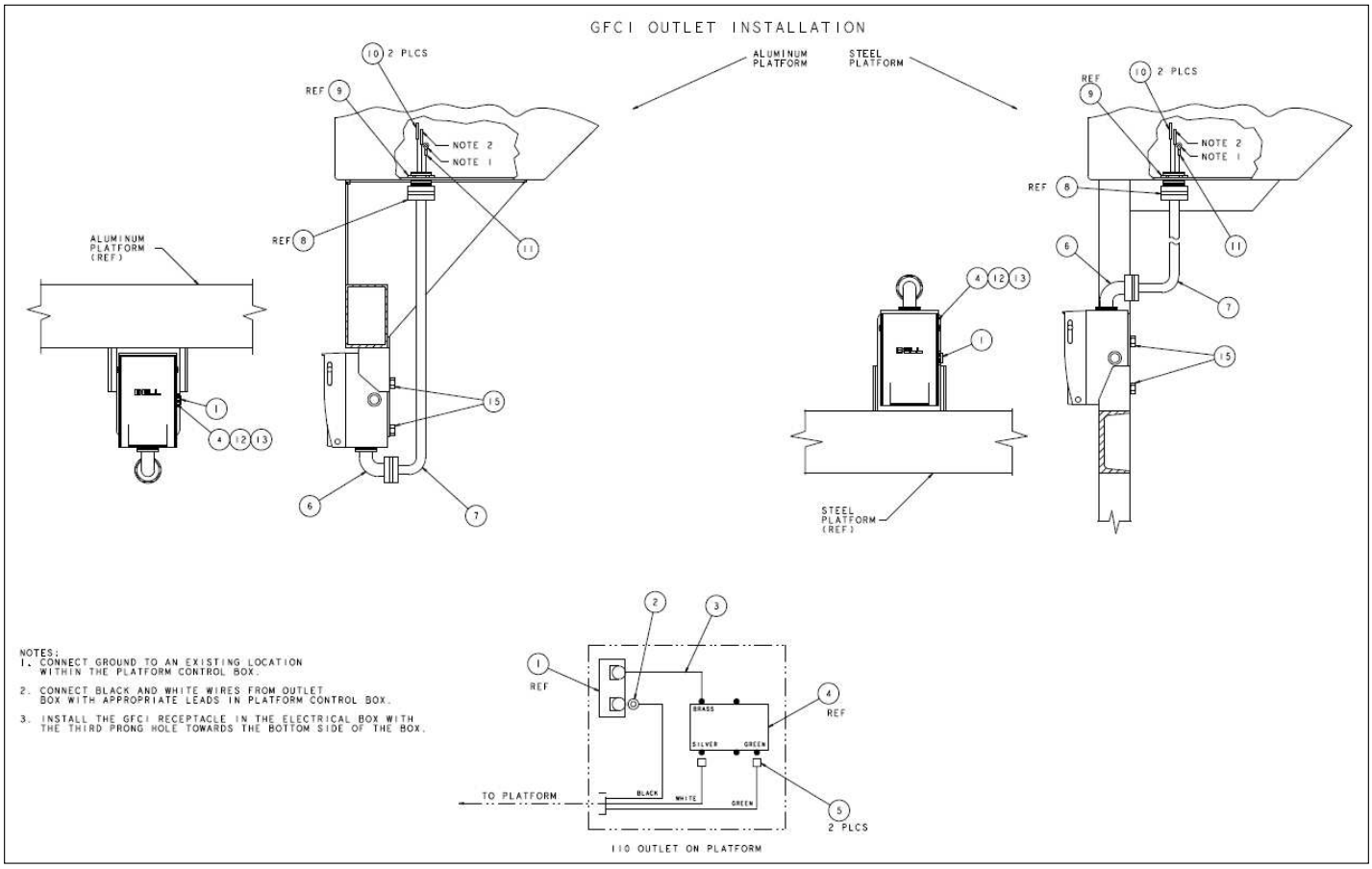

Courtesy of Crane.Market

Item	Part No.	Name	Qty	Uom
1	3040252	CIRCUIT BREAKER	1	EA
2	3044854	REPLACEMENT TERMINAL	1	EA
3	0071582	WIRE 12 R10I FKD8I 4.5	1	EA
4	3040624	RECEPTICAL GFCI OUTLET 20AMP-	1	EA
5	3040397	TERM SPADE8I 12/10	2	EA
6	3040691	CONN 90 .75 .50-.625	1	EA
7	0074368	CABLE, 110 V POWER TO PLATFORM - (USED ON ALUMINUM PLATFORMS ONLY)	1	EA
8	3040116	CONN .75 .500-.625	REF	EA
9	3040110	NUT LKG HUB .750 SAMEAS 962129	REF	EA
10	3044072	TERM BUTT CONN INSUL 12/10	2	EA
11	3044836	TERM R375I 12/10	1	EA
12	0074979	ELECTRICAL BOX DRILLED	1	EA
13	3040625	WEATHERPROOF PAD	1	EA
15	5569978	SCR HEXHD 8-32 .500 THD CTG	4	EA

Courtesy of Crane.Market

OPTIONS

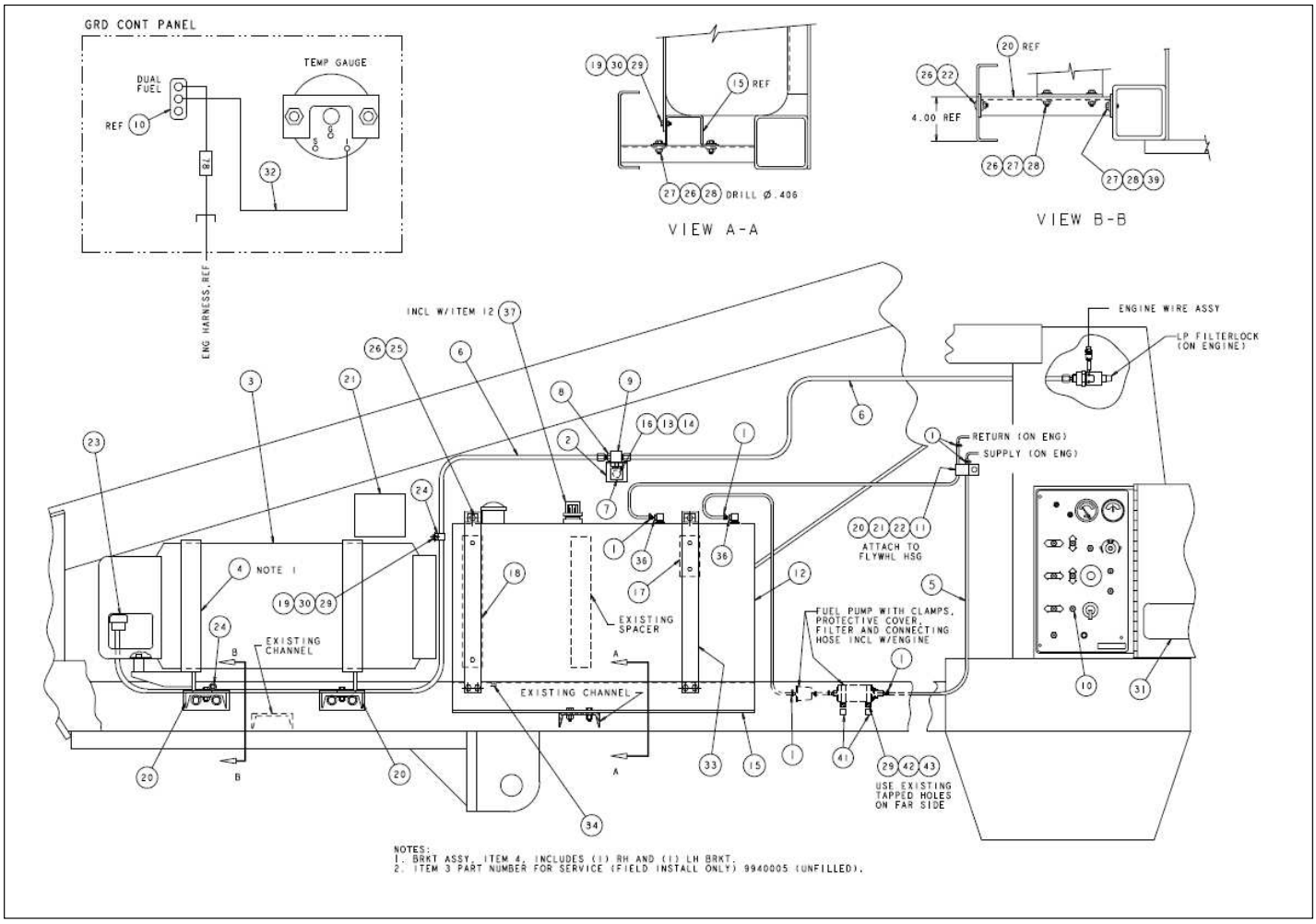

Courtesy of Crane.Market

Item	Part No.	Name	Qty	Uom
1	5550028	CLAMP	6	EA
2	0080668	MOUNTING BRACKET	1	EA
3	9940018	LP GAS CYLINDER	1	EA
4	0070969	BRACKET ASSEMBLY, LP CYLINDER	1	EA
5	5018831	HOSE FUEL INJECTION .313 ID	4 FT	EA
6	0090483	LP GAS FUELHOSE	2	EA
7	7630703	HYDROSTATIC RELIEF VALVE	1	EA
8	5090049	CONNECTOR	2	EA
9	7630704	BULKHEAD TEE	1	EA
10	3020013	SWITCH TOGGLE SPST ON OFF SEALED	1	EA
12	0070331	FUEL TANK 20 GALLON 2/GAGE	1	EA
Not Shown	9940001	FUEL TANK CAP – BEFORE SEPTEMBER 2010	1	EA
13	PNNA	WASHER FLAT .313	1	EA
14	PNNA	NUT LKG .313-18	1	EA
15	0080767	FUEL TANK SUPPORT DUAL FUEL	1	EA
16	PNNA	BOLT HEXHD .313-18 1.00 GR5	1	EA
17	0080766	SPACER TUBE DUAL FUEL	1	EA
18	0080326	SPACER TUBE	1	EA
19	PNNA	WASHER LOCK .250	12	EA
20	0083507	CHANNEL SUPPORT, LP GAS CYLINDER	2	EA
21	0081441	PLACARD, LIQUID WITHDRAWL	1	EA
22	PNNA	BOLT CRG .375-16 1.25 GR5	8	EA
23	0070974	COUPLER, FEMALE	1	EA
24	5093004	CLAMP	3	EA
25	PNNA	BOLT HEXHD .375-16 4.00 GR5	2	EA
26	PNNA	NUT LKG .375-16	14	EA

Courtesy of Crane.Market

Item	Part No.	Name	Qty	Uom
27	PNNA	BOLT HEXHD .375-16 1.25 GR5	8	EA
28	PNNA	WASHER FLAT .375	13	EA
29	PNNA	BLT HEXHD .250-20 .750 GR5	14	EA
30	PNNA	NUT HEX .250-20	12	EA
31	0090493	DECAL DUAL FUEL INSTRUCTIONS	1	EA
32	0140398	WIRE 16 R6I R10I 18	1	EA
33	0071940	FUEL TANK STRAP	2	EA
34	7714202	PIPE PLUG 1/4 NPT SQUARE HEAD	1	EA
36	5090032	ADAPTER, STRAIGHT BARBED	2	EA
37	0070483	GAUGE	REF	EA
38	5010011	HOSE SAE30R2-05 .312 FUEL	10 FT	EA
39	PNNA	WASHER LOCK .375	5	EA
41	5093004	CLAMP	2	EA
42	PNNA	WASHER FLAT .250	2	EA
43	PNNA	WASHER LOCK .250	2	EA
44	5093027	CLAMP	1	EA
45	PNNA	BLT HEXHD .375-16 X .50 LG GR5	1	EA

Courtesy of Crane.Market

OPTIONS

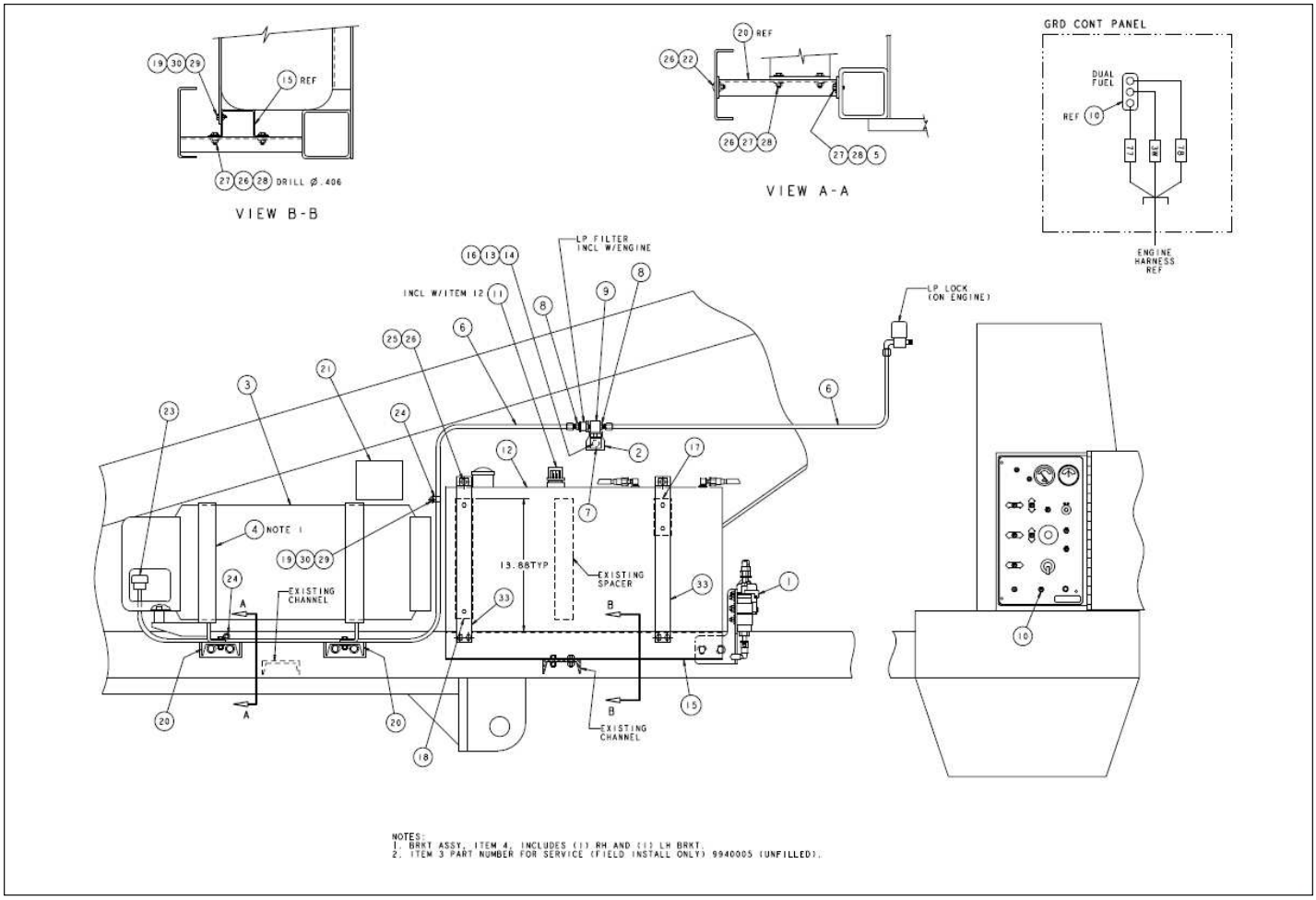

Courtesy of Crane.Market

Item	Part No.	Name	Qty	Uom
Not Shown	1	COUPLER FEMALE LPG 7141 F	1	EA
2	1	COUPLER FEMALE LPG 7141 F	1	EA
3	1	COUPLER FEMALE LPG 7141 F	1	EA
4	1	COUPLER FEMALE LPG 7141 F	1	EA
5	4	WASHER LOCK .375	4	EA
6	2	STRAP FUEL TANK	2	EA
7	1	COUPLER FEMALE LPG 7141 F	1	EA
8	2	STRAP FUEL TANK	2	EA
9	1	COUPLER FEMALE LPG 7141 F	1	EA
10	1	COUPLER FEMALE LPG 7141 F	1	EA
11	REF	FUEL GAUGE	REF	EA
12	1	COUPLER FEMALE LPG 7141 F	1	EA
13	1	COUPLER FEMALE LPG 7141 F	1	EA
14	1	COUPLER FEMALE LPG 7141 F	1	EA
15	1	COUPLER FEMALE LPG 7141 F	1	EA
16	1	COUPLER FEMALE LPG 7141 F	1	EA
17	1	COUPLER FEMALE LPG 7141 F	1	EA
18	1	COUPLER FEMALE LPG 7141 F	1	EA
19	12	NUT HEX .250-20	12	EA
20	2	STRAP FUEL TANK	2	EA
21	1	COUPLER FEMALE LPG 7141 F	1	EA
22	8	BLT CRG .375-16 1.25 GR5	8	EA
23	1	COUPLER FEMALE LPG 7141 F	1	EA
24	3	CLP CUSH .75	3	EA
25	2	STRAP FUEL TANK	2	EA
26	10	NUT LKG .375-16	10	EA
27	12	NUT HEX .250-20	12	EA
28	12	NUT HEX .250-20	12	EA
29	12	NUT HEX .250-20	12	EA

Courtesy of Crane.Market

Item	Part No.	Name	Qty	Uom
30	12	NUT HEX .250-20	12	EA
33	2	STRAP FUEL TANK	2	EA

Courtesy of Crane.Market

OPTIONS

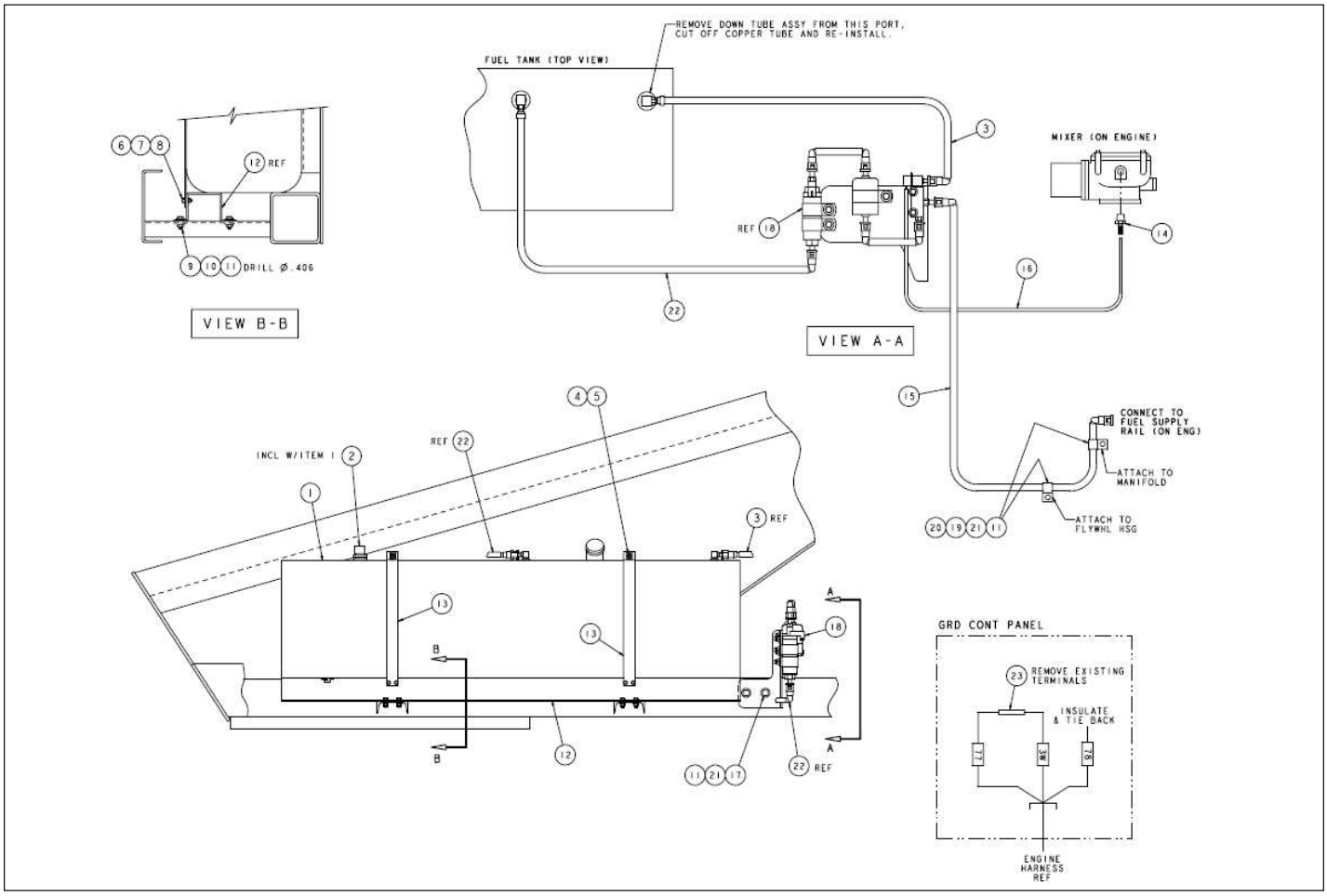

Courtesy of Crane.Market

Item	Part No.	Name	Qty	Uom
1	0084121	FUEL TANK 40 GAL T3 TB60	1	EA
2	0070483	GAUGE	REF	EA
3	0084132	HOSE ASSY, FUEL .38 ID X 20.00	1	EA
4	PNNA	BOLT HEXHD .375-16 4.00 GR5	2	EA
5	PNNA	NUT HEXHD .375-16 LKG	2	EA
6	PNNA	BLT HEXHD.250-20 .75 GR5	4	EA
7	PNNA	NUT HEXHD .250-20	4	EA
8	PNNA	WASHER LOCK .250 MDM	4	EA
9	PNNA	BLT HEXHD .375-16 1.25 GR5	8	EA
10	PNNA	NUT HEXHD .375-16 LKG	8	EA
11	PNNA	WASHER LOCK .375 MDM	12	EA
12	0080031	FUEL TANK SUPPORT	1	EA
13	0071940	FUEL TANK STRAP	2	EA
14	5098341	FTG ADAPTER BARBED-2H-4N BR	1	EA
15	0084133	HOSE ASSY, FUEL .38 ID X 60.00	1	EA
16	5010007	HOSE VACUUM .156 ID 4.0MM	6 FT	EA
17	PNNA	BLT HEXHD .375-16 X .75 GR5	2	EA
18	0084120	ASSY, FUEL PUMP	1	EA
19	PNNA	BLT HEXHD .375-16 X .50 LG GR5	2	EA
20	5093002	CLAMP	2	EA
21	PNNA	WASHER FLAT .38	4	EA
22	0084130	HOSE ASSY, FUEL .38 ID X 53.00	1	EA
23	3044070	TERM BUTT 22/18	1	EA

Courtesy of Crane.Market

OPTIONS

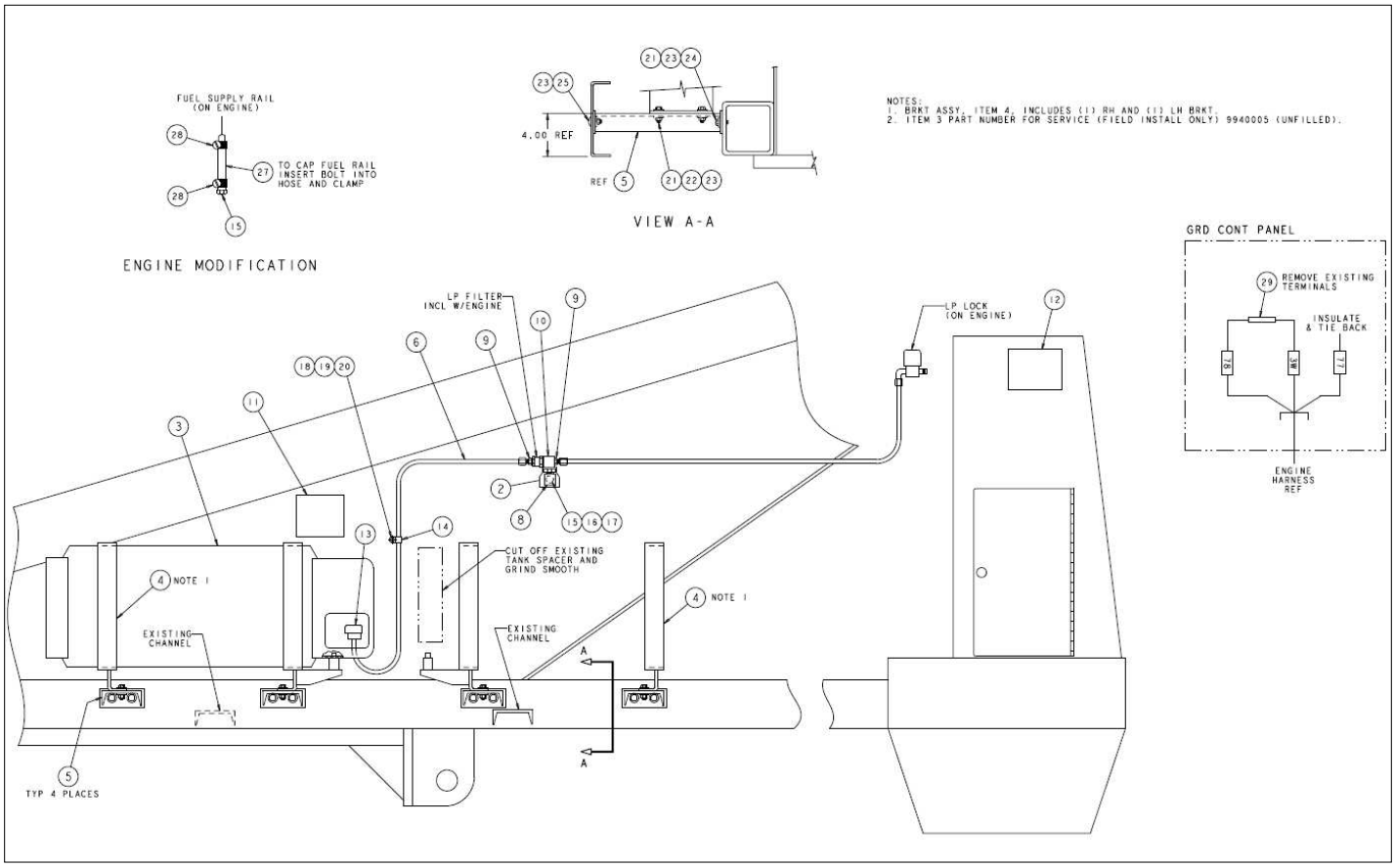

Courtesy of Crane.Market

Item	Part No.	Name	Qty	Uom
2	0080668	MOUNTING BRACKET	1	EA
3	9940018	LP GAS CYLINDER	1	EA
4	0070969	BRACKET ASSEMBLY, LP CYLINDER	2	EA
5	0083507	CHANNEL SUPPORT, LP GAS CYLINDER	4	EA
6	0080676	5/16 ID HOSE ASSEMBLY	1	EA
7	0101724	HOSE-5-6S45-4N 32 LPG	1	EA
8	7630703	HYDROSTATIC RELIEF VALVE	1	EA
9	5090049	CONNECTOR	2	EA
10	7630704	BULKHEAD TEE	1	EA
11	0081441	PLACARD, LIQUID WITHDRAWL	1	EA
12	0081377	DECAL LPS LOGO 4.0 X 4.0	1	EA
13	0070974	COUPLER, FEMALE	1	EA
14	5093004	CLAMP	3	EA
15	PNNA	BLT HEXHD .313-18 1.00 GR5	2	EA
16	PNNA	NUT LKG .313-18	1	EA
17	PNNA	WASHER FLAT .313	1	EA
18	PNNA	BLT HEXHD .250-20 .750 GR5	4	EA
19	PNNA	NUT HEXHD .250-20	4	EA
20	PNNA	WASHER LOCK .250 MDM	4	EA
21	PNNA	BLT HEXHD .375-16 1.25 GR5	8	EA
22	PNNA	NUT LKG .375-16	16	EA
23	PNNA	WASHER FLAT .375	16	EA
24	PNNA	WASHER LKG .375	8	EA
25	PNNA	BLT CRG .375 1.25 GR5	8	EA
26	564266	FTG ELB90 SAE45 -6LPG-4N BR	1	EA
27	5010011	HOSE SAE30R2-05 .312 FUEL	.16 FT	EA
28	5550028	CLAMP	2	EA
29	3044070	TERM BUTT 22/18	1	EA

Courtesy of Crane.Market

OPTIONS

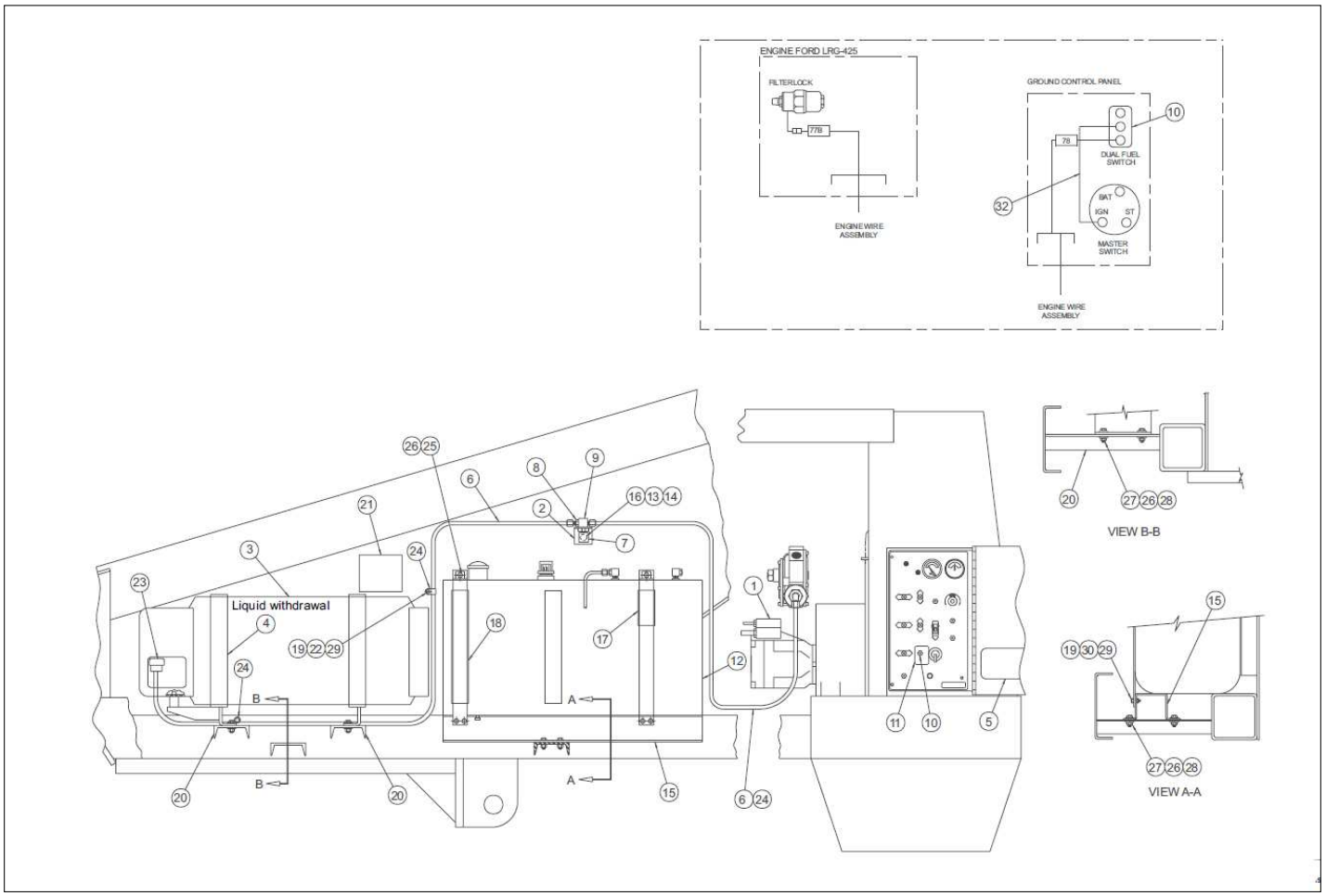

Courtesy of Crane.Market

Item	Part No.	Name	Qty	Uom
1	0112100	DUAL FUEL ENGINE, FORD LRG-425	1	EA
2	0080668	MOUNTING BRACKET	1	EA
3	9940005	LP GAS CYLINDER, LIQUID WITHDRAWAL 43.5 LB CAPACITY	1	EA
4	0070969	BRACKET ASSEMBLY, LP CYLINDER	1	EA
5	0090493	DECAL DUAL FUEL INSTRUCTIONS	1	EA
6	0090483	LP GAS FUELHOSE	2	EA
7	KIT ITEM	HYDROSTATIC RELIEF VALVE – INCLUDED IN DUAL FUEL KIT 0073444	1	EA
8	KIT ITEM	STRAIGHT THREAD ADAPTER 1/4 NPT BRASS – INCLUDED IN DUAL FUEL KIT 0073444	1	EA
9	KIT ITEM	BULKHEADTEE – INCLUDED IN DUAL FUEL KIT 0073444	1	EA
10	3020013	SWITCH TOGGLE SPST ON OFF SEALED	1	EA
11	0090492	PLACARD, DUAL FUEL SWITCH	1	EA
12	0070331	FUEL TANK 20 GALLON 2/GAGE	1	EA
Not Shown	9940001	FUEL TANK CAP – BEFORE SEPTEMBER 2010	1	EA
13	986269	WASHER 5/16 MEDIUM FLAT	1	EA
14	5560031	NUT HEX LKG .313-18	1	EA
15	0080767	FUEL TANK SUPPORT DUAL FUEL	1	EA
16	970369	CAPSCREW 5/16-18	1	EA
17	0080766	SPACER TUBE DUAL FUEL	1	EA
18	0080326	SPACER TUBE	1	EA
19	987099	WASHER LOCK .250	5	EA
20	0072135	CHANNEL SUPPORT	3	EA
21	0081441	PLACARD, LIQUID WITHDRAWL	1	EA

Courtesy of Crane.Market

Item	Part No.	Name	Qty	Uom
22	984069	NUT HEX .250-20	5	EA
23	0070974	COUPLER, FEMALE	1	EA
24	5093002	CLAMP	4	EA
25	970569	BLT HEXHD .375-16 3.50 GR5	2	EA
26	984109	NUT HEXHD .375-16	10	EA
27	972489	3/8-16NC 1 1/2 LARGE FLAT SOCKET HD	8	EA
28	986299	BOLT HEXHD .313-18 2.50 GR. 5	8	EA
29	970029	CAPSCREW 1/4-20 X 3/4 INCH LONG HEX HEAD GRADE 5	5	EA
30	0151815	WIRE 16 R10I R10I 12	1	EA

Courtesy of Crane.Market

OPTIONS

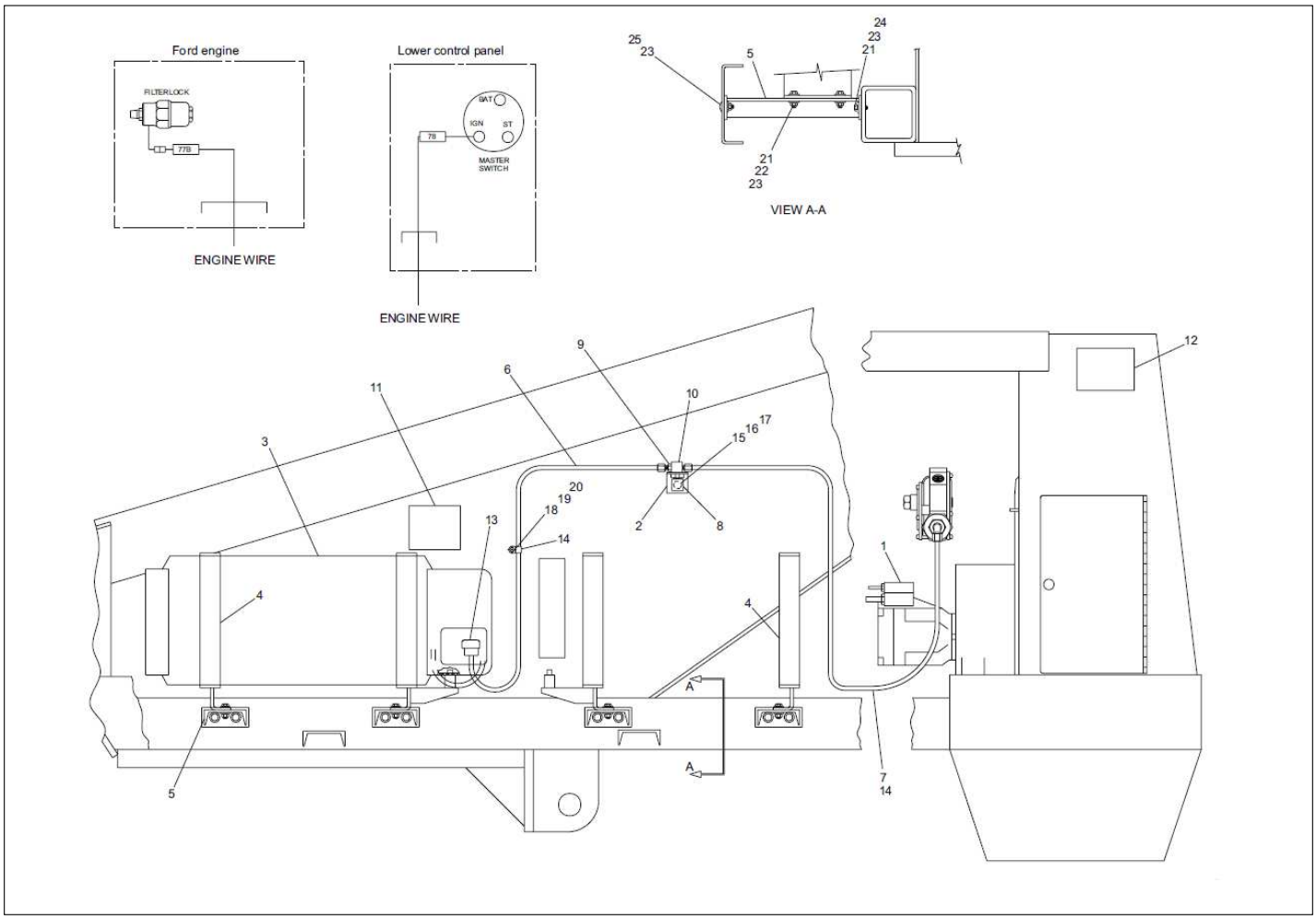

Courtesy of Crane.Market

Item	Part No.	Name	Qty	Uom
1	0112100	DUAL FUEL ENGINE, FORD LRG-425	1	EA
2	0080668	MOUNTING BRACKET	1	EA
3	9940005	LP GAS CYLINDER, LIQUID WITHDRAWAL 43.5 LB CAPACITY	1	EA
4	0070969	BRACKET ASSEMBLY, LP CYLINDER	1	EA
5	0083507	CHANNEL SUPPORT, LP GAS CYLINDER	4	EA
6	0080676	5/16 ID HOSE ASSEMBLY	1	EA
7	0090483	LP GAS FUELHOSE	1	EA
8	KIT ITEM	HYDROSTATIC RELIEF VALVE – INCLUDED IN DUAL FUEL KIT 0073444	1	EA
9	KIT ITEM	STRAIGHT THREAD ADAPTER 1/4 NPT BRASS – INCLUDED IN DUAL FUEL KIT 0073444	1	EA
10	KIT ITEM	BULKHEAD TEE – INCLUDED IN DUAL FUEL KIT 0073444	1	EA
11	0081441	PLACARD, LIQUID WITHDRAWL	1	EA
12	0081377	DECAL LPS LOGO 4.0 X 4.0	1	EA
13	0070974	COUPLER, FEMALE	1	EA
14	5093004	CLAMP	4	EA
15	970369	CAPSCREW 5/16-18	1	EA
16	5560031	NUT HEX LKG .313-18	1	EA
17	986269	WASHER 5/16 MEDIUM FLAT	1	EA
18	970029	CAPSCREW 1/4-20 X 3/4 INCH LONG HEX HEAD GRADE 5	4	EA
19	984069	NUT HEX .250-20	4	EA
20	987099	WASHER LOCK .250	4	EA
21	970419	BOLT HEXHD .375-16 1.25 GR. 5	8	EA
22	5560033	NUT HEXHD .375-16 LKG	16	EA

Courtesy of Crane.Market

Item	Part No.	Name	Qty	Uom
23	986299	BOLT HEXHD .313-18 2.50 GR. 5	16	EA
24	987119	BOLT HEXHD .375-16 1.75 GR. 5	8	EA
25	972439	BOLT CRG .375-16 1.25	8	EA

Courtesy of Crane.Market

OPTIONS

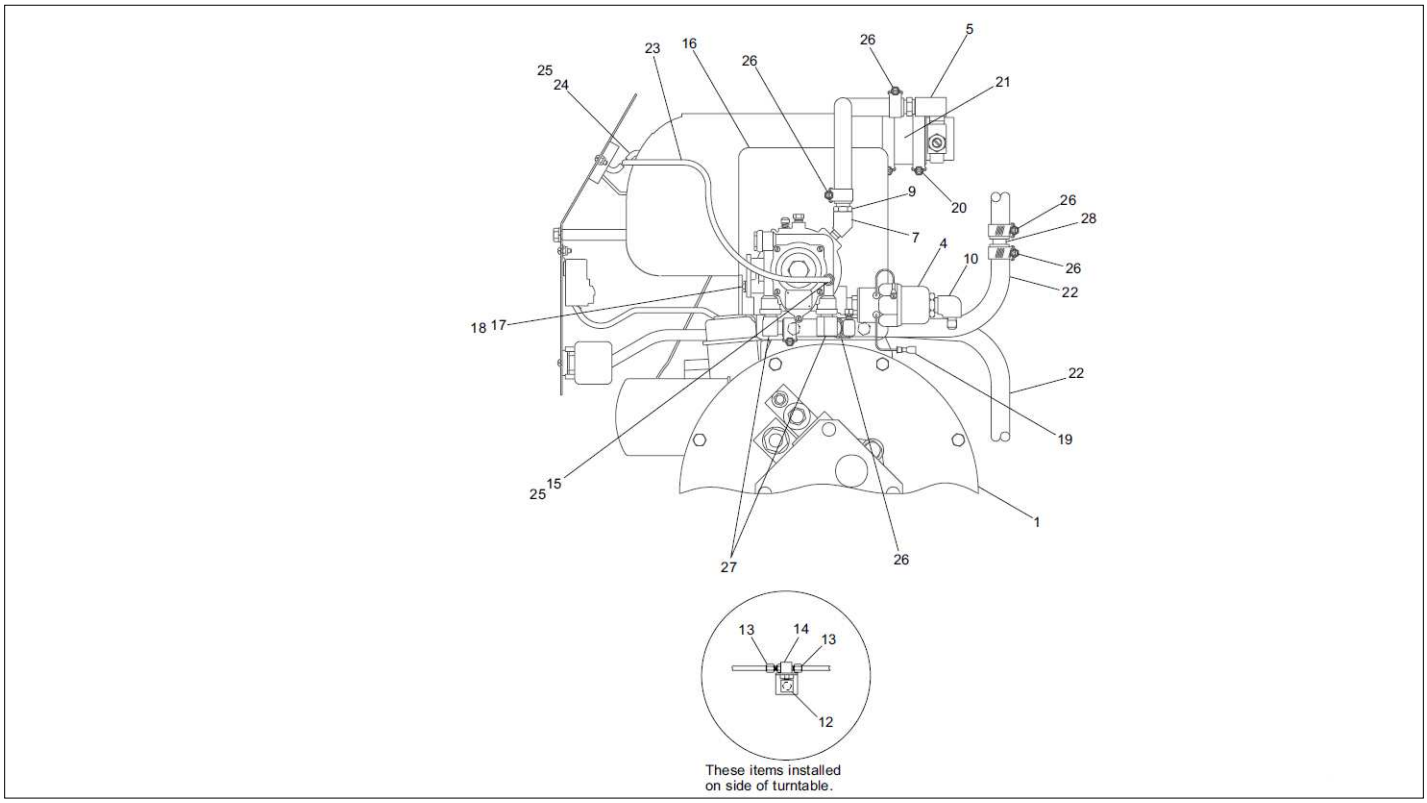

Courtesy of Crane.Market

Item	Part No.	Name	Qty	Uom
Not Shown	0112100	DUAL FUEL ENGINE, FORD LRG-425	1	EA
1	0112083	ENGINE, FORD LRG-425	1	EA
2	0073444	DUAL FUEL KIT, LIQUID COOLED – INCLUDES ITEMS 5 THROUGH 14	1	EA
3	8020009	REGULATOR	1	EA
4	8020036	FILTER LOCK	1	EA
5	KIT ITEM	HOSE ADAPTER – ITEM NOT SOLD SEPARATELY	1	EA
6	KIT ITEM	LP HOSE, 5/8 INCH DIAMETER X 24 INCH LONG – NOT SOLD SEPARATELY	1	EA
7	KIT ITEM	STREET 3/8 NPT 90° ELBOW, BRASS – NOT SOLD SEPARATELY	2	EA
8	KIT ITEM	STREET 1/4 NPT 90° ELBOW, BRASS – NOT SOLD SEPARATELY	2	EA
9	KIT ITEM	CONNECTOR 3/8 NPT TO 5/8INCH HOSE, BRASS – NOT SOLD SEPARATELY	2	EA
10	KIT ITEM	MALE 1/4 NPT TO -6 SAE 90° ELBOW, BRASS – NOT SOLD SEPARATELY	1	EA
11	KIT ITEM	STREET TEE 1/8 NPT BRASS – NOT SOLD SEPARATELY	1	EA
12	KIT ITEM	HYDROSTATIC RELIEF VALVE – NOT SOLD SEPARATELY	1	EA
13	KIT ITEM	STRAIGHT THREAD ADAPTER1/4NPTBRASS – NOT SOLD SEPARATELY	2	EA
14	KIT ITEM	BULKHEAD TEE – NOT SOLD SEPARATELY	1	EA
15	5090024	VACUUM FITTING 1/8 NPT BRASS STRAIGHT	1	EA
16	0111862	MOUNT PLATE	1	EA
17	970029	CAPSCREW 1/4-20 X 3/4 INCH LONG HEX HEAD GRADE 5	2	EA

Courtesy of Crane.Market

Item	Part No.	Name	Qty	Uom
18	987099	WASHER LOCK .250	2	EA
19	3040083	TERM FEM250FI 16/14	1	EA
20	5550030	CLAMP	2	EA
21	7630327	HOSE 2 INCH FLAME RESISTANT X 2 INCH LONG	1	EA
22	5010020	EMISSION CONTROL HOSE 5/8 INCH DIAMETER	1	EA
23	5010007	HOSE VACUUM .156 ID 4.0MM	1	EA
24	5090044	VACUUM LINE TEE	1	EA
25	5090026	CLP HOSE .187 SPRING (VACUUM)	1	EA
26	5550010	CLAMP	6	EA
27	5039501	BEADED 90° ELBOW	2	EA
28	5039601	SPLICE	1	EA
29	3020054	VACUUM SWITCH – INCLUDED WITH ITEM 1	1	EA
Not Shown	8130005	REPLACEMENT SWITCH	1	EA

Courtesy of Crane.Market

OPTIONS

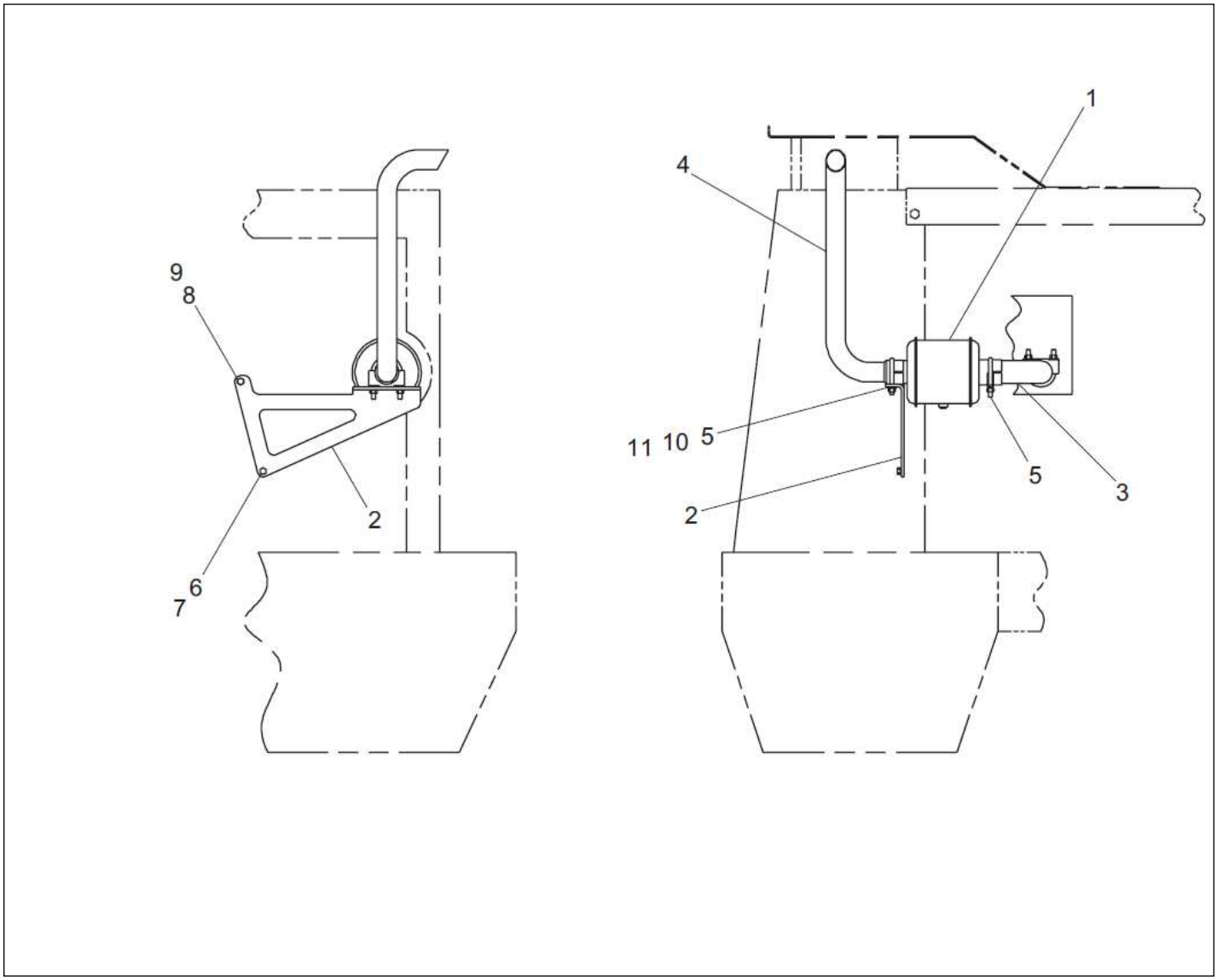

Courtesy of Crane.Market

Item	Part No.	Name	Qty	Uom
1	7630243	MUFFLER, SPARK ARRESTOR	1	EA
2	0082096	TAILPIPE BRACE	1	EA
3	0082097	EXHAUST PIPE	1	EA
4	0082098	TAILPIPE	1	EA
5	5550014	2" EXHAUST CLAMP	2	EA
6	5560625	BOLT 10MM- 1.50P 20MM	1	EA
7	5560356	WASHER LOCK M10	1	EA
8	972029	CAPSCREW METRIC M8-1.25 X 20MM LONG HEX HEAD	1	EA
9	5560355	WASHER LOCK M8	1	EA
10	987109	WASHER LOCK .313	2	EA
11	986269	WASHER 5/16 MEDIUM FLAT	2	EA

Courtesy of Crane.Market

OPTIONS

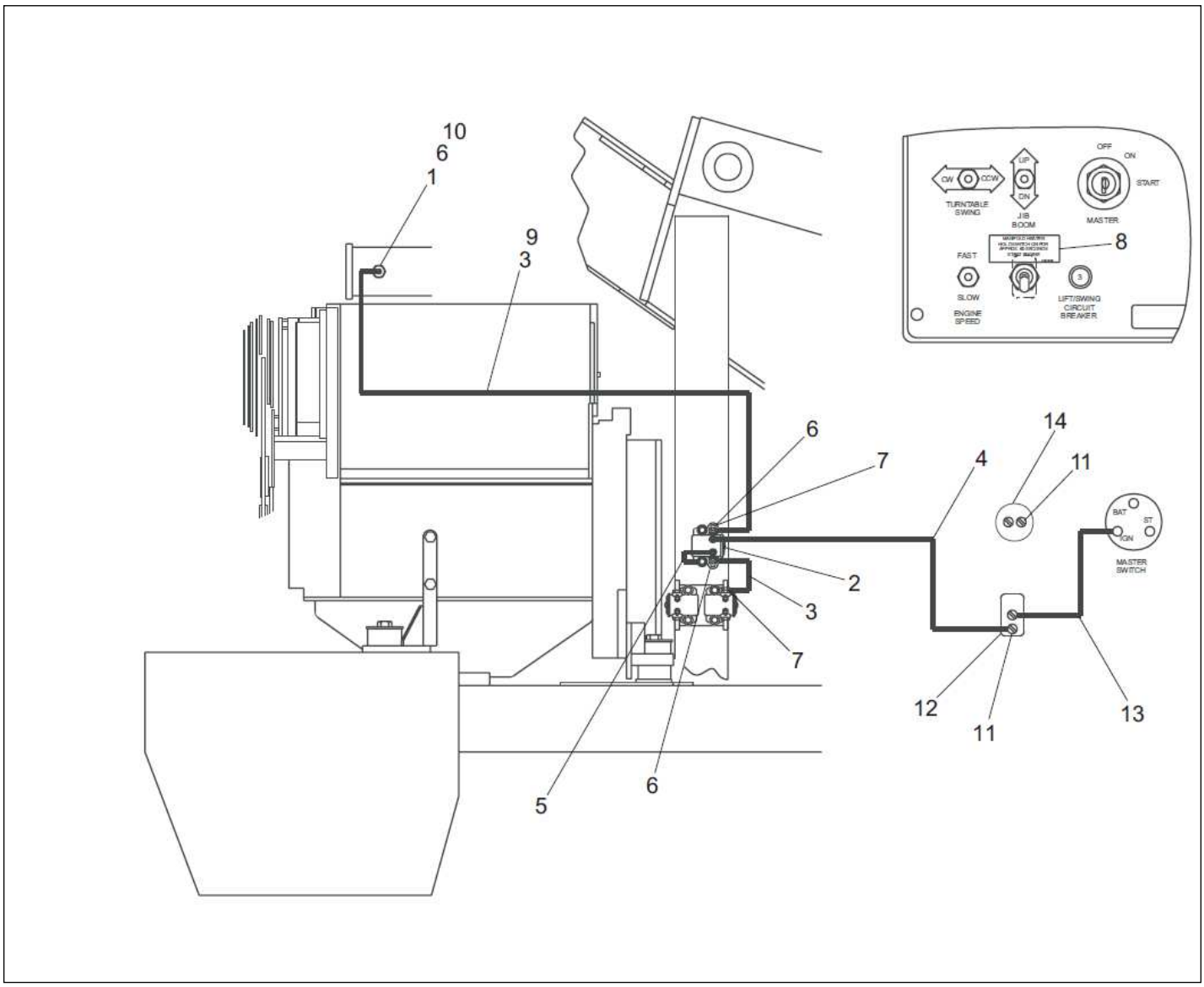

Courtesy of Crane.Market

Item	Part No.	Name	Qty	Uom
1	7630215	AIR INLET HEATER KIT	1	EA
Not Shown	8040135	REPLACEMENT GLOW PLUG	1	EA
2	3040506	SOLENOID	1	EA
3	3011001	WIRE 10GA SINGLE COND WHITE	1	EA
4	3011601	WIRE 16GA SINGLE CONDUCTOR BLK-TYPE GPT	1	EA
5	0071568	WIRE 12 R10I R250I 4	1	EA
6	3040268	BOOT	3	EA
7	3040161	TERM R312I 8	3	EA
8	0082064	PLACARD	1	EA
9	3090006	TUBE FLEXGARD .350 ID	1	EA
10	3042263	TERMINAL #10 STUD INSULATED 8 GAUGE WIRE	1	EA
11	3044142	TERM R6I 22/18-PN18-6R-M	1	EA
12	3020080	SWITCH TOGGLE SPDT MOM/ON	1	EA
13	0073781	JUMPER WIRE	1	EA
14	3026027	SW PUSH BUTTON	1	EA

Courtesy of Crane.Market

OPTIONS

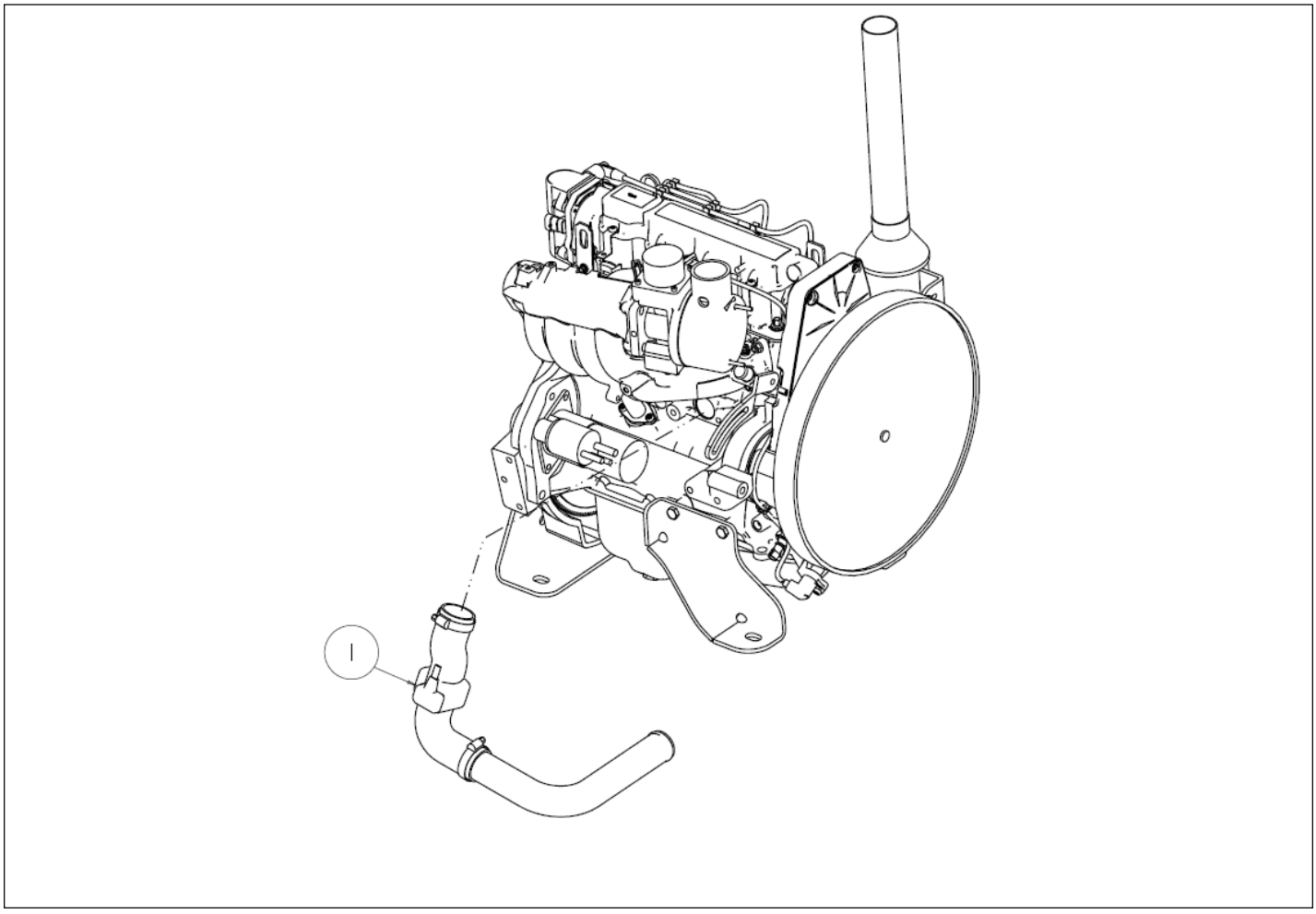

Courtesy of Crane.Market

Item	Part No.	Name	Qty	Uom
Not Shown	0082043	OPT WARM-UP WITH SIMPLIFIED HYDRAULICS	1	EA
Not Shown	0163407	COLD WEATHER START-GM	1	EA
1	7630842	HEATER, LOWER RADIATOR HOSE ID 1.75 – 120V, 600W	1	EA
Not Shown	PNNA	HOSE CLAMPS – PROVIDED WITH HEATER	2	EA

Courtesy of Crane.Market

OPTIONS

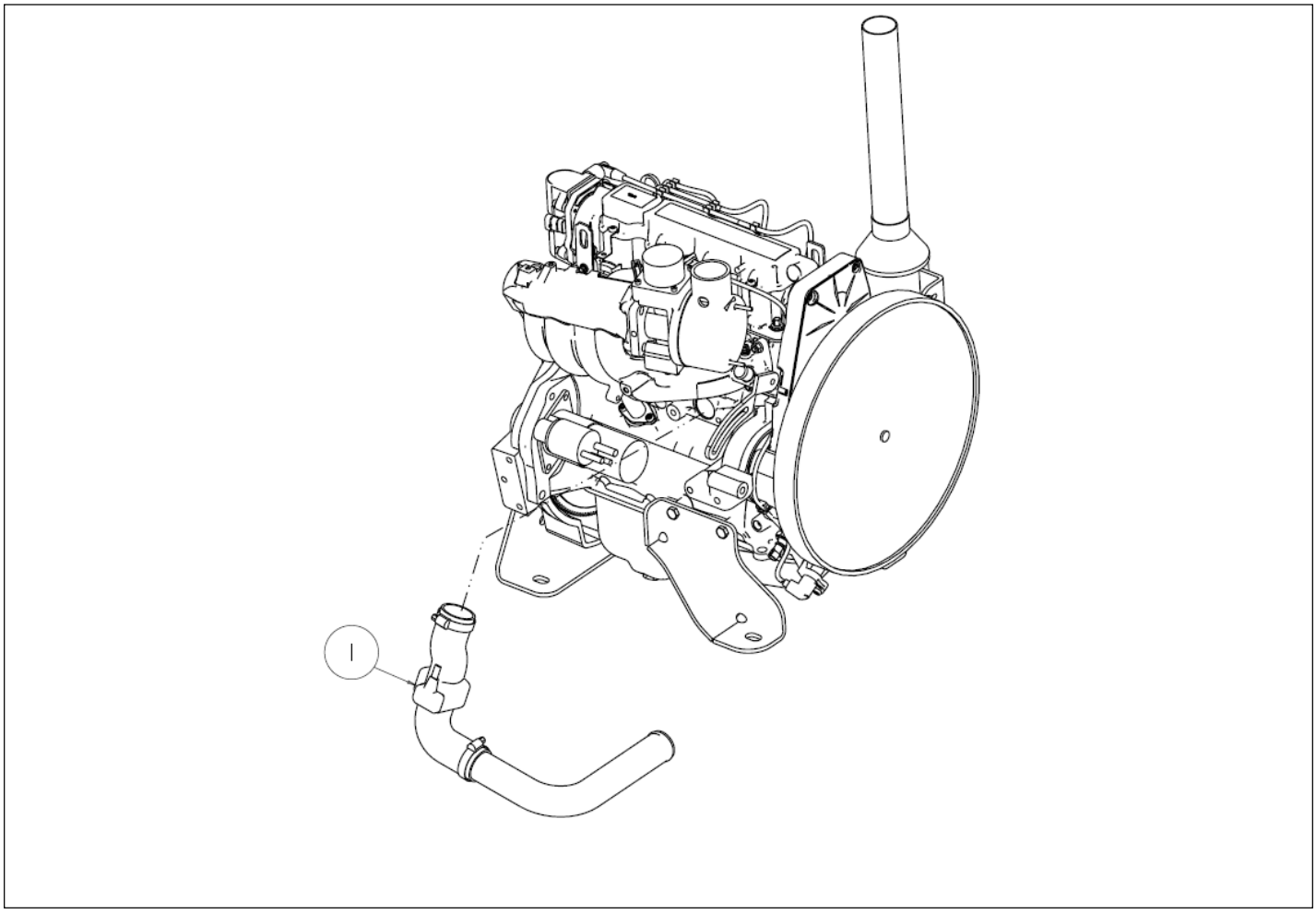

Courtesy of Crane.Market

Item	Part No.	Name	Qty	Uom
Not Shown	0082043	OPT WARM-UP WITH SIMPLIFIED HYDRAULICS	1	EA
Not Shown	0163407	COLD WEATHER START-GM	1	EA
1	7630842	HEATER, LOWER RADIATOR HOSE ID 1.75 – 120V, 600W	1	EA
Not Shown	PNNA	HOSE CLAMPS – PROVIDED WITH HEATER	2	EA
2	0190086	SYNTHETIC HYDR OILF/COLD WTHR – ITEM NOT SHOWN	35 GAL	EA
3	3050102	BATTERY WARMER – ITEM NOT SHOWN	2	EA

Courtesy of Crane.Market

OPTIONS

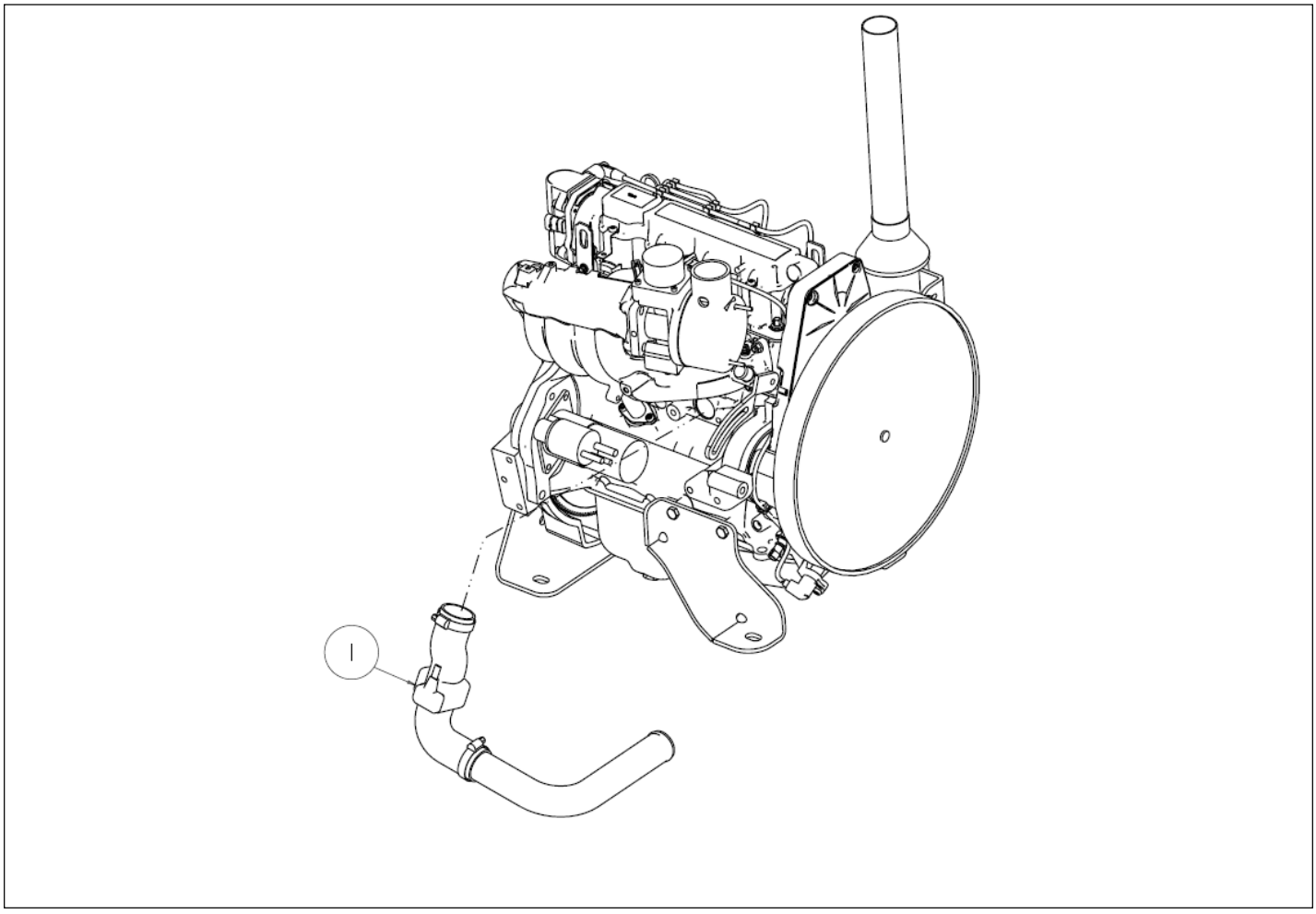

Courtesy of Crane.Market

Item	Part No.	Name	Qty	Uom
1	0082043	OPT WARM-UP WITH SIMPLIFIED HYDRAULICS	1	EA
2	0190086	SYNTHETIC HYDR OILF/COLD WTHR – ITEM NOT SHOWN	35 GAL	EA
3	3050102	BATTERY WARMER – ITEM NOT SHOWN	1	EA
4	104869-000	BLOCK HEATER KUBOTA V2403T	1	EA
5	0181634	DECAL ENGINE BLOCK HEATER	1	EA
6	3050102	BATTERY WARMER – ITEM NOT SHOWN	1	EA
7	3050002	BATTERY	1	EA
8	3050004	BATTERY HOLDDOWN BOLT	2	EA
9	3050008	BATTERY HOLDDOWN	1	EA
10	0075268	WIRE 2/0 R375 R375 13 BLK	1	EA
11	0080484	WIRE 2/0 R375 R375 13 RED	1	EA
12	5560031	NUT HEX LKG .313-18	2	EA
13	986269	WASHER 5/16 MEDIUM FLAT	2	EA

Courtesy of Crane.Market

OPTIONS

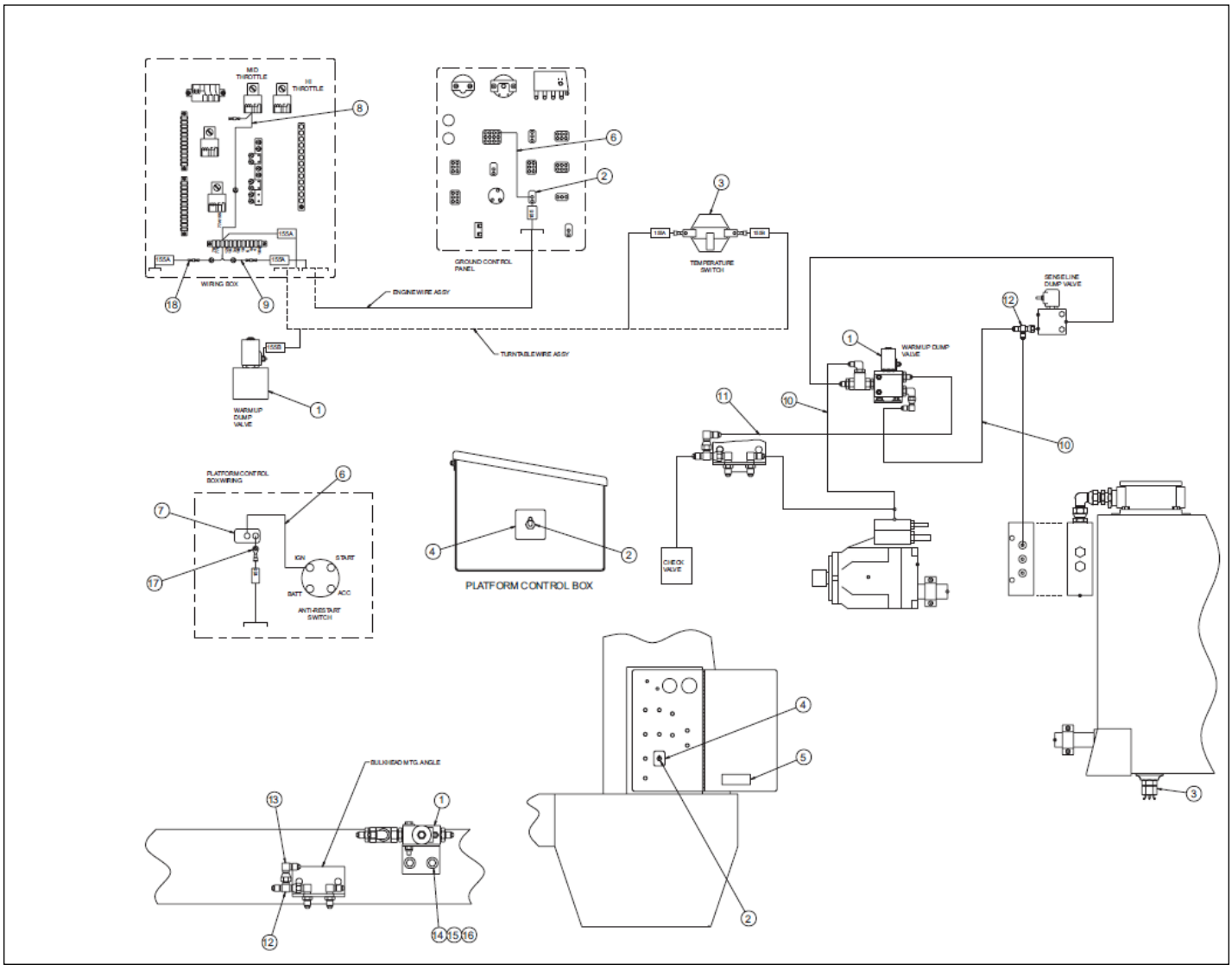

Courtesy of Crane.Market

Item	Part No.	Name	Qty	Uom
1	0082053	HYDRAULIC WARM-UP VALVE	1	EA
2	3020013	SWITCH TOGGLE SPST ON OFF SEALED	1	EA
3	3020078	TEMPERATURE SWITCH	1	EA
4	0071792	PLACARD, WARM-UP SWITCH	1	EA
5	0071793	DECAL, HYDRAULIC WARM-UP INSTRUCTIONS	1	EA
6	0071844	JUMPER WIRE	2	EA
7	3040047	TERM FEM250FI 22/18	1	EA
8	0181398	DIODE JUMPER WIRE	1	EA
9	0181285	DIODE JUMPER WIRE	1	EA
10	0050137	HOSE -4-4S-4S 36	1	EA
11	0020283	HOSE -4-4S-4S 15.25 100R2	2	EA
12	5036703	SWIVEL NUT RUN TEE	2	EA
13	5037003	SWIVEL NUT 90° ELBOW	1	EA
14	970029	CAPSCREW 1/4-20 X 3/4 INCH LONG HEX HEAD GRADE 5	2	EA
15	987099	WASHER LOCK .250	2	EA
16	986019	WASHER FLAT .250	2	EA
17	3044142	TERM R6I 22/18-PN18-6R-M	1	EA
18	3040047	TERM FEM250FI 22/18	1	EA

Courtesy of Crane.Market

OPTIONS

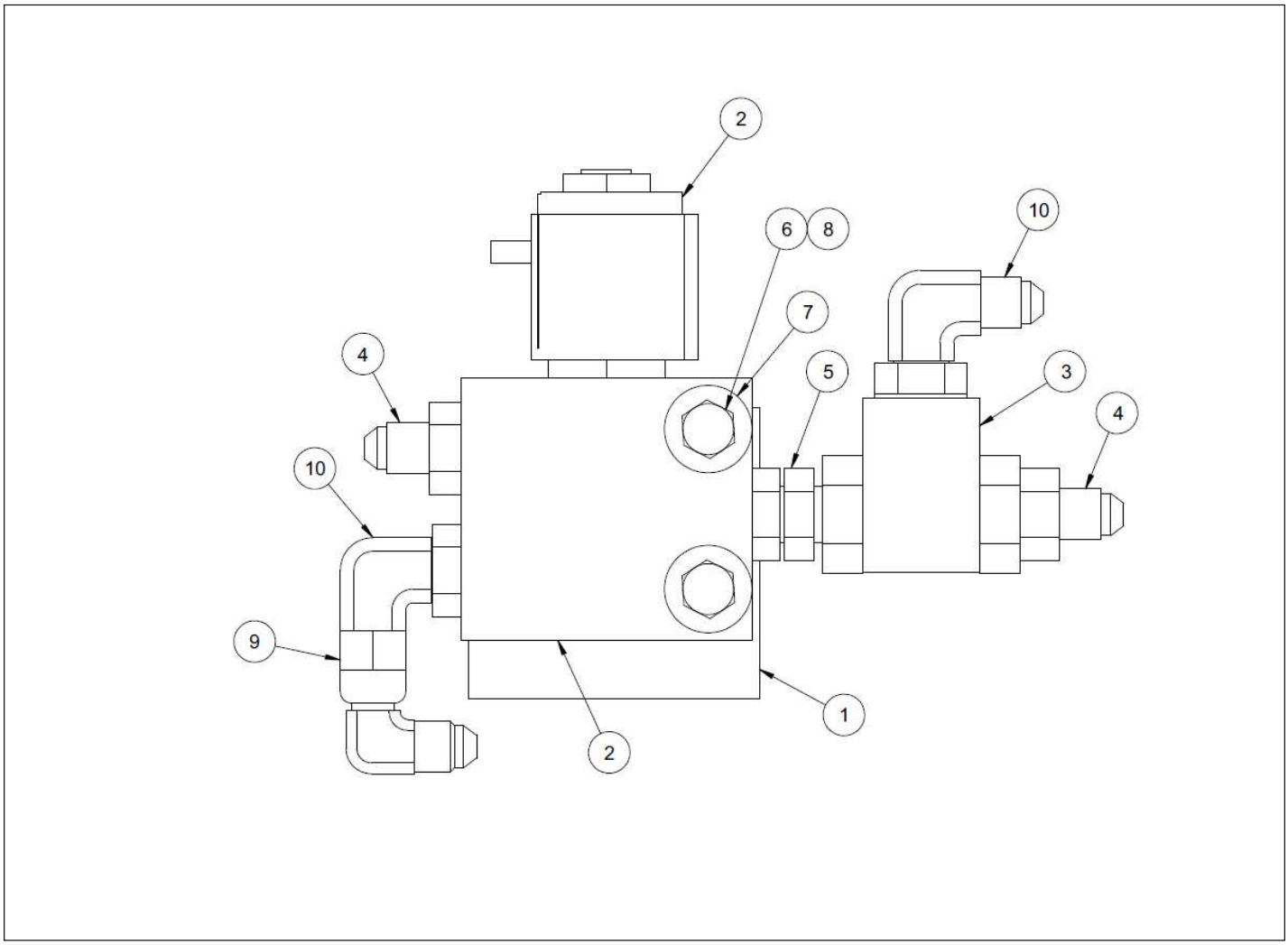

Courtesy of Crane.Market

Item	Part No.	Name	Qty	Uom
1	0071805	BRACKET MOUNTING	1	EA
2	6010499	SOLENOID VALVE	1	EA
3	6010083	SHUTTLE VALVE	1	EA
4	5065705	FTG, ADAPTER STRTHD -6B-4S STL	2	EA
5	5076301	UNION	1	EA
6	970169	BLT HEXHD .250-20 2.00 GR5	2	EA
7	986019	WASHER FLAT .250	2	EA
8	5560004	NUT HEXHD .250-20 LKG	2	EA
9	5037003	SWIVEL NUT 90° ELBOW	1	EA
10	5035318	FTG. ELB90STRTHD-6B-4S	2	EA

Courtesy of Crane.Market

OPTIONS

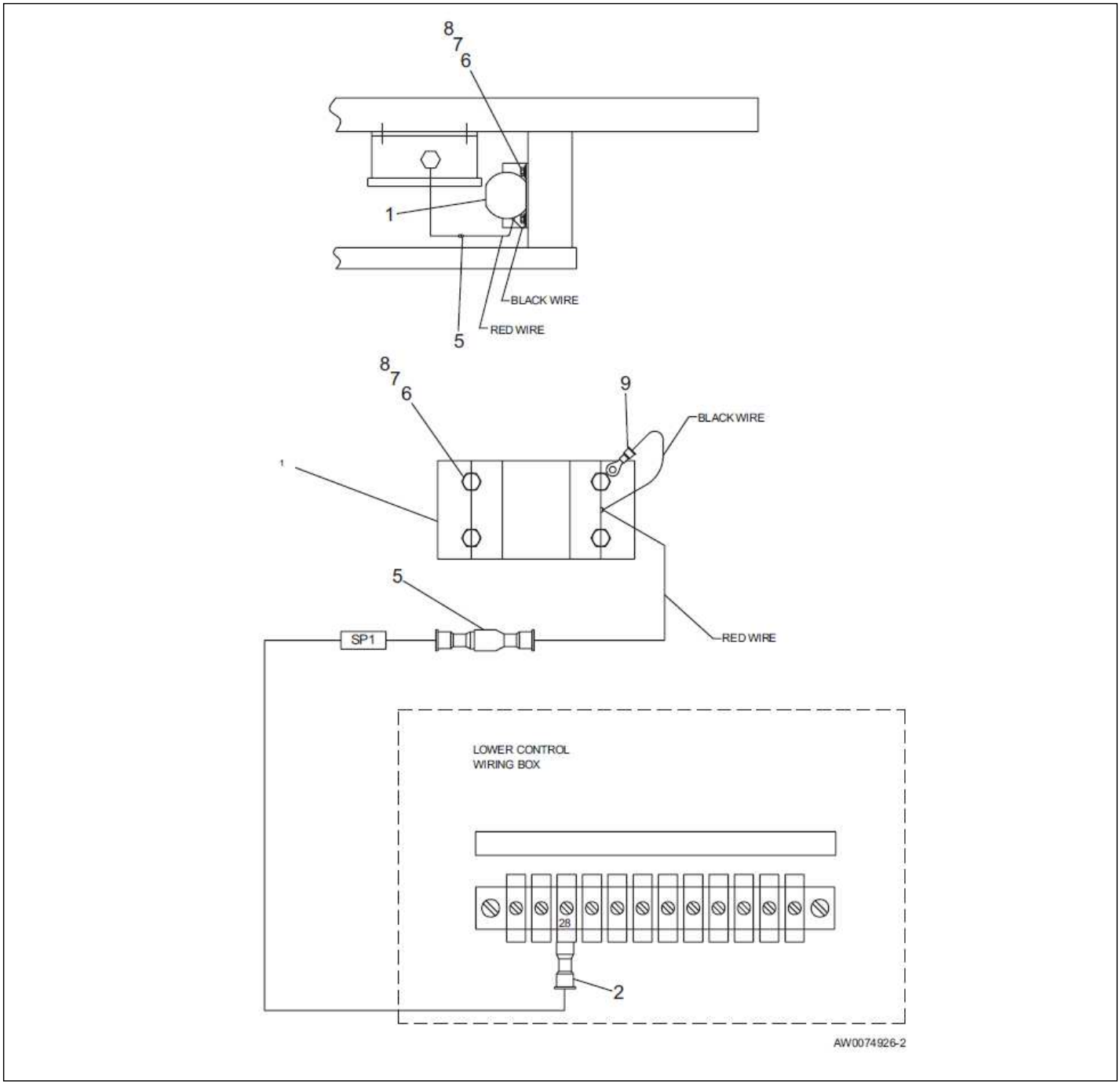

Courtesy of Crane.Market

Item	Part No.	Name	Qty	Uom
1	3040129	ALARM	1	EA
2	3046697	TERM FEM188I 16/14GA	1	EA
3	3040082	TERM MALE250FI 16/14	1	EA
4	970029	CAPSCREW 1/4-20 X 3/4 INCH LONG HEX HEAD GRADE 5	4	EA
5	987099	WASHER LOCK .250	4	EA
6	986019	WASHER FLAT .250	4	EA
7	3044162	TERM, 1/4 STUD INS. 16/14 WIRE	1	EA

Courtesy of Crane.Market

OPTIONS

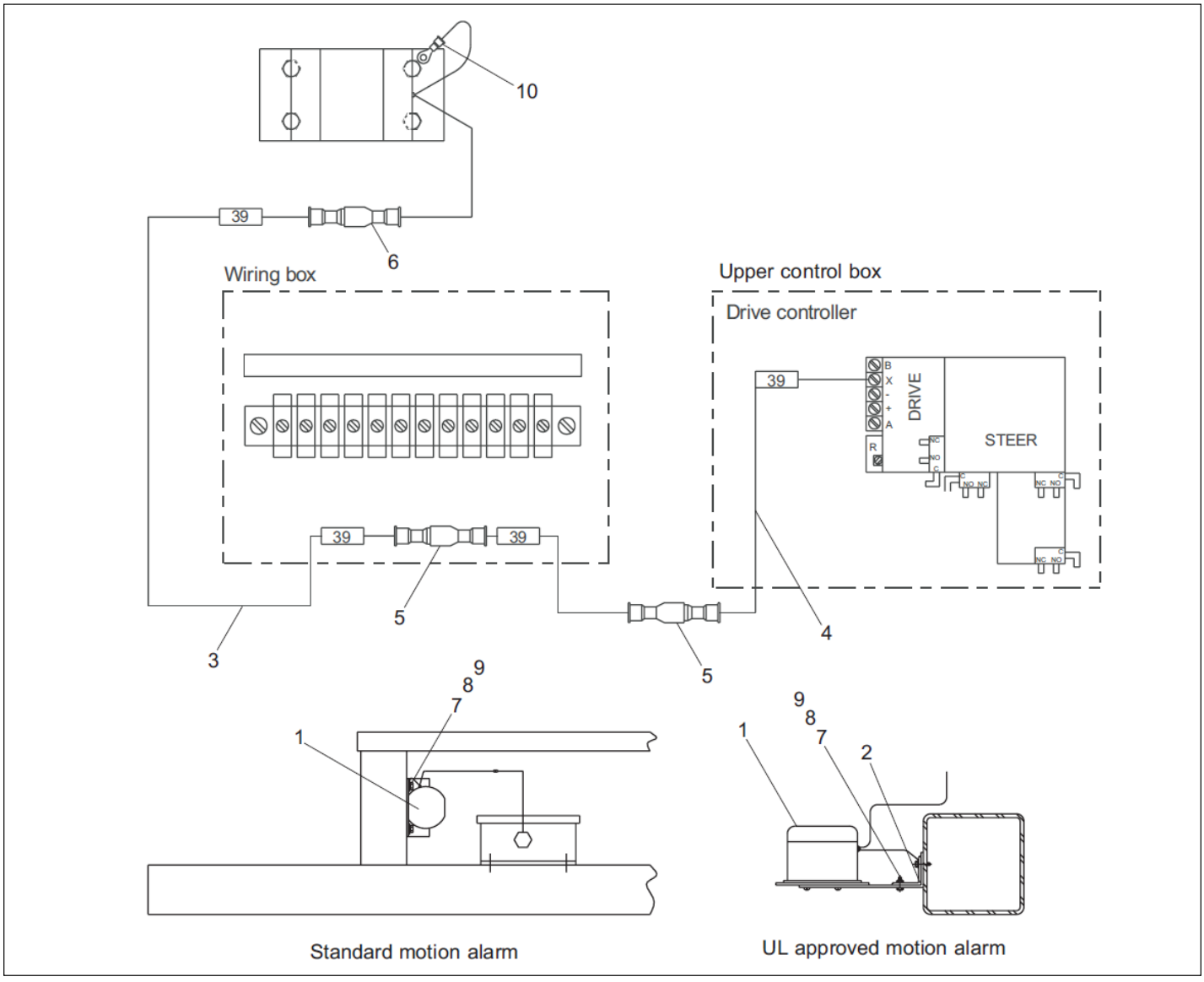

Courtesy of Crane.Market

Item	Part No.	Name	Qty	Uom
1	3040129	ALARM	1	EA
Not Shown	3040462	MOTION WARNING ALARM, UL APPROVED	1	EA
2	0081422	MOUNT ANGLE - (USED WITH UL APPROVED WARNING ALARM ONLY)	1	EA
3	0073642	WIRE 16 FEM250I FEM250I 10	1	EA
4	0073071	WIRE 18 R6I FEM250FI 28	1	EA
5	3040046	TERM, .250 MALE SLIP-ON F.I. 22/18 WIRE	2	EA
6	3040082	TERM MALE250FI 16/14	1	EA
7	970029	CAPSCREW 1/4-20 X 3/4 INCH LONG HEX HEAD GRADE 5	4	EA
8	987099	WASHER LOCK .250	4	EA
9	986019	WASHER FLAT .250	4	EA
10	3044162	TERM, 1/4 STUD INS. 16/14 WIRE	1	EA

Courtesy of Crane.Market

OPTIONS

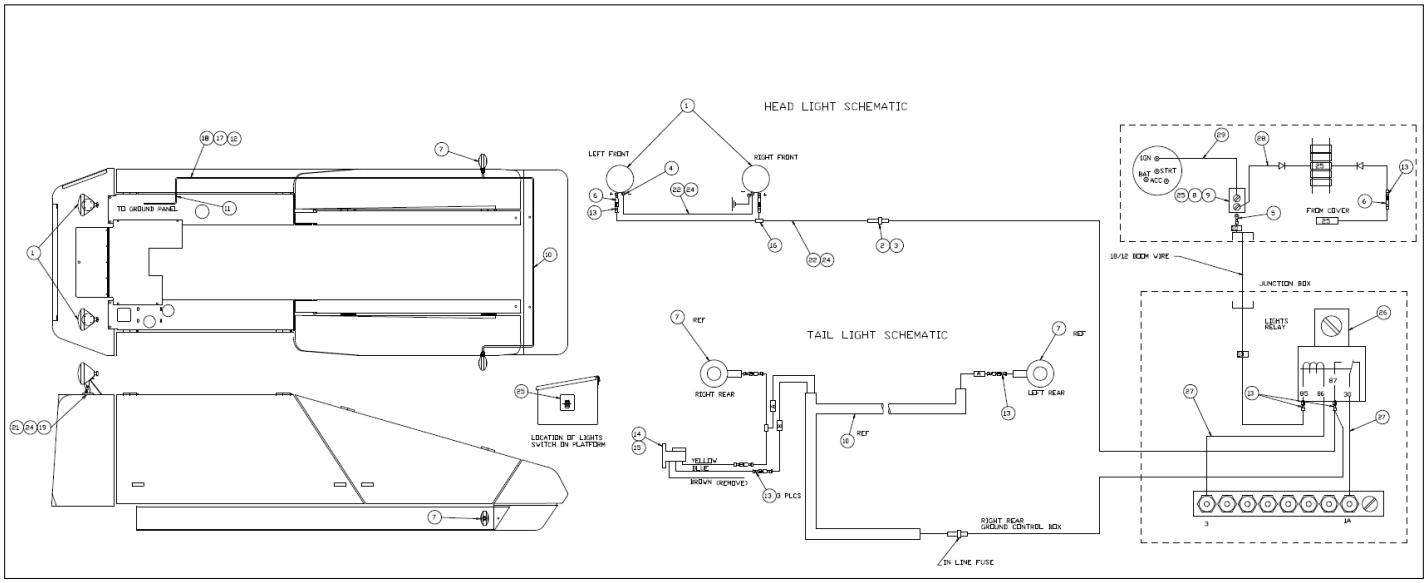

Courtesy of Crane.Market

Item	Part No.	Name	Qty	Uom
1	3064414	FLOOD LIGHT	2	EA
2	3040038	FUSE HOLDER, IN LINE, BUSS HRK	1	EA
3	3040039	FUSE, 10 AMP (1/4 X 1/4) BUSS AGC	1	EA
4	3044161	TERM R10I 16/14	3	EA
5	3044158	TERM R6I 16/14	1	EA
6	3040082	TERM MALE250FI 16/14	3	EA
7	3060017	TURN SIGNAL LIGHT DBL FACE LENS	2	EA
8	3020013	SWITCH TOGGLE SPST ON OFF SEALED	1	EA
9	3040009	SW BOOT SHORT	1	EA
10	0074779	WIRING HARNESS TAIL LIGHTS	1	EA
11	3040113	MOUNTING BASE	1	EA
12	5093002	CLAMP	3	EA
13	3040083	TERM FEM250FI 16/14	9	EA
14	3060019	FLASHER	1	EA
15	3060018	FLASHER BASE	1	EA
16	3044071	TERM BUTT CONN INSUL 16/14	1	EA
17	970029	CAPSCREW 1/4-20 X 3/4 INCH LONG HEX HEAD GRADE 5	3	EA
18	987099	WASHER LOCK .250	3	EA
19	5560034	NUT HEX LKG 10-24	10	EA
20	974679	MACHINE SCREW, RND HD, SLOTTED, #10-24 UNC X .625 MTS 16, 18	2	EA
21	974709	SCREW RHD #10-24 X 1 PLATED	8	EA
22	3090006	TUBE FLEXGARD .350 ID	10 FT	EA
23	3011601	WIRE 16GA SINGLE CONDUCTOR BLK-TYPE GPT	10 FT	EA
24	986009	FLAT WASHER #10	8	EA

Courtesy of Crane.Market

Item	Part No.	Name	Qty	Uom
25	0181376	PLAC LIGHTS ON/OFF SW	1	EA
26	3040469	RELAY SPDT 12V 30AMP SONG	1	EA
27	0072418	JUMPER WIRE	2	EA
28	0073250	WIRE 18 R101 FEM1881 17 DIO	2	EA
29	0070758	WIRE 16 R6I R10I 20	1	EA

Courtesy of Crane.Market

OPTIONS

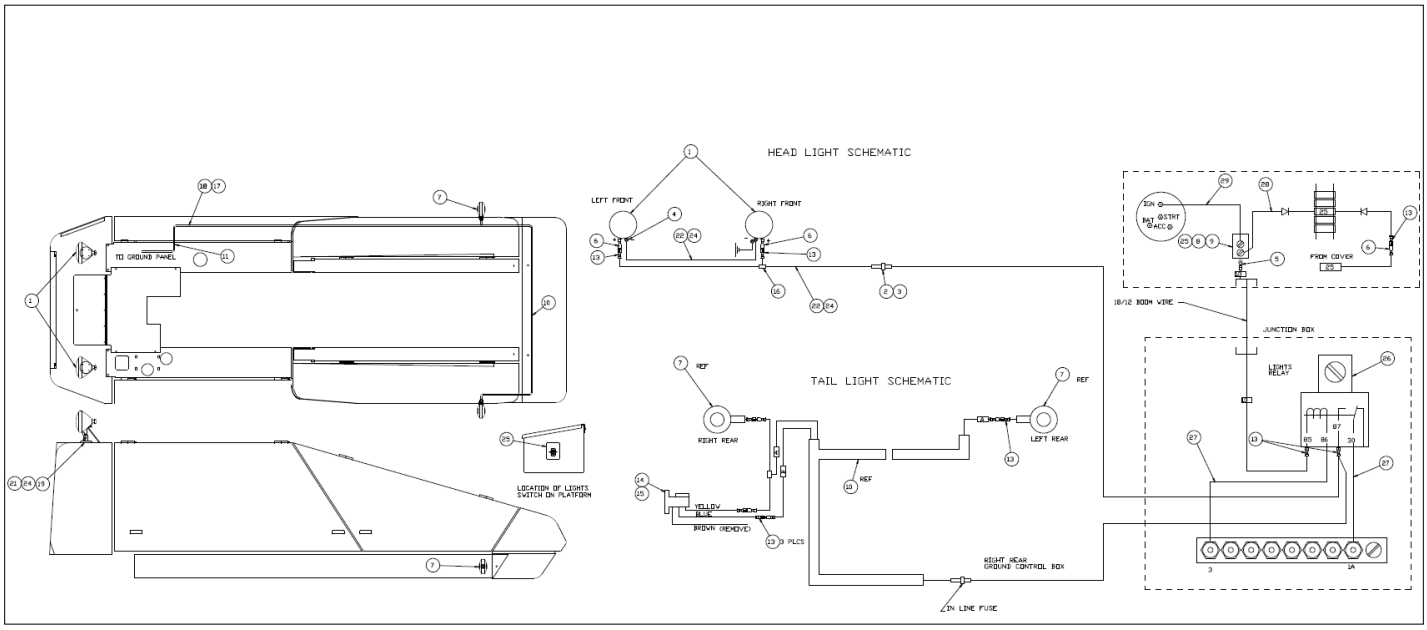

Courtesy of Crane.Market

Item	Part No.	Name	Qty	Uom
1	3067619	HALOGEN FLOOD LIGHT	2	EA
2	3040038	FUSE HOLDER, IN LINE, BUSS HRK	1	EA
3	3040039	FUSE, 10 AMP (1/4 X 1/4) BUSS AGC	1	EA
4	3044161	TERM R10I 16/14	3	EA
5	3044158	TERM R6I 16/14	1	EA
6	3040082	TERM MALE250FI 16/14	3	EA
7	3060017	TURN SIGNAL LIGHT DBL FACE LENS	2	EA
8	3020013	SWITCH TOGGLE SPST ON OFF SEALED	1	EA
9	3040009	SW BOOT SHORT	1	EA
10	0074779	WIRING HARNESS TAIL LIGHTS	1	EA
11	3040113	MOUNTING BASE	1	EA
12	5093002	CLAMP	3	EA
13	3040083	TERM FEM250FI 16/14	9	EA
14	3060019	FLASHER	1	EA
15	3060018	FLASHER BASE	1	EA
16	3044071	TERM BUTT CONN INSUL 16/14	1	EA
17	970029	CAPSCREW 1/4-20 X 3/4 INCH LONG HEX HEAD GRADE 5	3	EA
18	987099	WASHER LOCK .250	3	EA
19	5560034	NUT HEX LKG 10-24	10	EA
20	974679	MACHINE SCREW, RND HD, SLOTTED, #10-24 UNC X .625 MTS 16, 18	2	EA
21	974709	SCREW RHD #10-24 X 1 PLATED	8	EA
22	3090006	TUBE FLEXGARD .350 ID	10 FT	EA
23	3011601	WIRE 16GA SINGLE CONDUCTOR BLK-TYPE GPT	10 FT	EA
24	986009	FLAT WASHER #10	8	EA

Courtesy of Crane.Market

Item	Part No.	Name	Qty	Uom
25	0181376	PLAC LIGHTS ON/OFF SW	1	EA
26	3040469	RELAY SPDT 12V 30AMP SONG	1	EA
27	0072418	JUMPER WIRE	2	EA
28	0073250	WIRE 18 R101 FEM1881 17 DIO	2	EA
29	0070758	WIRE 16 R6I R10I 20	1	EA
30	0112672	TUBE RD AL BOOM LIGHT BRACKET	2	EA

Courtesy of Crane.Market

OPTIONS

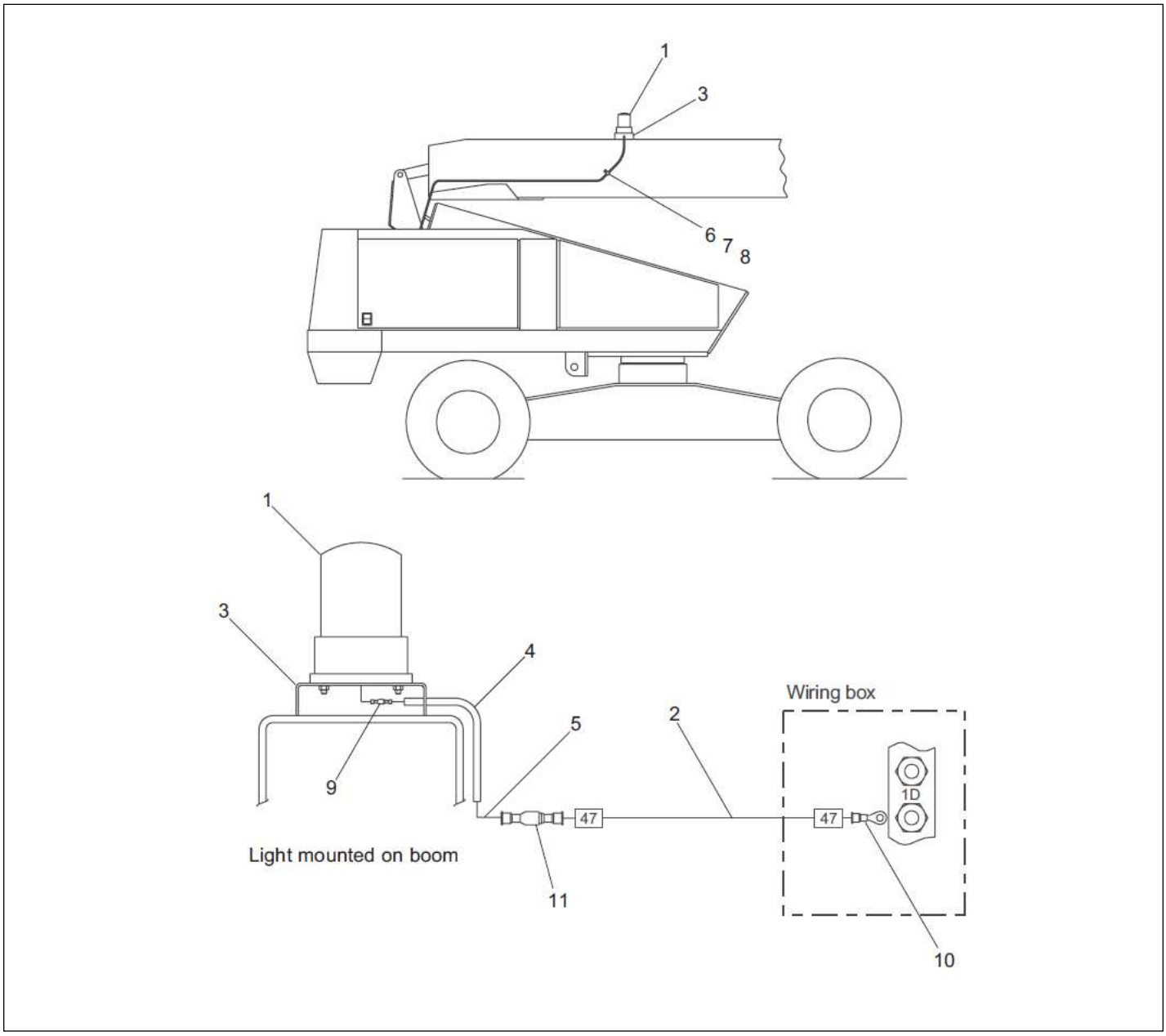

Courtesy of Crane.Market

Item	Part No.	Name	Qty	Uom
1	3060083	AMBER	1	EA
Not Shown	3060084	RED	1	EA
Not Shown	8160047	REPLACEMENT BULB	1	EA
2	3011601	WIRE 16GA SINGLE CONDUCTOR BLK-TYPE GPT	1	EA
3	0071395	LIGHT MOUNT BRACKET	1	EA
4	3090006	TUBE FLEXGARD .350 ID	1	EA
5	0072209	JUMPER WIRE	1	EA
6	5090305	HOSE CLAMP	1	EA
7	974659	SCREW RHD #10-24 X .50 PLATED	1	EA
8	987089	#10 LOCK WASHER	1	EA
9	3040046	TERM, .250 MALE SLIP-ON F.I. 22/18 WIRE	1	EA
10	3044146	TERM R10I 22/18	1	EA
11	3040083	TERM FEM250FI 16/14	1	EA

Courtesy of Crane.Market

OPTIONS

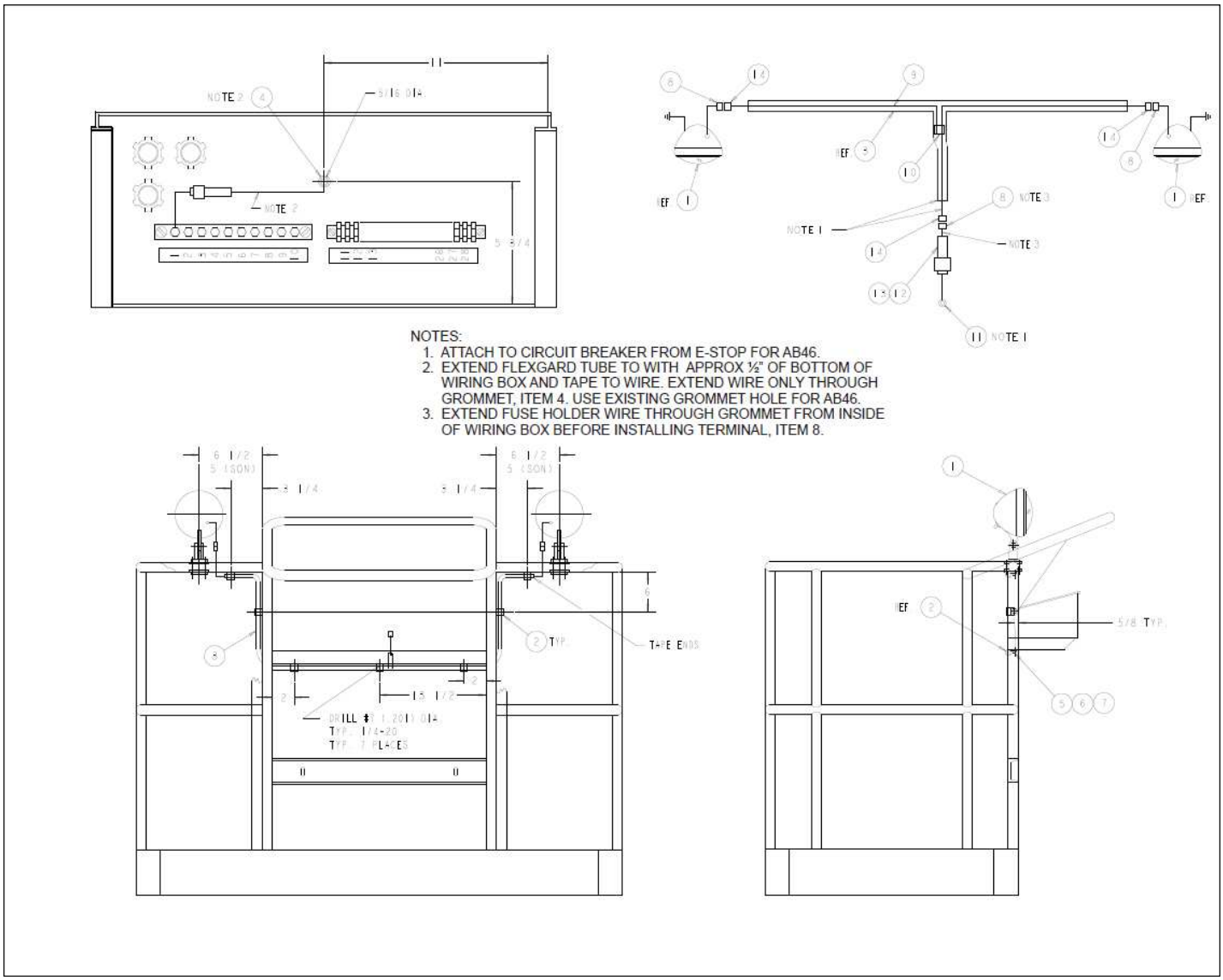

NOTES:
1. ATTACH TO CIRCUIT BREAKER FROM E-STOP FOR AB46.
2. EXTEND FLEXGARD TUBE TO WITH APPROX ½" OF BOTTOM OF WIRING BOX AND TAPE TO WIRE. EXTEND WIRE ONLY THROUGH GROMMET, ITEM 4. USE EXISTING GROMMET HOLE FOR AB46.
3. EXTEND FUSE HOLDER WIRE THROUGH GROMMET FROM INSIDE OF WIRING BOX BEFORE INSTALLING TERMINAL, ITEM 8.

Courtesy of Crane.Market

Item	Part No.	Name	Qty	Uom
Not Shown	0080768	OPT PLATF WORK LIGHTS 2 FLOOD	1	EA
1	3067620	LIGHT - FLOOD WITH CLAMP - HALOGEN	2	EA
Not Shown	3064413	LIGHT - FLOOD WITH CLAMP - INCANDESCENT	2	EA
Not Shown	3069528	WORK LIGHT – LED OVAL	2	EA
2	5093019	CLAMP	7	EA
3	3090019	FLEXGUARD TUBE .250 ID (NOTE 4)	7 FT	EA
4	5569003	GROMMET .188 ID .438OD .125-AN9	1	EA
5	970029	CAPSCREW 1/4-20 X 3/4 INCH LONG HEX HEAD GRADE 5	7	EA
6	986019	WASHER FLAT .250	7	EA
7	987099	WASHER LOCK .250	7	EA
8	3040082	TERM MALE250FI 16/14	3	EA
9	3011601	WIRE 16GA SINGLE CONDUCTOR BLK-TYPE GPT	7 FT	EA
10	3040114	CONNECTOR, IN-LINE 16/14 WIRE	1	EA
11	3044161	TERM R10I 16/14	1	EA
12	3040038	FUSE HOLDER, IN LINE, BUSS HRK	1	EA
13	3040039	FUSE, 10 AMP (1/4 X 1/4) BUSS AGC	1	EA
14	3040083	TERM FEM250FI 16/14	3	EA

Courtesy of Crane.Market

OPTIONS

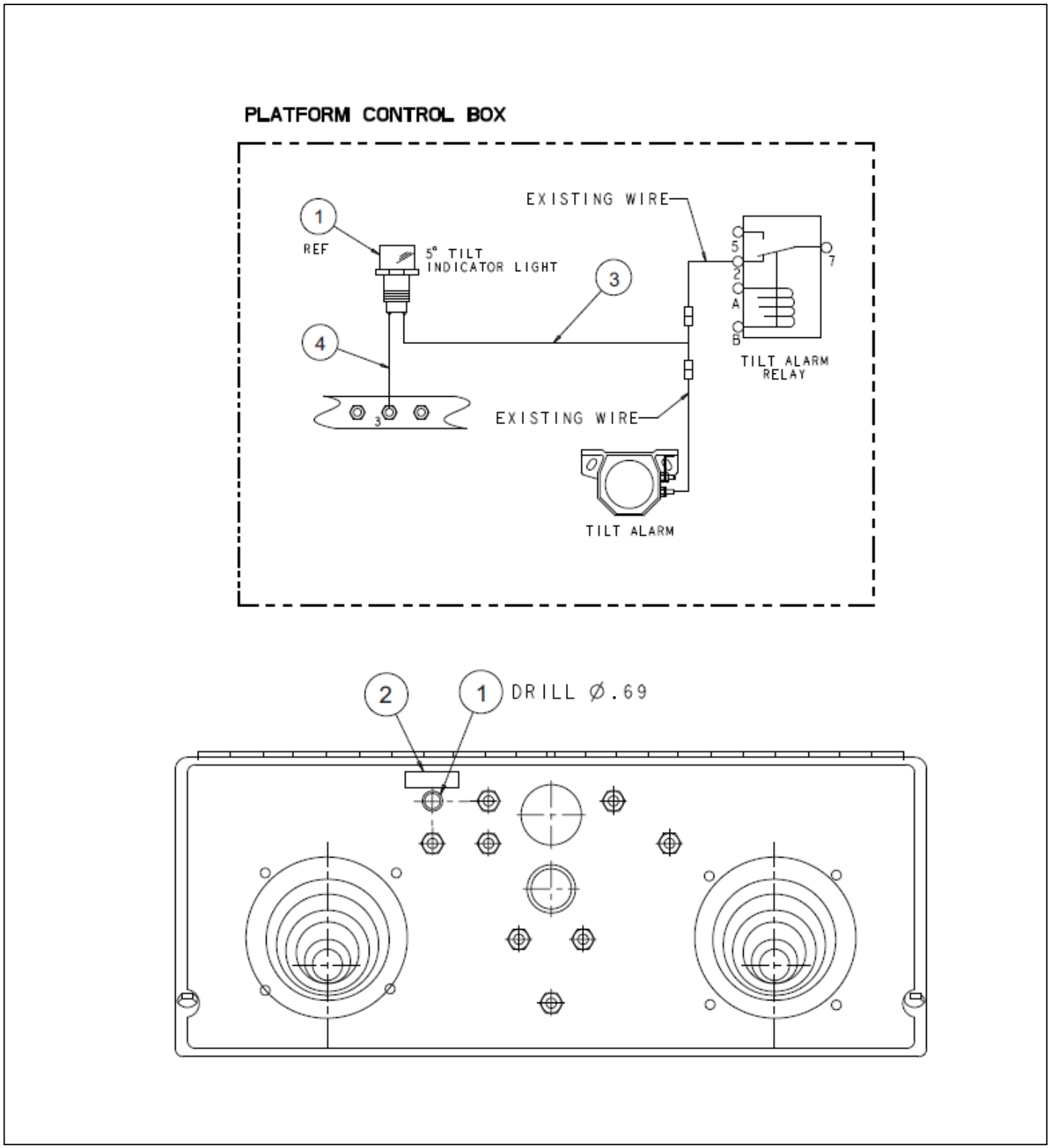

Courtesy of Crane.Market

Item	Part No.	Name	Qty	Uom
1	3069524	LIGHT, RED LED 12V .69 DIA	1	EA
2	0081384	DECAL WRN TILT LIGHT	1	EA
3	0163234	WIRE 16 SEE DRAWING	1	EA
4	0073727	WIRE 16 R101 FEM1881 16	1	EA

Courtesy of Crane.Market

OPTIONS

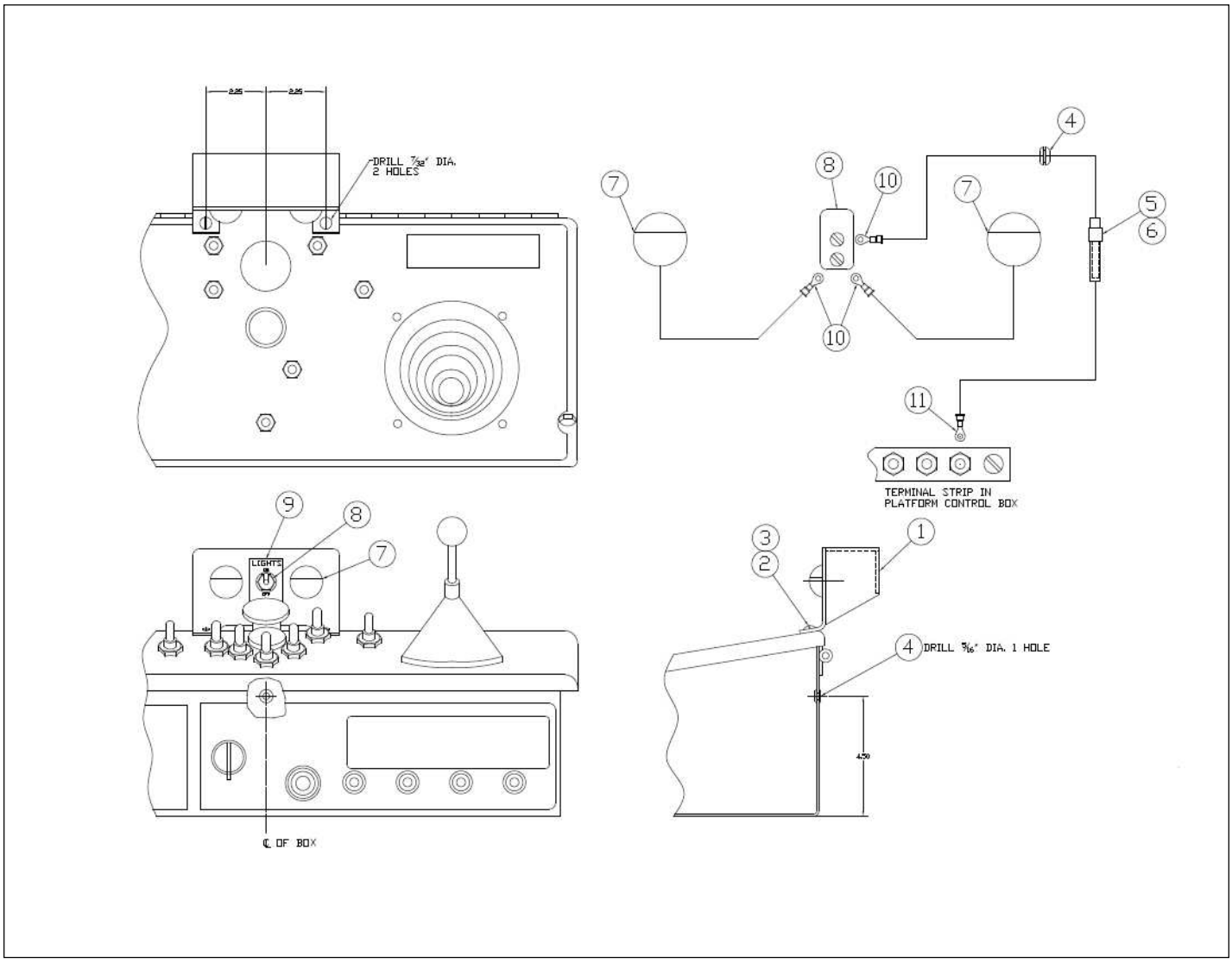

Courtesy of Crane.Market

Item	Part No.	Name	Qty	Uom
Not Shown	0072012	OPT PLATF BOX COURTESY LIGH	1	EA
1	0072004	LIGHT BRACKET WLDMT	1	EA
2	5560648	SCR RDHD 10-24 .750	2	EA
3	5560034	NUT HEX LKG 10-24	2	EA
4	5569003	GROMMET .188 ID .438OD .125-AN9	1	EA
5	3040038	FUSE HOLDER, IN LINE, BUSS HRK	1	EA
6	3040039	FUSE, 10 AMP (1/4 X 1/4) BUSS AGC	1	EA
7	3060008	COURTESY LIGHT	2	EA
8	3020013	SWITCH TOGGLE SPST ON OFF SEALED	1	EA
9	0181376	PLAC LIGHTS ON/OFF SW	1	EA
10	3044158	TERM R6I 16/14	3	EA
11	3044161	TERM R10I 16/14	1	EA

Courtesy of Crane.Market

OPTIONS

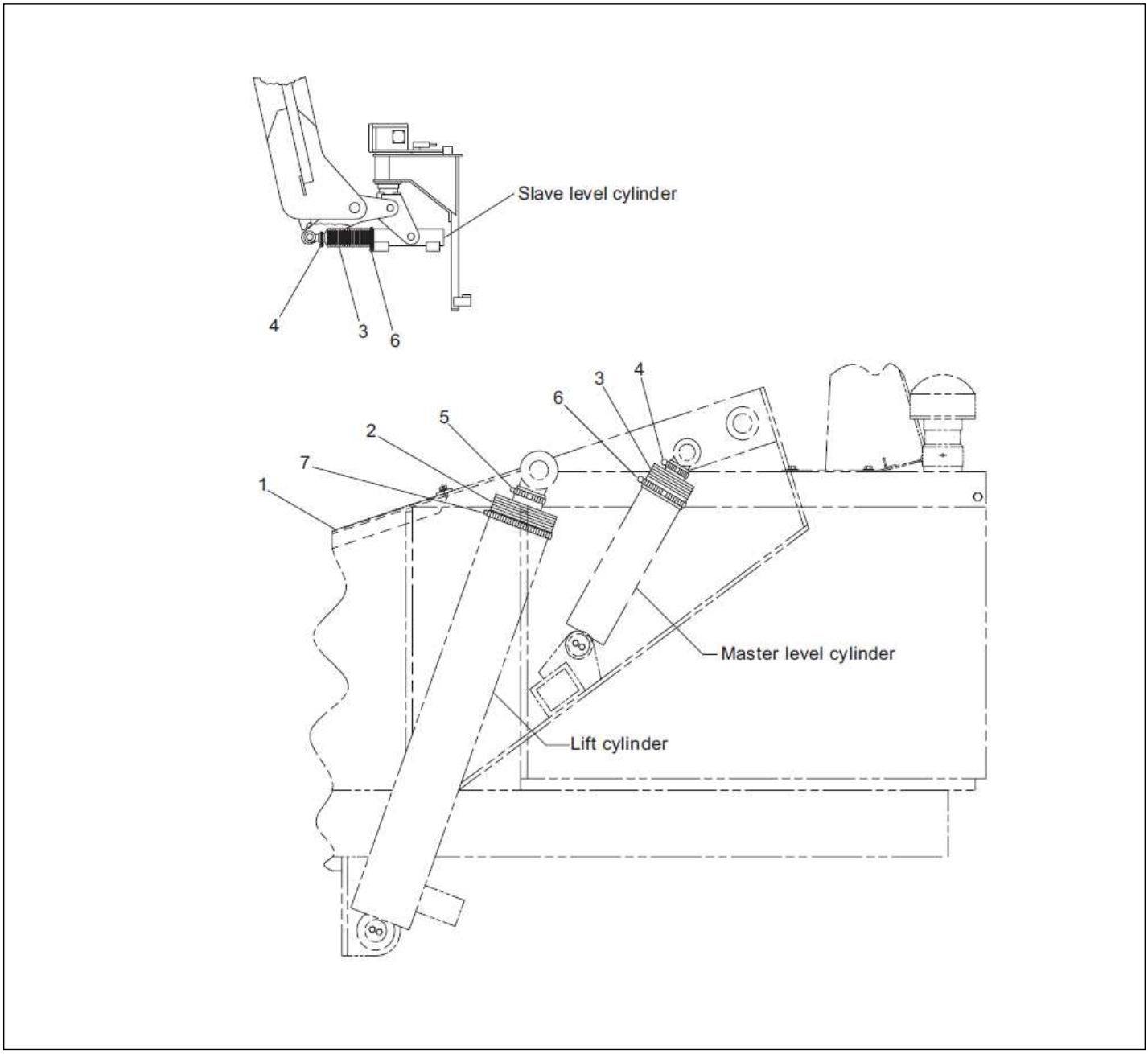

Courtesy of Crane.Market

Item	Part No.	Name	Qty	Uom
1	0080642	TURNTABLE COVER		EA
2	0080621	BELLOWS, LIFT CYLINDER		EA
3	0181159	BELLOWS, LEVEL CYLINDERS		EA
4	5550020	CLP WORM DRV .75-1.75 SAE#20		EA
5	5550040	CLAMP		EA
6	5550050	CLAMP		EA
7	5550105	CLAMP		EA

Courtesy of Crane.Market

OPTIONS

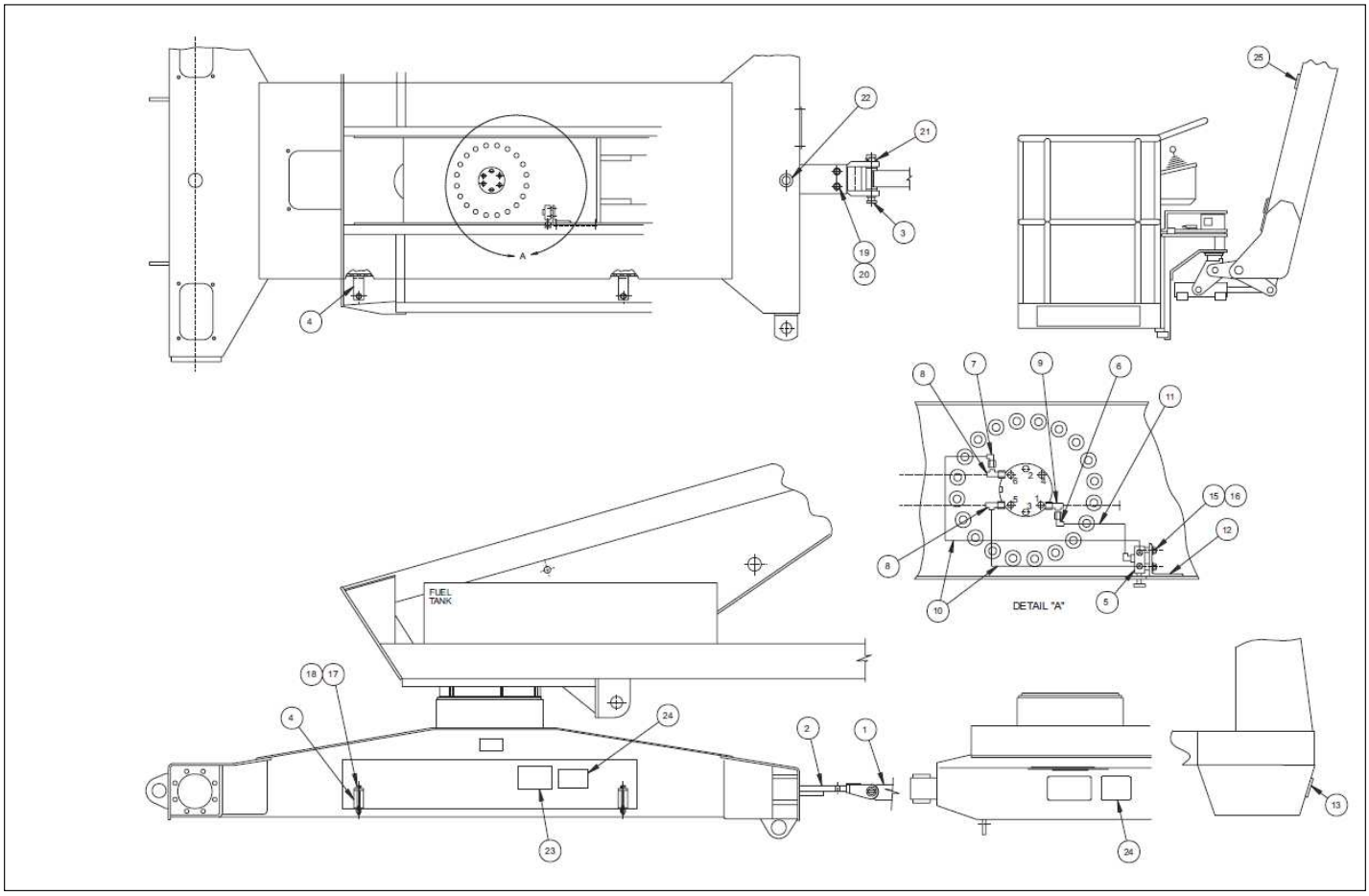

Courtesy of Crane.Market

Item	Part No.	Name	Qty	Uom
1	0072214	TOW BAR	1	EA
2	0081063	STEERING ARM, TOW PACKAGE	1	EA
3	0072216	TOWING PIN	1	EA
4	0072224	TOW BAR STORAGE CRADLE	2	EA
5	0072225	FLOAT VALVE	1	EA
Not Shown	5065708	FTG ADAPTER STRTHD -8B	2	EA
Not Shown	5035306	STRAIGHT THREAD 90° ELBOW	1	EA
6	5037006	FTG ELB90SWVL-8S-8S STL	1	EA
7	5037005	FTG ELB90SWVL-6S-6S STL	1	EA
8	5036705	FTG TEE SWIVEL RUN-6S-6S STL	2	EA
9	5036706	FTG TEE RUN-8S-8S STL	1	EA
10	0070766	1/4 INCH HYDRAULIC HOSE	2	EA
11	0070927	HOSE -8-8S-8S 23.5 100R2	1	EA
12	0072226	BRACKET, FLOAT VALVE	1	EA
13	0082203	DECAL, DANGER CRUSHING HAZARD	1	EA
14	5560662	DRIVE SCREW #4 X 1/4 INCH LONG PK TYPE U	12	EA
15	970239	BOLT HEXHD .313-18 .75 GR. 5	2	EA
16	987109	WASHER LOCK .313	2	EA
17	5560647	CAPSCREW 1/2-13 X 5 INCH LONG HEX HEAD GRADE 5	2	EA
18	5560039	NUT LKG .500-13	2	EA
19	2690001	BEARING, SELF ALIGNING	2	EA
20	5570003	GREASE FITTING 1/8 NPT 90°	2	EA
21	5580002	SNAPPER PIN	1	EA
22	2502416	BEARING	2	EA
23	0082160	DECAL, DANGER TOW PACKAGE	1	EA

Courtesy of Crane.Market

Item	Part No.	Name	Qty	Uom
24	0072203	DECAL, TOWING INSTRUCTIONS	2	EA
25	0082164	DECAL, DANGER DO NOT RIDE	1	EA

Courtesy of Crane.Market

OPTIONS

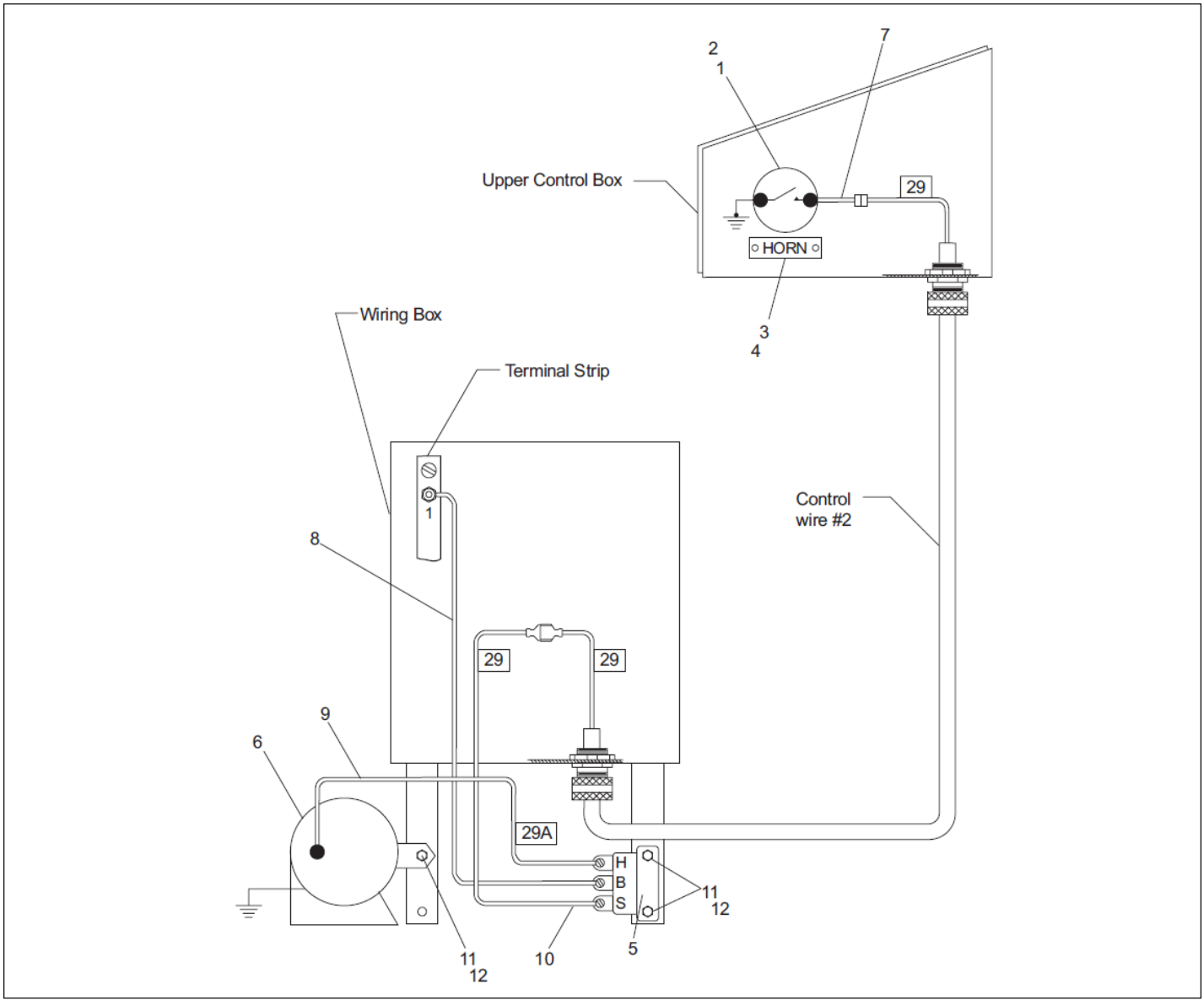

Courtesy of Crane.Market

Item	Part No.	Name	Qty	Uom
1	3026027	SW PUSH BUTTON	1	EA
2	7140092	SEAL KIT 600-0002-5/8	1	EA
3	0071269	DECAL HORN	1	EA
4	5560655	RVT POP .094 DIA .125 DMD STL	2	EA
5	3040128	HORN RELAY, 12 VOLT DC	1	EA
6	3040127	HORN	1	EA
7	0071557	WIRE 18 R8I MALE250FI 7	1	EA
8	0070733	WIRE 16 R8I R10I 24	2	EA
9	0070759	JUMPER WIRE	1	EA
10	0070760	JUMPER WIRE	1	EA
11	970029	CAPSCREW 1/4-20 X 3/4 INCH LONG HEX HEAD GRADE 5	3	EA
12	987099	WASHER LOCK .250	3	EA

Courtesy of Crane.Market

OPTIONS

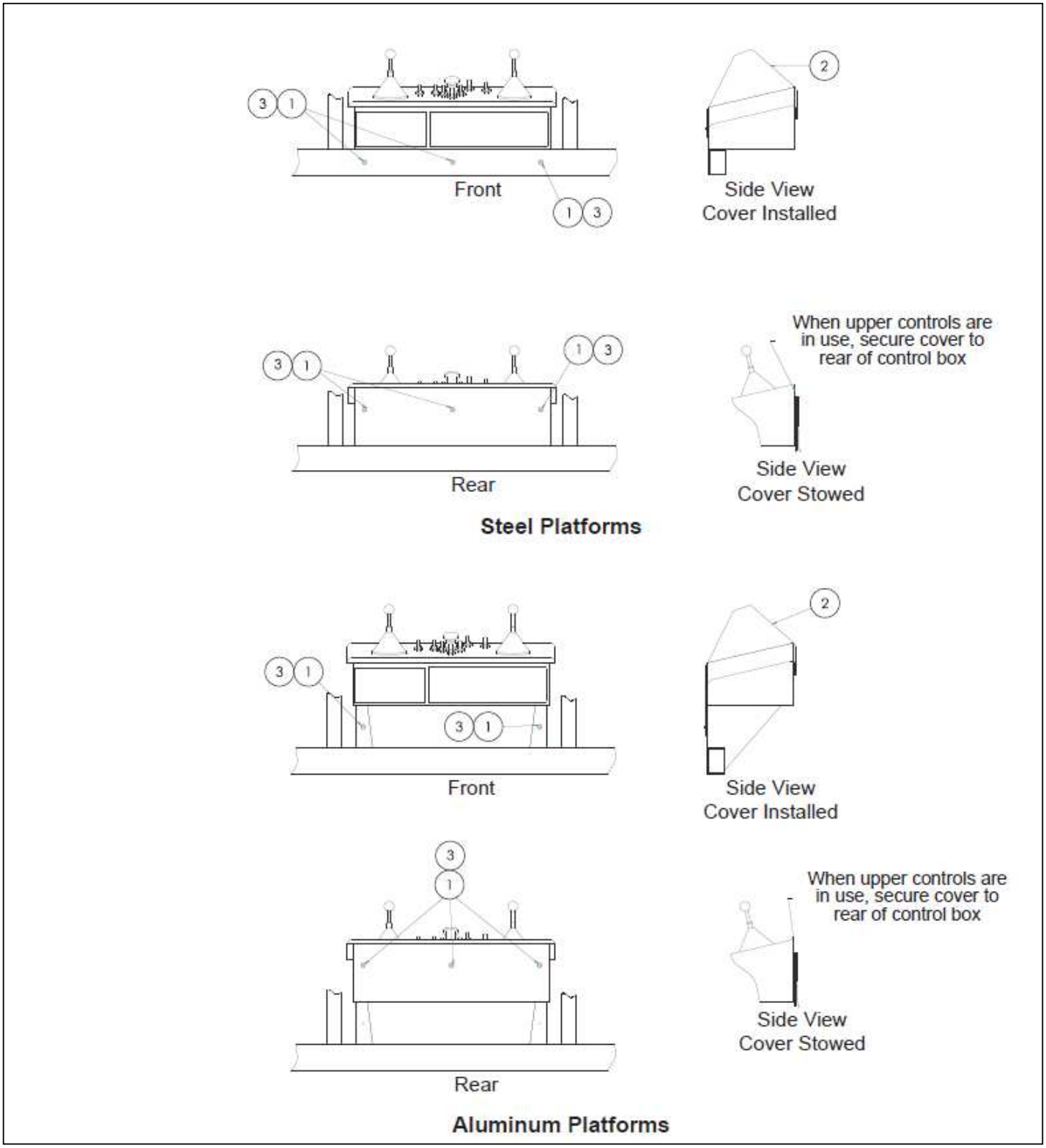

Courtesy of Crane.Market

Item	Part No.	Name	Qty	Uom
Not Shown	0071654	OPT PLATF CONT COVER TB/ATB	1	EA
1	PNNA	SNAP FASTENER – INCLUDED WITH COVER	6	EA
2	0073076	UPPER CONTROL BOX COVER, STANDARD	1	EA
Not Shown	0074782	UPPER CONTROL BOX COVER, FIRE RESISTANT	1	EA
3	5560656	POP RIVET 1/8 INCH ALUMINUM #RVT-AD46 ABS	6	EA

Courtesy of Crane.Market

OPTIONS

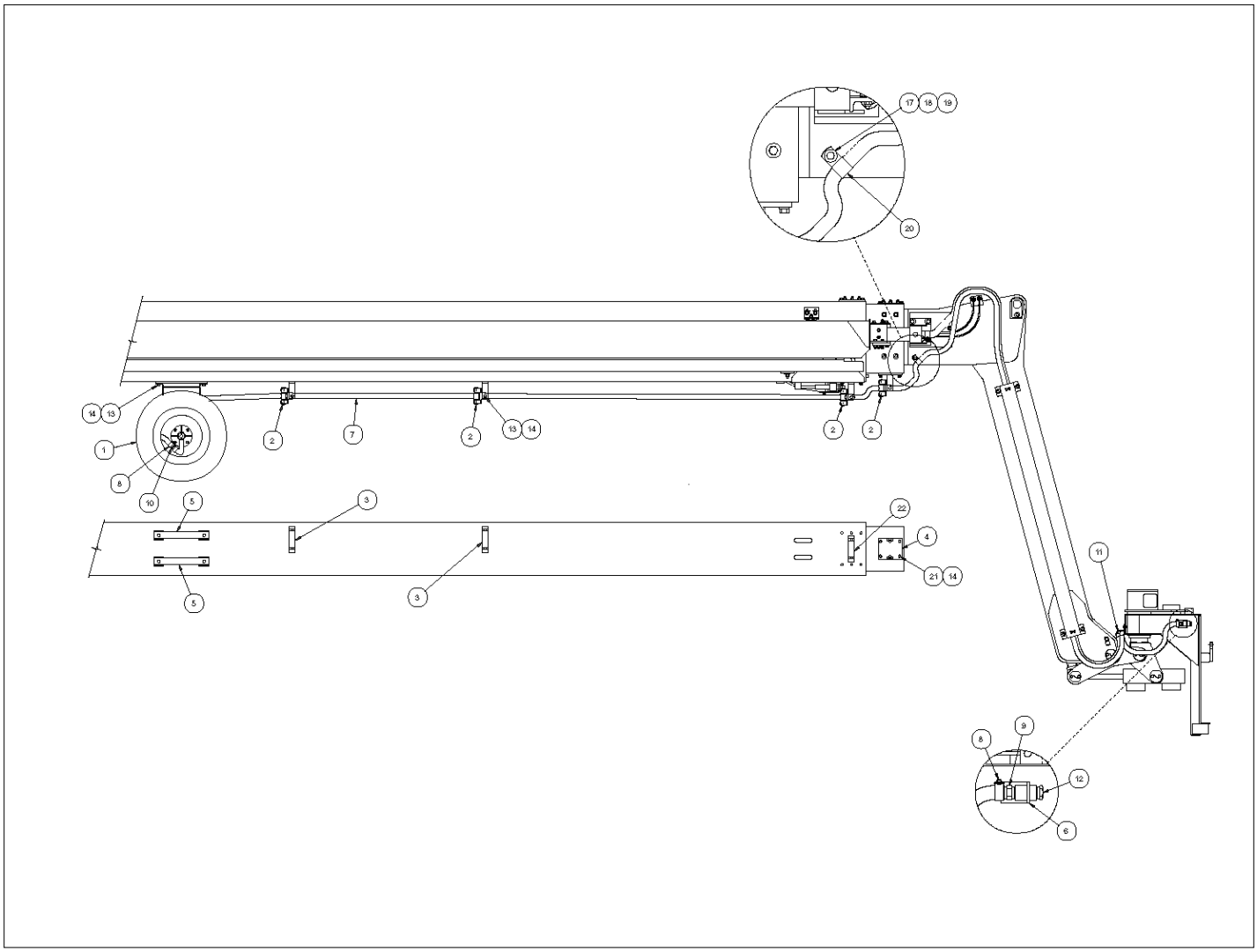

Courtesy of Crane.Market

Item	Part No.	Name	Qty	Uom
1	5240002	HOSE REEL	1	EA
2	5550021	CABLE GUIDE 4 ROLLER	4	EA
3	0080749	BASE BOOM CABLE GUIDE BRACKET	2	EA
4	0080752	INTERMEDIATE BOOM CABLE GUIDE BRACKET	1	EA
5	0080754	MOUNTING BAR	2	EA
6	0181276	BULKHEAD BRACKET	1	EA
7	0082334	HOSE AIR -8 X 756 IN	1	EA
8	5550020	CLP WORM DRV .75-1.75 SAE#20	2	EA
9	5260013	HOSE END, 1/2NPT/1/2 BARKED	1	EA
10	5260012	FTG ADPTR MALE -6N-8 BARBED	1	EA
11	5093012	CUSHION CLAMP #28 (1-3/4")	1	EA
12	7714204	PLUG, 1/2NPT SQHD	2	EA
13	970426	BLT HHD .375-16 X .875	12	EA
14	986299	BOLT HEXHD .313-18 2.50 GR. 5	18	EA
16	987119	BOLT HEXHD .375-16 1.75 GR. 5	18	EA
17	970239	BOLT HEXHD .313-18 .75 GR. 5	1	EA
18	986269	WASHER 5/16 MEDIUM FLAT	1	EA
19	987109	WASHER LOCK .313	1	EA
20	5093006	CLAMP	1	EA
21	970489	CAPSCREW 3/8-16 X 1-1/2 INCH LONG HEX HEAD GRADE 5	6	EA
22	0084019	WLDMT GUIDE BRKT	1	EA

Courtesy of Crane.Market

OPTIONS

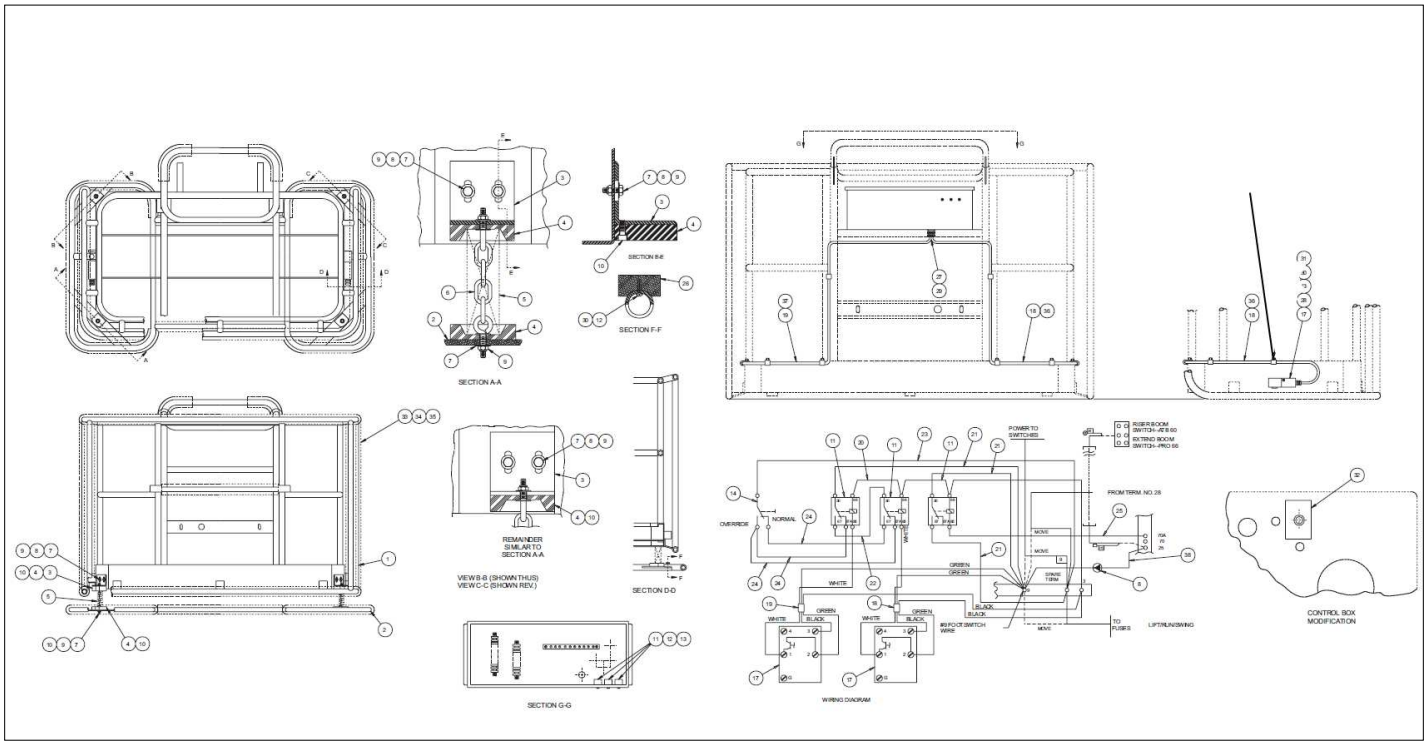

Courtesy of Crane.Market

Item	Part No.	Name	Qty	Uom
1	0181389	PLATFORM BUMPER FRAME	1	EA
2	0181377	FRAME	1	EA
3	0181382	SPRING KEEPER MOUNT ANGLE	4	EA
4	0181381	SPRING KEEPER	8	EA
5	5530013	SPRING	4	EA
6	0181408	CHAIN	4	EA
7	986019	WASHER FLAT .250	3	EA
8	0073250	WIRE 18 R101 FEM1881 17 DIO	4	EA
9	5560004	NUT HEXHD .250-20 LKG	1	EA
10	5560330	CAPSCREW 1/4-20 X 3/4 INCH LONG SOCKET FLAT HEAD	16	EA
11	3040502	RELAY SPDT 12V 70AMP	16	EA
12	974639	MACHINE SCREW #10-24 X 3/8 INCH LONG ROUND HEAD	3	EA
13	5560034	NUT HEX LKG 10-24	5	EA
14	3020080	SWITCH TOGGLE SPDT MOM/ON	3	EA
15	5093001	CUSHION CLAMP #8 (1/2)	1	EA
16	987099	WASHER LOCK .250	10	EA
17	3020098	SWITCH, PHOTOELECTRIC	10	EA
18	3011803	WIRE 18 GA 3 CONDUCTOR	2	EA
19	3011803	WIRE 18 GA 3 CONDUCTOR	1	EA
20	0181102	JUMPER WIRE	1	EA
21	0181103	WIRE 16 R10 FEM250FI 15	3	EA
22	0111476	JUMPER WIRE	1	EA
23	0070758	WIRE 16 R6I R10I 20	1	EA
24	0150756	WIRE 16 R8I FEM250FI 36	3	EA
25	0071528	JUMPER WIRE	1	EA
26	0181406	TARGET	2	EA
27	3040115	HOLE PLUG, 1/2 INCH DIAMETER	1	EA

Courtesy of Crane.Market

Item	Part No.	Name	Qty	Uom
28	3040187	CONNECTOR	2	EA
29	3040110	NUT LKG HUB .750 SAMEAS 962129	1	EA
30	986009	FLAT WASHER #10	1	EA
31	974769	MACHINE SCREW #10-24 X 2-1/4 INCH LONG ROUND HEAD	4	EA
32	0181407	PLACARD, PROXIMITY SWITCH OVERRIDE	1	EA
33	9980004	COVER KIT	1	EA
34	9980003	PIPE INSULATION CLOSED CELL FOAM	1	EA
35	9980005	CABLE TIE, BLACK 7 IN LONG	500	EA
36	9980006	PLASTIC FLEXIBLE PIPE, 3/8 INCH DIAMETER X 84 INCH LONG	1	EA
37	9980006	PLASTIC FLEXIBLE PIPE, 3/8 INCH DIAMETER X 84 INCH LONG	1	EA
38	0110835	JUMPER WIRE	1	EA

Courtesy of Crane.Market

OPTIONS

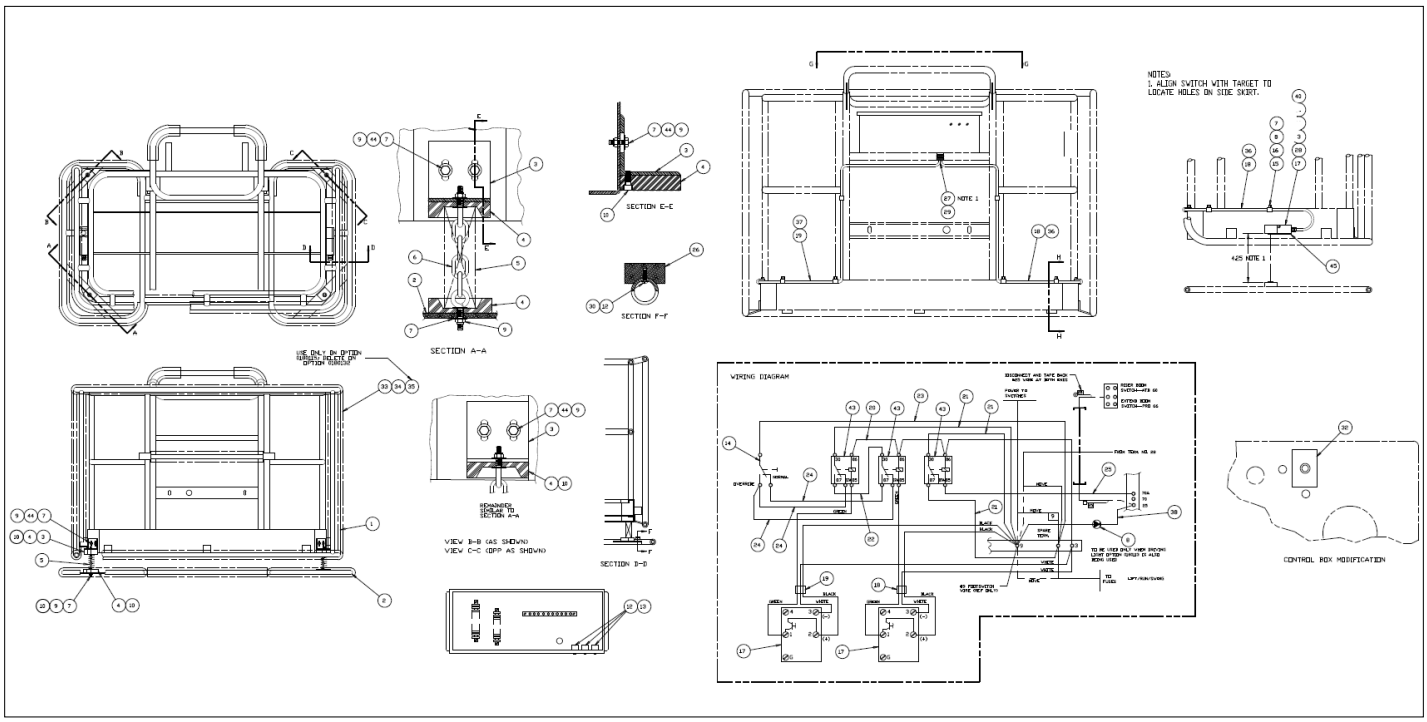

Courtesy of Crane.Market

Item	Part No.	Name	Qty	Uom
1	0181389	PLATFORM BUMPER FRAME	1	EA
2	0181377	FRAME	1	EA
3	0181382	SPRING KEEPER MOUNT ANGLE	4	EA
4	0181381	SPRING KEEPER	8	EA
5	5530013	SPRING	4	EA
6	0181408	CHAIN	4	EA
7	986019	WASHER FLAT .250	36	EA
8	0073250	WIRE 18 R101 FEM1881 17 DIO	1	EA
9	5560004	NUT HEXHD .250-20 LKG	18	EA
10	978389	BLT SKTHD 1/4-20 X 3/4 GR8	18	EA
12	974639	MACHINE SCREW #10-24 X 3/8 INCH LONG ROUND HEAD	5	EA
13	5560034	NUT HEX LKG 10-24	3	EA
14	3020080	SWITCH TOGGLE SPDT MOM/ON	1	EA
15	5093001	CUSHION CLAMP #8 (1/2)	10	EA
16	978099	LOCKWASHER, 1/4"	10	EA
17	3020098	SWITCH, PHOTOELECTRIC	2	EA
18	3011803	WIRE 18 GA 3 CONDUCTOR	8 FT	EA
19	3011803	WIRE 18 GA 3 CONDUCTOR	8.5 FT	EA
20	0181102	JUMPER WIRE	1	EA
21	0181103	WIRE 16 R10 FEM250FI 15	3	EA
22	0111476	JUMPER WIRE	1	EA
23	0070758	WIRE 16 R6I R10I 20	1	EA
24	0150756	WIRE 16 R8I FEM250FI 36	3	EA
25	0071528	JUMPER WIRE	1	EA
26	0181406	TARGET	2	EA
27	SEE NOTE	CONNECTOR	1	EA
28	3040187	CONNECTOR	2	EA

Courtesy of Crane.Market

Item	Part No.	Name	Qty	Uom
29	3040110	NUT LKG HUB .750 SAMEAS 962129	1	EA
30	986009	FLAT WASHER #10	2	EA
31	974769	MACHINE SCREW #10-24 X 2-1/4 INCH LONG ROUND HEAD	4	EA
32	0181407	PLACARD, PROXIMITY SWITCH OVERRIDE	1	EA
33	9980004	COVER KIT	1	EA
34	9980003	PIPE INSULATION CLOSED CELL FOAM	73 IN	EA
35	9980005	CABLE TIE, BLACK 7 IN LONG	500	EA
36	9980006	PLASTIC FLEXIBLE PIPE, 3/8 INCH DIAMETER X 84 INCH LONG	6.5 FT	EA
37	9980006	PLASTIC FLEXIBLE PIPE, 3/8 INCH DIAMETER X 84 INCH LONG	7 FT	EA
38	0110835	JUMPER WIRE	1	EA
39	0181480	SPB-TB-16 – REFERENCE PRINT	1	EA
40	3040070	LOCKNUT .50	2	EA
43	3040469	RELAY SPDT 12V 30AMP SONG	3	EA
44	5560383	BLT HEXHD .250-20 .75 GR8	18	EA
45	0182340	SENSOR BRKT	2	EA

Courtesy of Crane.Market

OPTIONS

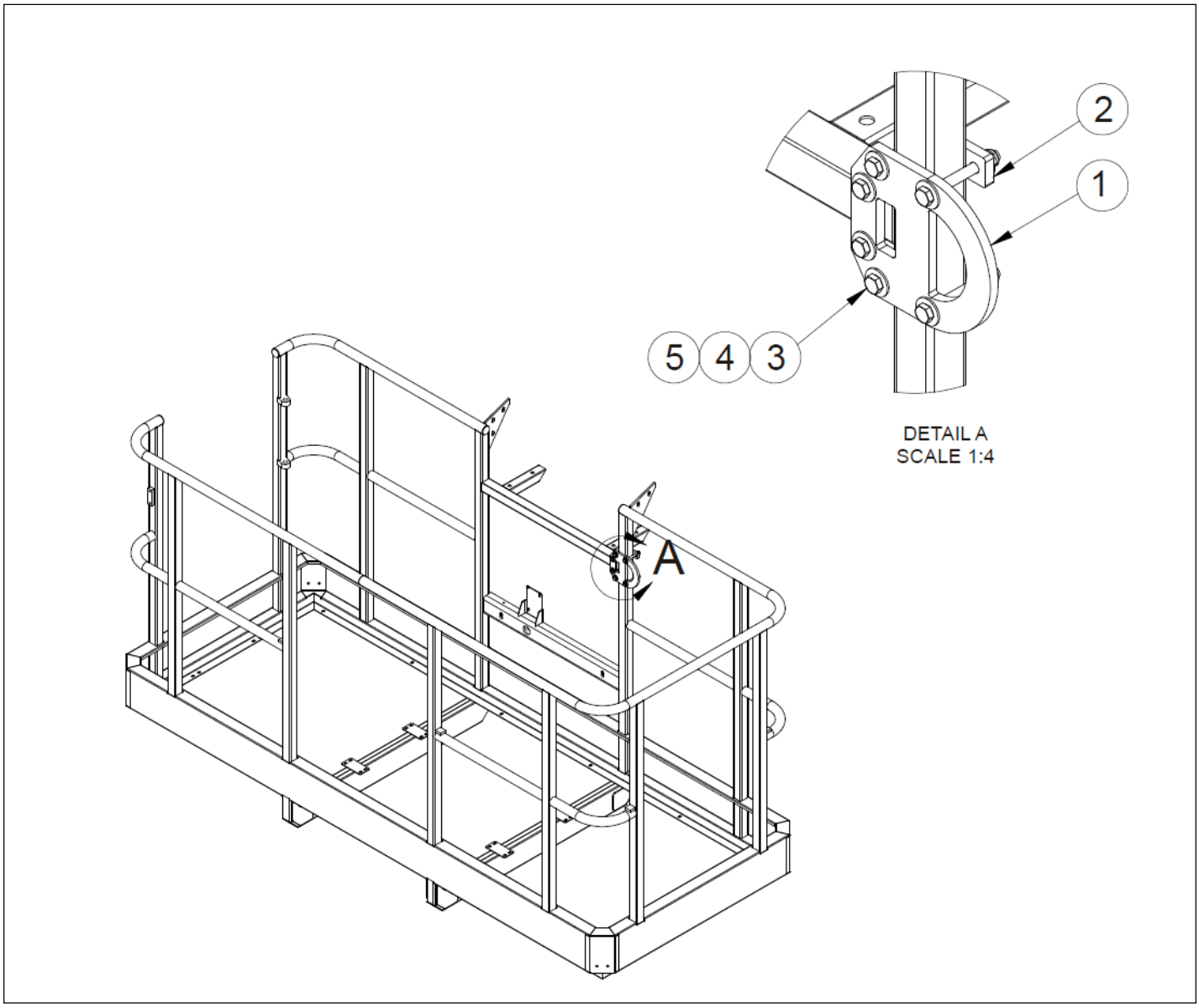

Courtesy of Crane.Market

Item	Part No.	Name	Qty	Uom
Not Shown	1430690	OPTION LANYARD MOUNT	1	EA
1	1430688	PLATE, LANYARD MOUNT	1	EA
2	1430689	PLATE, LANYARD BACKING	1	EA
3	970349	BLT HEXHD .313-18 2.75 GR5	6	EA
4	986269	WASHER 5/16 MEDIUM FLAT	12	EA
5	5560031	NUT HEX LKG .313-18	6	EA

Courtesy of Crane.Market

OPTIONS

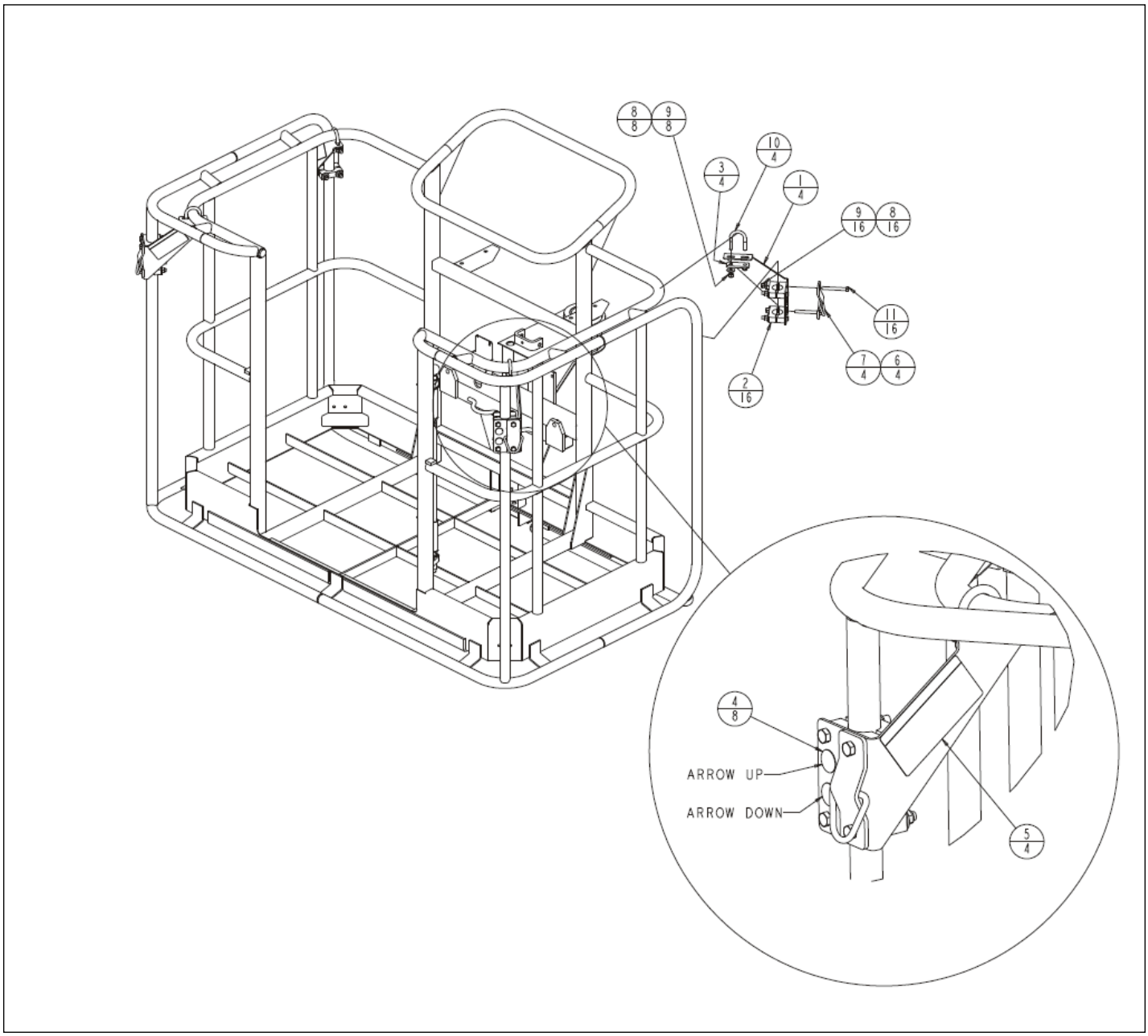

Courtesy of Crane.Market

Item	Part No.	Name	Qty	Uom
1	0182138	BRACKET, PFAS LANYARD MOUNT	4	EA
2	0182139	CLAMP, PFAS LANYARD MOUNT	16	EA
3	0182140	DOUBLER, PFAS LANYARD MOUNT	4	EA
4	0182147	DECAL, DO NOT LIFT	8	EA
5	0182149	DECAL, DANGER PFAS FALLING HAZARD	4	EA
6	0360891	BRACKET, PFAS LANYARD ATTACHMENT	4	EA
7	0360892	TIE DOWN, D-RING	4	EA
8	986299	BOLT HEXHD .313-18 2.50 GR. 5	24	EA
9	5560033	NUT HEXHD .375-16 LKG	24	EA
10	5563028	U-BOLT, .375-16 X 1.5D	4	EA
11	5563029	BOLT, HEX HEAD .375-16 3.25 GR8	16	EA
Not Shown	0182150	PFAS USER'S MANUAL – ITEM NOT SHOWN	1	EA

Courtesy of Crane.Market

OPTIONS

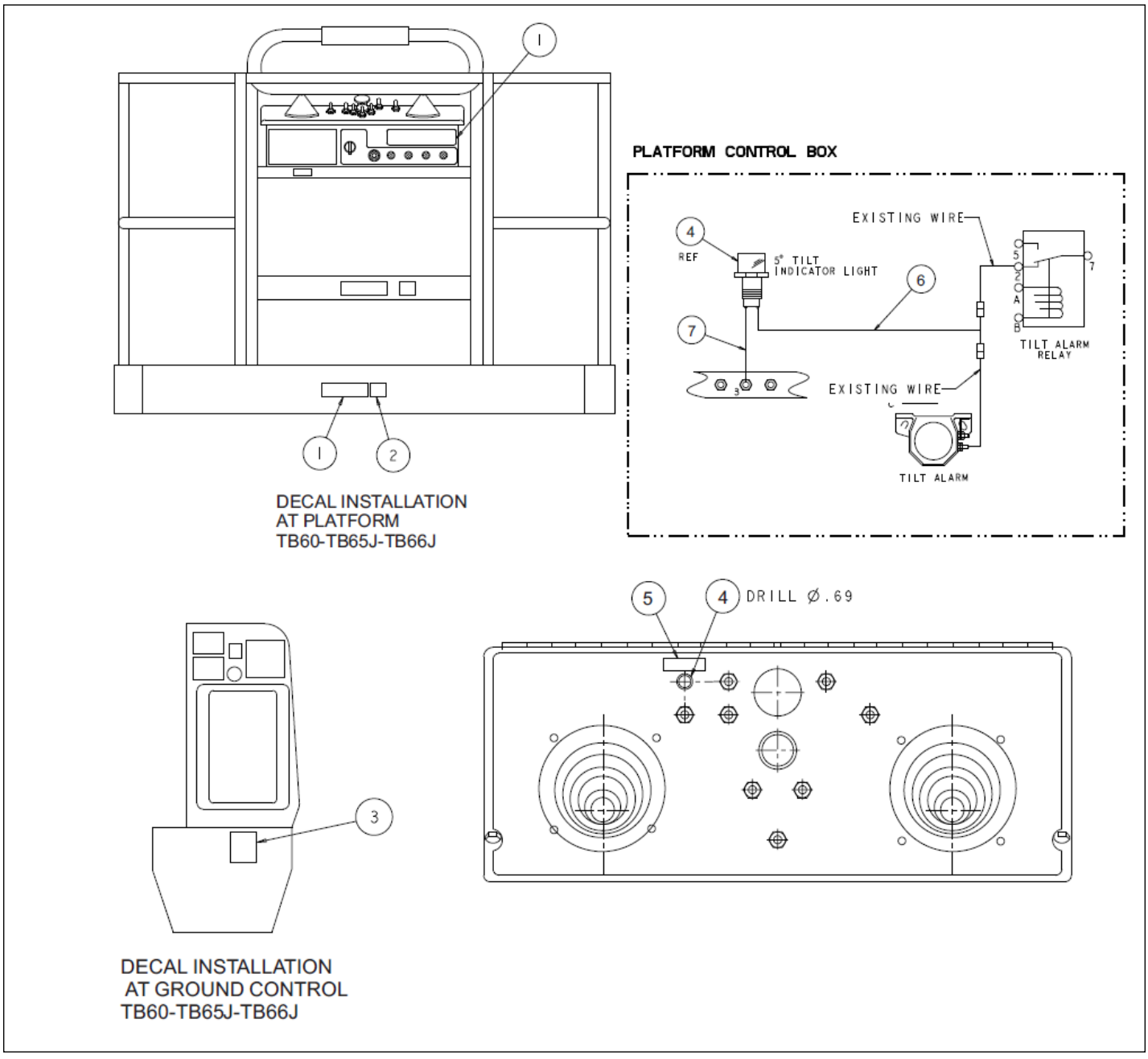

Courtesy of Crane.Market

Item	Part No.	Name	Qty	Uom
1	0090589E	PLACARD	2	EA
2	0075235	*DECAL SIDE LOAD	1	EA
3	0075234	DECAL CSA COMPLIANCE	1	EA
4	3069524	LIGHT, RED LED 12V .69 DIA	1	EA
5	0081384	DECAL WRN TILT LIGHT	1	EA
6	0163234	WIRE 16 SEE DRAWING	1	EA
7	0073727	WIRE 16 R101 FEM1881 16	1	EA
8	0074926	OPTION ALL MOTION ALARM W/OUT HORN	1	EA
Not Shown	0083735	MANUAL REPAIR TB60 – ITEM NOT SHOWN	1	EA
Not Shown	0084017	MANUAL INSPECTION AND MAINT CHECKLIST – ITEM NOT SHOWN	1	EA

Courtesy of Crane.Market

OPTIONS

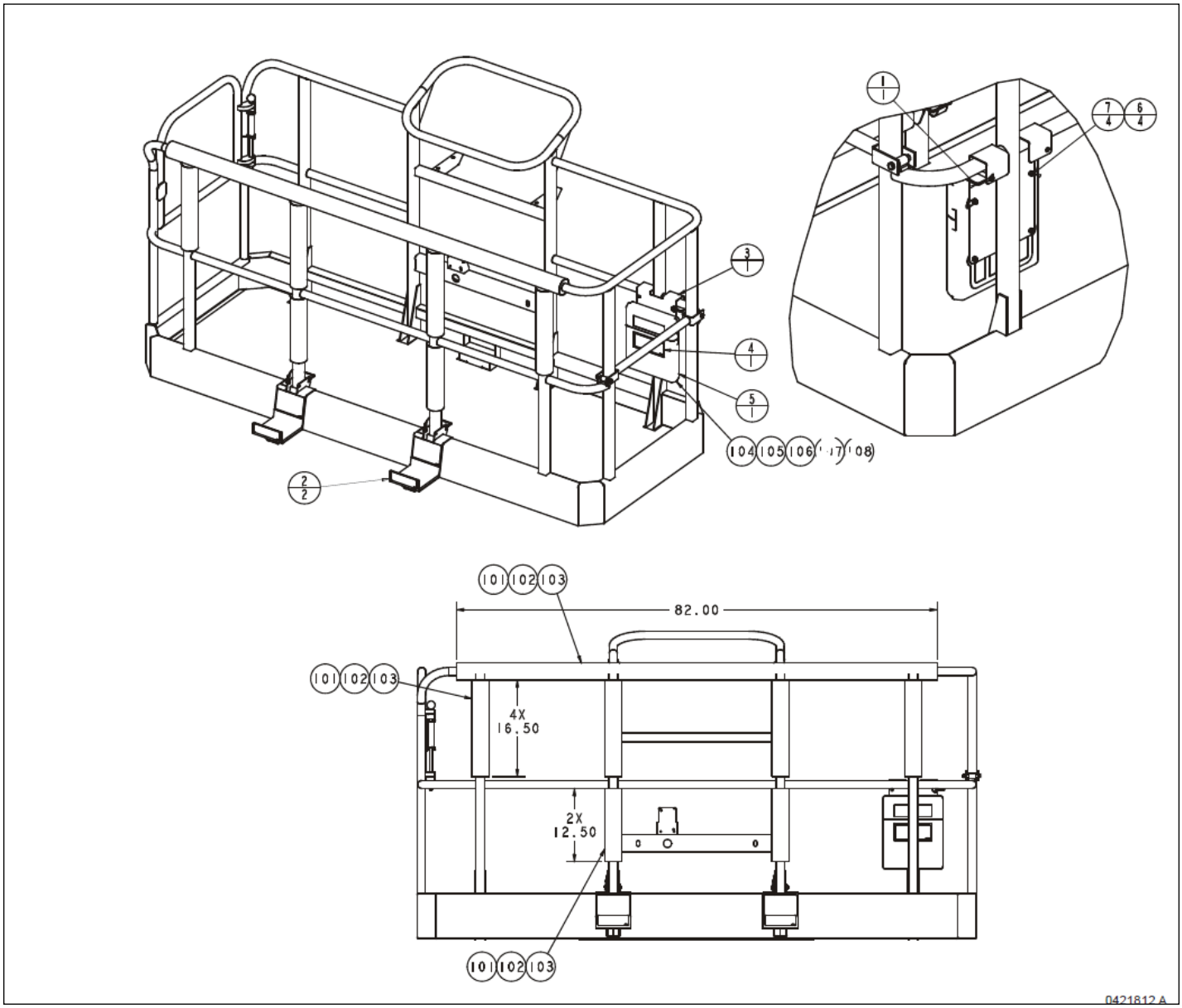

Courtesy of Crane.Market

Item	Part No.	Name	Qty	Uom
1	302544	SNAP PIN W/ LANYARD .375 X 2.25	1	EA
2	0421067	GLAZIER TRAY ASSEMBLY 2 ENTRY PLATFORM	2	EA
Not Shown	0421811	GLAZIER TRAY ASSEMBLY 3 ENTRY PLATFORM	2	EA
3	0421283	BRACKET, GLAZIER PACKAGE	1	EA
4	0421285	DECAL, GLAZIER PACKAGE BOX	1	EA
5	562386	COMPARTMENT LITERATURE 8.5X11	1	EA
6	5560034	NUT HEX LKG 10-24	4	EA
7	5560609	SCR TRHD 10-24 .50	4	EA
101	9980003	PIPE INSULATION CLOSED CELL FOAM	216 IN	EA
102	9980008	COVER, STRAIGHT 16 FT LONG	1	EA
103	9980005	CABLE TIE, BLACK 7 IN LONG	70	EA
104	0421299	GLAZIER CAM STRAP – TIE-DOWN STRAP	1	EA
105	9960007	ASSIST STRAP 18 IN LONG	2	EA
106	0421269	GLAZIER PACKAGE OPERATOR’S MANUAL	1	EA
107	7050006	DOCUMENT POUCH, ADHESIVE BACKED	1	EA
108	7050007	DOCUMENT POUCH, RECLOSEABLE	1	EA

Courtesy of Crane.Market

OPTIONS

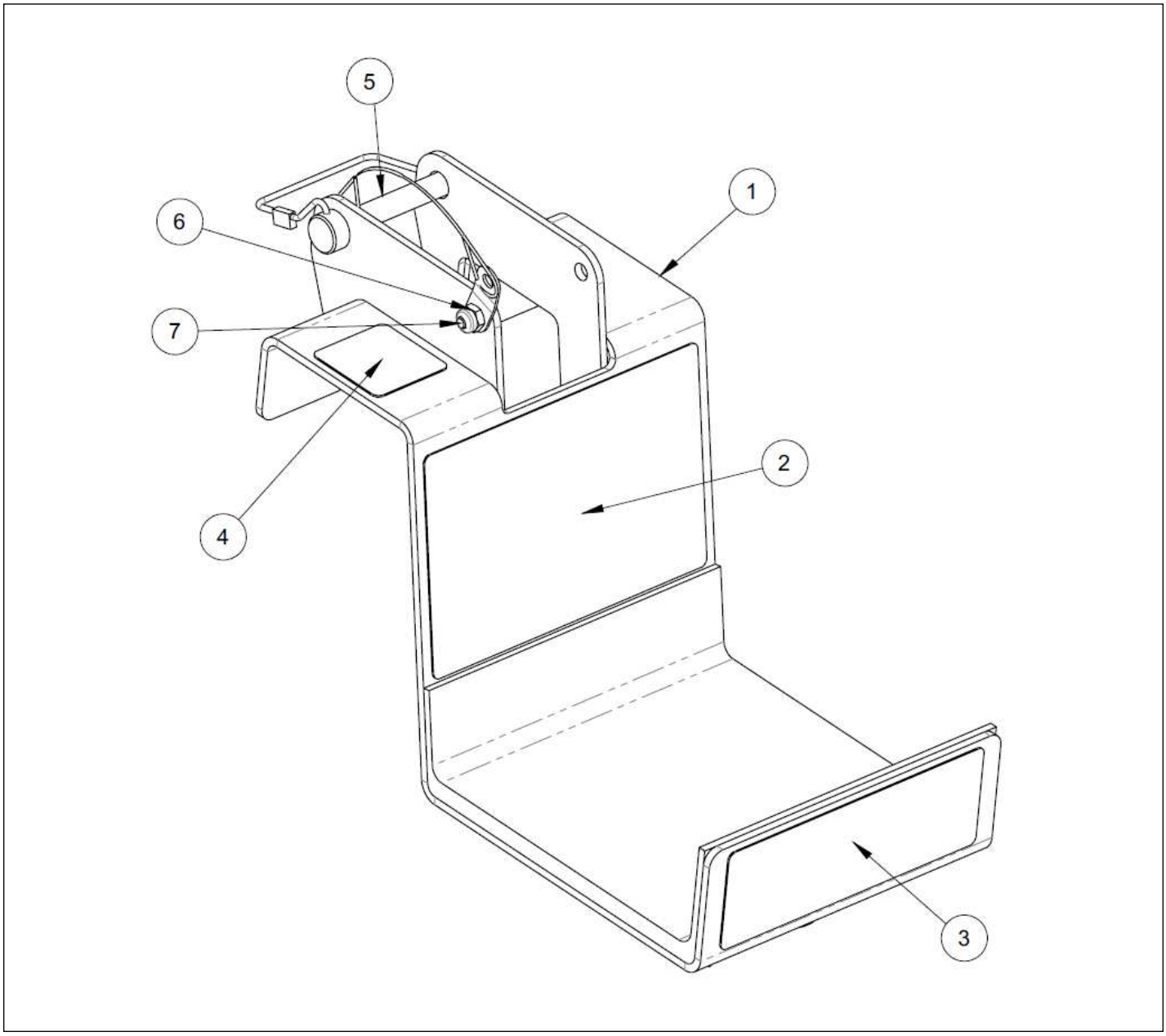

Courtesy of Crane.Market

Item	Part No.	Name	Qty	Uom
Not Shown	0421067	GLAZIER TRAY ASSEMBLY 2 ENTRY PLATFORM	1	EA
Not Shown	0421811	GLAZIER TRAY ASSEMBLY 3 ENTRY PLATFORM	1	EA
1	0421066	GLAZIER TRAY LINED AND PAINTED 2 ENTRY PLATFORM	1	EA
Not Shown	0421810	GLAZIER TRAY LINED AND PAINTED 3 ENTRY PLATFORM	1	EA
2	0421078	DECAL GLAZIER FALL OBJECT HAZARD	1	EA
3	0421077	DECAL GLAZIER TIP HAZARD	1	EA
4	0421079	PLACARD NO STEP	1	EA
5	302544	SNAP PIN W/ LANYARD .375 X 2.25	1	EA
6	5560034	NUT HEX LKG 10-24	1	EA
7	5560104	SBHCS #10-24 X .50 STL GR8 PLTD	1	EA

Courtesy of Crane.Market

OPTIONS

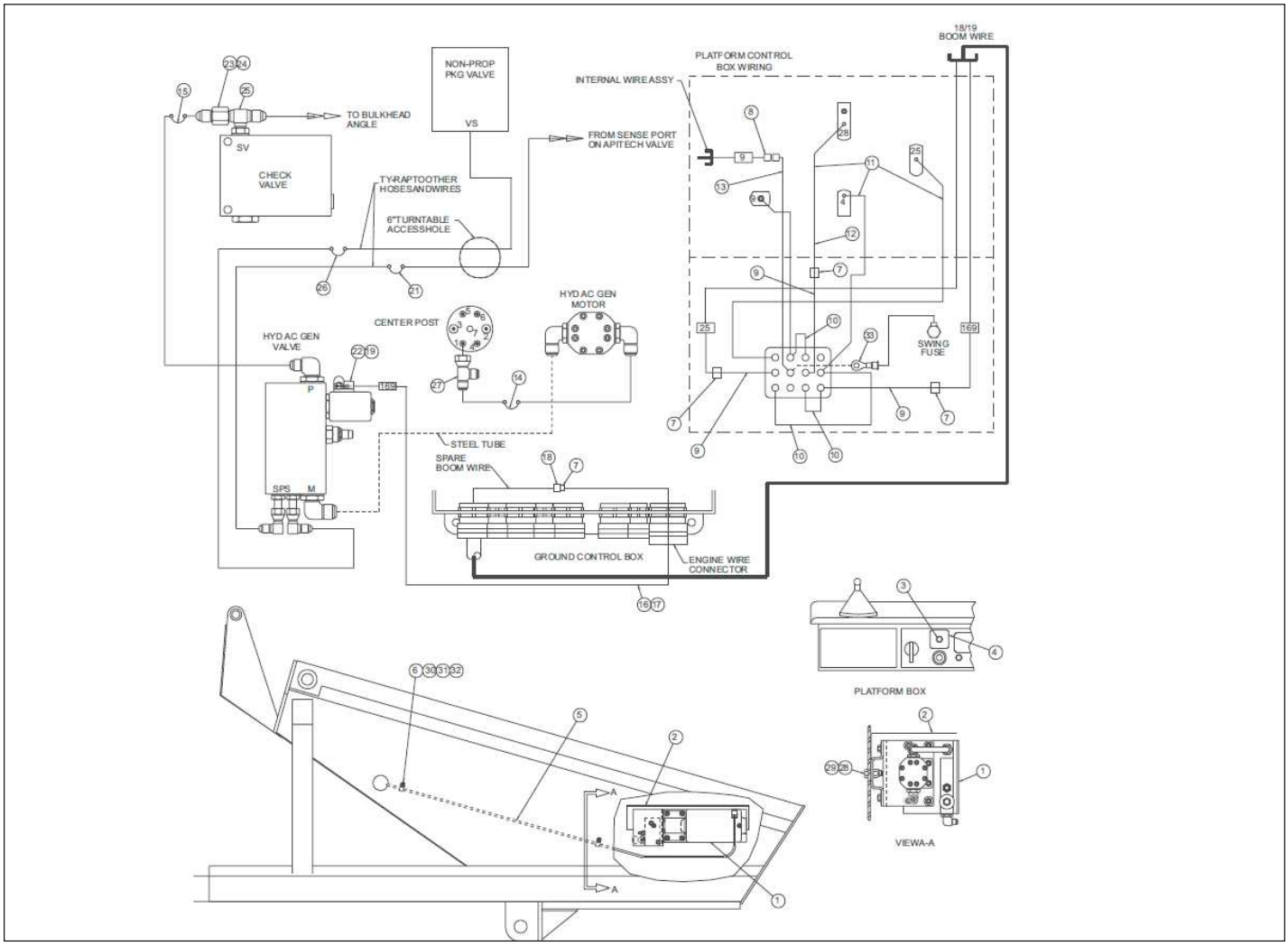

Courtesy of Crane.Market

Item	Part No.	Name	Qty	Uom
1	0151471	HYD AC GENERATOR SUB-ASSY	1	EA
2	0073543	SHIELD	1	EA
3	3020048	SWITCH TOGGLE 4PDT (ON/ON) SELAED	1	EA
4	0151459	PLACARD	1	EA
5	0073544	CABLE 11O VOLT POWER AC GENERATOR	1	EA
6	5093008	CLIP CUSSION 1.05 VINYL COATED	2	EA
7	3040046	TERM, .250 MALE SLIP-ON F.I. 22/18 WIRE	4	EA
8	3040064	TERM MALE250FI 12/10	1	EA
9	0090757	WIRE 16 R61 FEM250FI 3	3	EA
10	0070747	WIRE 16 R61 R61 3	3	EA
11	0071517	WIRE 18 R6I FEM188I 13	3	EA
12	0071541	WIRE 12 R61 R101 14	1	EA
13	0181187	JUMPER WIRE	1	EA
14	0101247	1/2 INCH HYDRAULIC HOSE	1	EA
15	0100422	3/8 INCH HYDRAULIC HOSE	1	EA
16	3011801	WIRE 18GA SINGLE CONDUCTOR WHT-{SAE J558A - TYPE GPT}	1	EA
17	3090019	FLEXGUARD TUBE .250 ID (NOTE 4)	1	EA
18	3040047	TERM FEM250FI 22/18	1	EA
19	3044146	TERM R10I 22/18	1	EA
20	0151583	START UP AND TEST PROCEDURE	1	EA
21	0111287	HOSE - 4 - 4S - 4S 84 100R2	1	EA
22	3040452	BOOT	1	EA
23	5064001	FTG RDCR TUBE END -6S-4S	1	EA
24	5063905	FTG NUT -6S STL	1	EA

Courtesy of Crane.Market

Item	Part No.	Name	Qty	Uom
25	5036505	STRAIGHT THREAD BRANCH TEE	1	EA
26	0100271	HOSE-4-4S-4S 103 100R1	1	EA
27	5036706	FTG TEE RUN-8S-8S STL	1	EA
28	970909	BOLT HEXHD .500-13 1.50 GR5	2	EA
29	5560039	NUT LKG .500-13	2	EA
30	970009	BLT HEXHD .250-20 .500 GR5-	2	EA
31	986019	WASHER FLAT .250	2	EA
32	987099	WASHER LOCK .250	2	EA
33	3044158	TERM R6I 16/14	1	EA

Courtesy of Crane.Market

OPTIONS

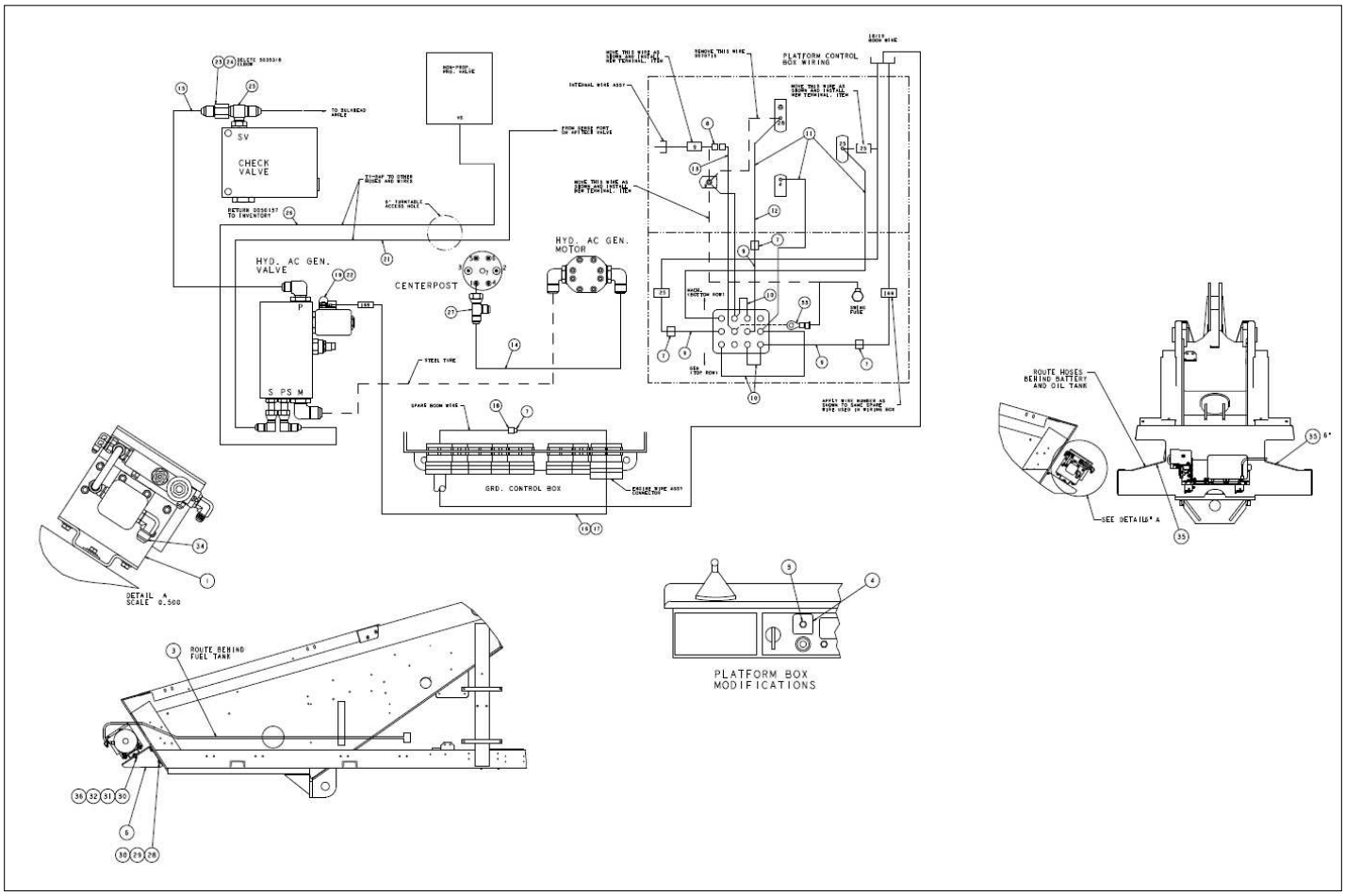

Courtesy of Crane.Market

Item	Part No.	Name	Qty	Uom
1	0151471	HYD AC GENERATOR SUB-ASSY	1	EA
3	3020048	SWITCH TOGGLE 4PDT (ON/ON) SELAED	1	EA
4	0151459	PLACARD	1	EA
5	0084085	CABLE ASSEMBLY AC GENERATOR	1	EA
6	0083954	BRKT 12KW GENERATOR	2	EA
7	3040064	TERM MALE250FI 12/10	1	EA
8	3040046	TERM, .250 MALE SLIP-ON F.I. 22/18 WIRE	4	EA
9	0090757	WIRE 16 R61 FEM250FI 3	3	EA
10	0070747	WIRE 16 R61 R61 3	3	EA
11	0071517	WIRE 18 R6I FEM188I 13	3	EA
12	0071541	WIRE 12 R61 R101 14	1	EA
13	0181187	JUMPER WIRE	1	EA
14	0080522	HOSE- -8-8S-8S 42 100R2	1	EA
15	0111286	HOSE -6-6S-6S 84 100R2	1	EA
16	3011801	WIRE 18GA SINGLE CONDUCTOR WHT-{SAE J558A - TYPE GPT}	15	EA
17	3090019	FLEXGUARD TUBE .250 ID (NOTE 4)	15	EA
18	3040047	TERM FEM250FI 22/18	1	EA
19	3044146	TERM R10I 22/18	1	EA
20	0151583	START UP AND TEST PROCEDURE	1	EA
21	0181163	1/4" HYDRAULIC HOSE	1	EA
22	3040452	BOOT	1	EA
23	5064001	FTG RDCR TUBE END -6S-4S	1	EA
24	5063905	FTG NUT -6S STL	1	EA
25	5036505	STRAIGHT THREAD BRANCH TEE	1	EA

Courtesy of Crane.Market

Item	Part No.	Name	Qty	Uom
26	0101896	HOSE-4-4S-4S 120 100R2	1	EA
27	5036706	FTG TEE RUN-8S-8S STL	1	EA
28	970909	BOLT HEXHD .500-13 1.50 GR5	4	EA
29	5560039	NUT LKG .500-13	4	EA
30	986359	WASHER 1/2 MEDIUM FLAT	10	EA
31	970269	BOLT .313-18 1.25 GR. 5	2	EA
32	986269	WASHER 5/16 MEDIUM FLAT	4	EA
33	3044158	TERM R6I 16/14	1	EA
34	5035306	STRAIGHT THREAD 90° ELBOW	1	EA
35	5560277	HOSE GUIDE .375 RUBBER EDGE	1	EA
36	5560031	NUT HEX LKG .313-18	2	EA

Courtesy of Crane.Market

OPTIONS

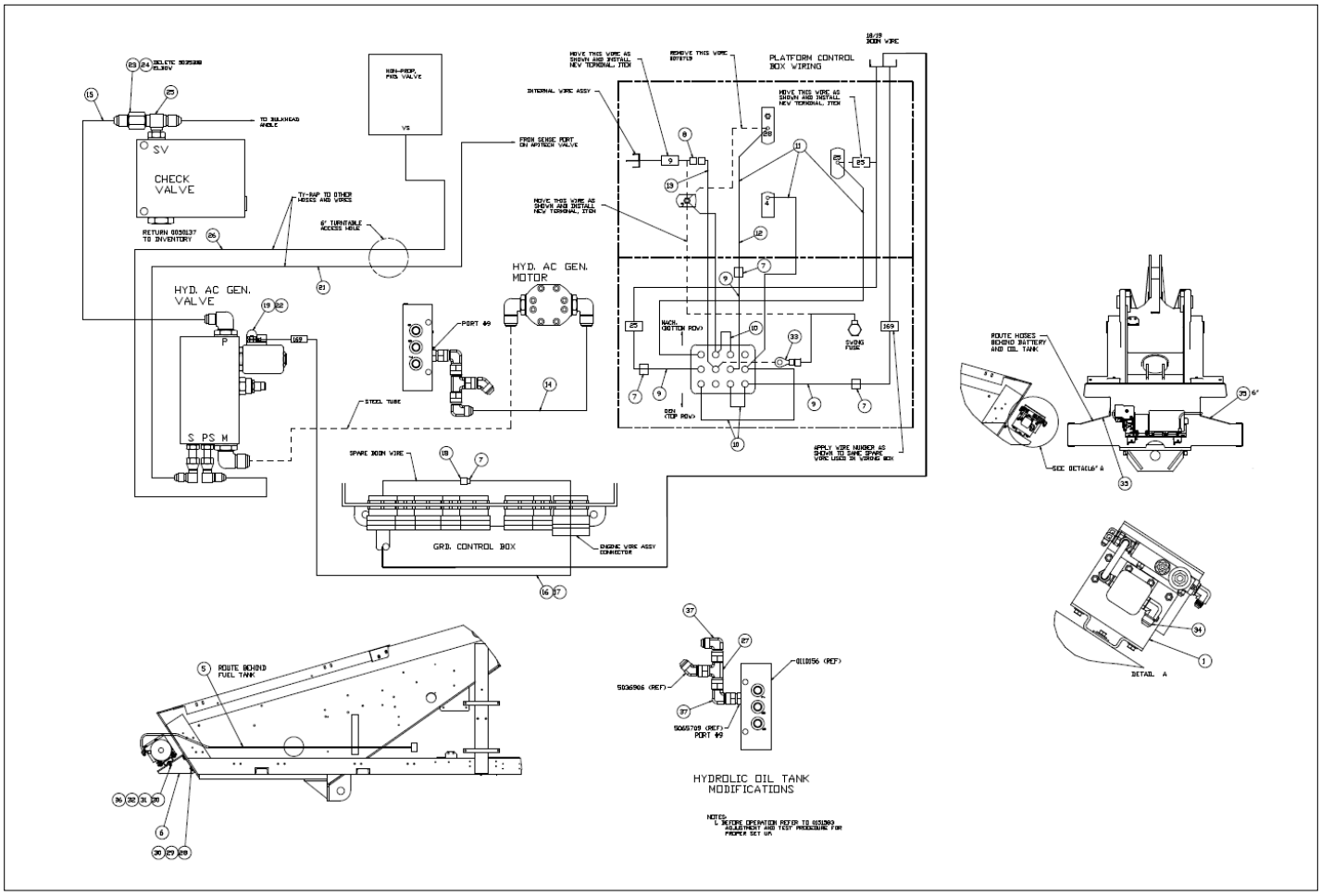

Courtesy of Crane.Market

Item	Part No.	Name	Qty	Uom
1	0151471	HYD AC GENERATOR SUB-ASSY	1	EA
3	3020048	SWITCH TOGGLE 4PDT (ON/ON) SELAED	1	EA
4	0151459	PLACARD	1	EA
5	0084085	CABLE ASSEMBLY AC GENERATOR	1	EA
6	0083954	BRKT 12KW GENERATOR	2	EA
7	3040064	TERM MALE250FI 12/10	1	EA
8	3040046	TERM, .250 MALE SLIP-ON F.I. 22/18 WIRE	4	EA
9	0090757	WIRE 16 R61 FEM250FI 3	3	EA
10	0070747	WIRE 16 R61 R61 3	3	EA
11	0071517	WIRE 18 R6I FEM188I 13	3	EA
12	0071541	WIRE 12 R61 R101 14	1	EA
13	0181187	JUMPER WIRE	1	EA
14	0110198	HOSE-8-8S-8S 96 100R2	1	EA
15	0111286	HOSE -6-6S-6S 84 100R2	1	EA
16	3011801	WIRE 18GA SINGLE CONDUCTOR WHT-{SAE J558A - TYPE GPT}	15	EA
17	3090019	FLEXGUARD TUBE .250 ID (NOTE 4)	15	EA
18	3040047	TERM FEM250FI 22/18	1	EA
19	3044146	TERM R10I 22/18	1	EA
20	0151583	START UP AND TEST PROCEDURE	1	EA
21	0181163	1/4" HYDRAULIC HOSE	1	EA
22	3040452	BOOT	1	EA
23	5064001	FTG RDCR TUBE END -6S-4S	1	EA
24	5063905	FTG NUT -6S STL	1	EA
25	5036505	STRAIGHT THREAD BRANCH TEE	1	EA

Courtesy of Crane.Market

Item	Part No.	Name	Qty	Uom
26	0101896	HOSE-4-4S-4S 120 100R2	1	EA
27	5036706	FTG TEE RUN-8S-8S STL	1	EA
28	970909	BOLT HEXHD .500-13 1.50 GR5	4	EA
29	5560039	NUT LKG .500-13	4	EA
30	986359	WASHER 1/2 MEDIUM FLAT	10	EA
31	970269	BOLT .313-18 1.25 GR. 5	2	EA
32	986269	WASHER 5/16 MEDIUM FLAT	4	EA
33	3044158	TERM R6I 16/14	1	EA
34	5035306	STRAIGHT THREAD 90° ELBOW	1	EA
35	5560277	HOSE GUIDE .375 RUBBER EDGE	1	EA
36	5560031	NUT HEX LKG .313-18	2	EA
37	5037006	FTG ELB90SWVL-8S-8S STL	2	EA

Courtesy of Crane.Market

OPTIONS

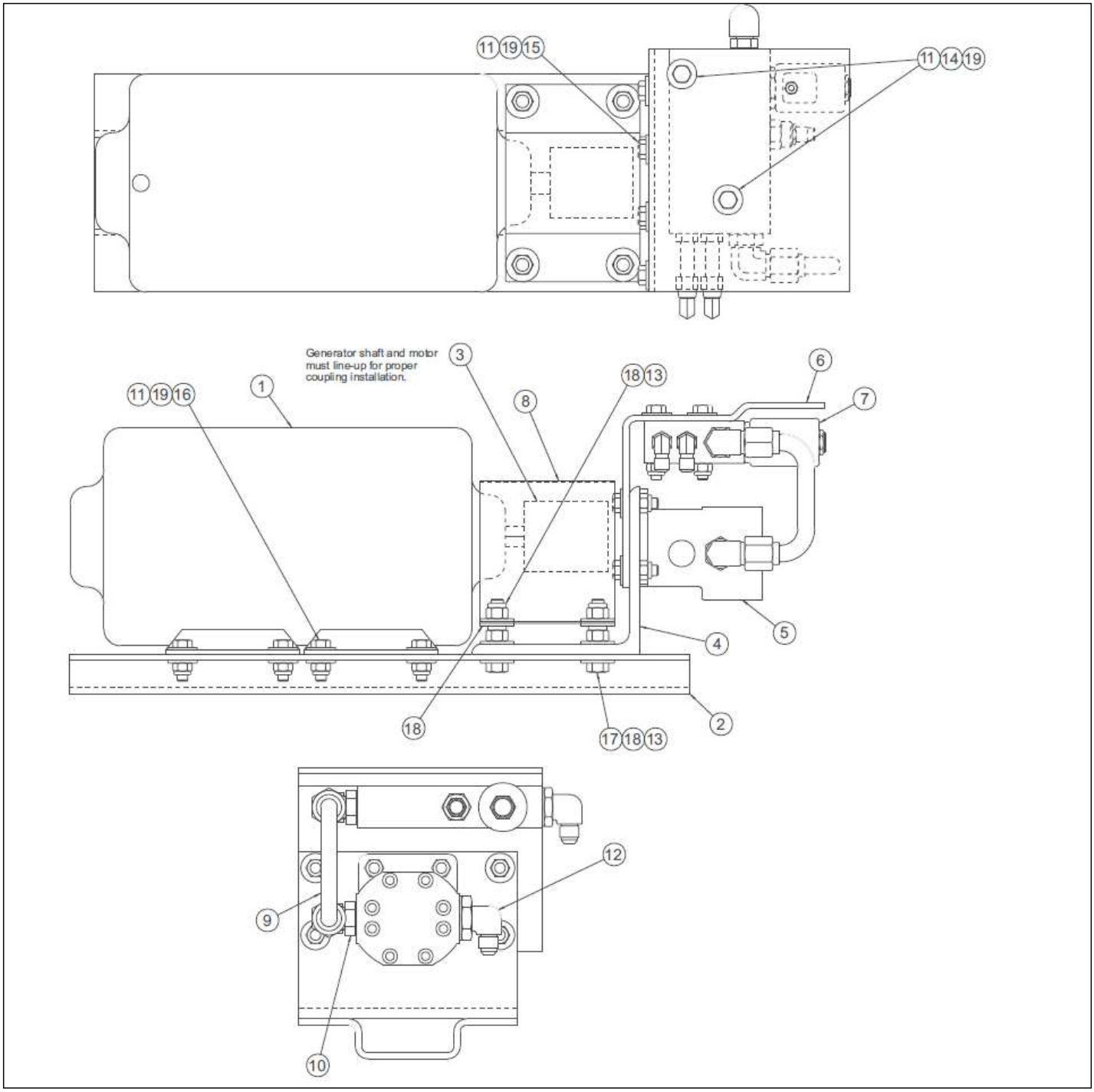

Courtesy of Crane.Market

Item	Part No.	Name	Qty	Uom
1	3080001	GENERATOR	1	EA
2	0151457	MOUNT PLATE	1	EA
3	7240012	COUPLING	1	EA
4	0151458	MOUNTING ANGLE, MOTOR	1	EA
5	6030029	MOTOR, HYDRAULIC	1	EA
Not Shown	8020018	SEAL KIT	1	EA
6	0151469	MOUNTING BRACKET, VALVE	1	EA
7	0152831	AC GENERATOR VALVE	1	EA
8	0151484	COVER, COUPLING	1	EA
9	0151470	1/2” OD TUBE ASSEMBLY	1	EA
10	5035306	STRAIGHT THREAD 90° ELBOW	1	EA
11	5560031	NUT HEX LKG .313-18	18	EA
12	5035320	STRAIGHT THREAD 90° ELBOW	1	EA
13	5560033	NUT HEXHD .375-16 LKG	8	EA
14	970299	CAPSCREW 5/16-18 X 2 LG HH	2	EA
15	970269	BOLT .313-18 1.25 GR. 5	8	EA
16	970369	CAPSCREW 5/16-18	8	EA
17	970499	BOLT HEXHD .375-16 1.75 GR. 5	4	EA
18	986299	BOLT HEXHD .313-18 2.50 GR. 5	12	EA
19	986269	WASHER 5/16 MEDIUM FLAT	30	EA

Courtesy of Crane.Market

OPTIONS

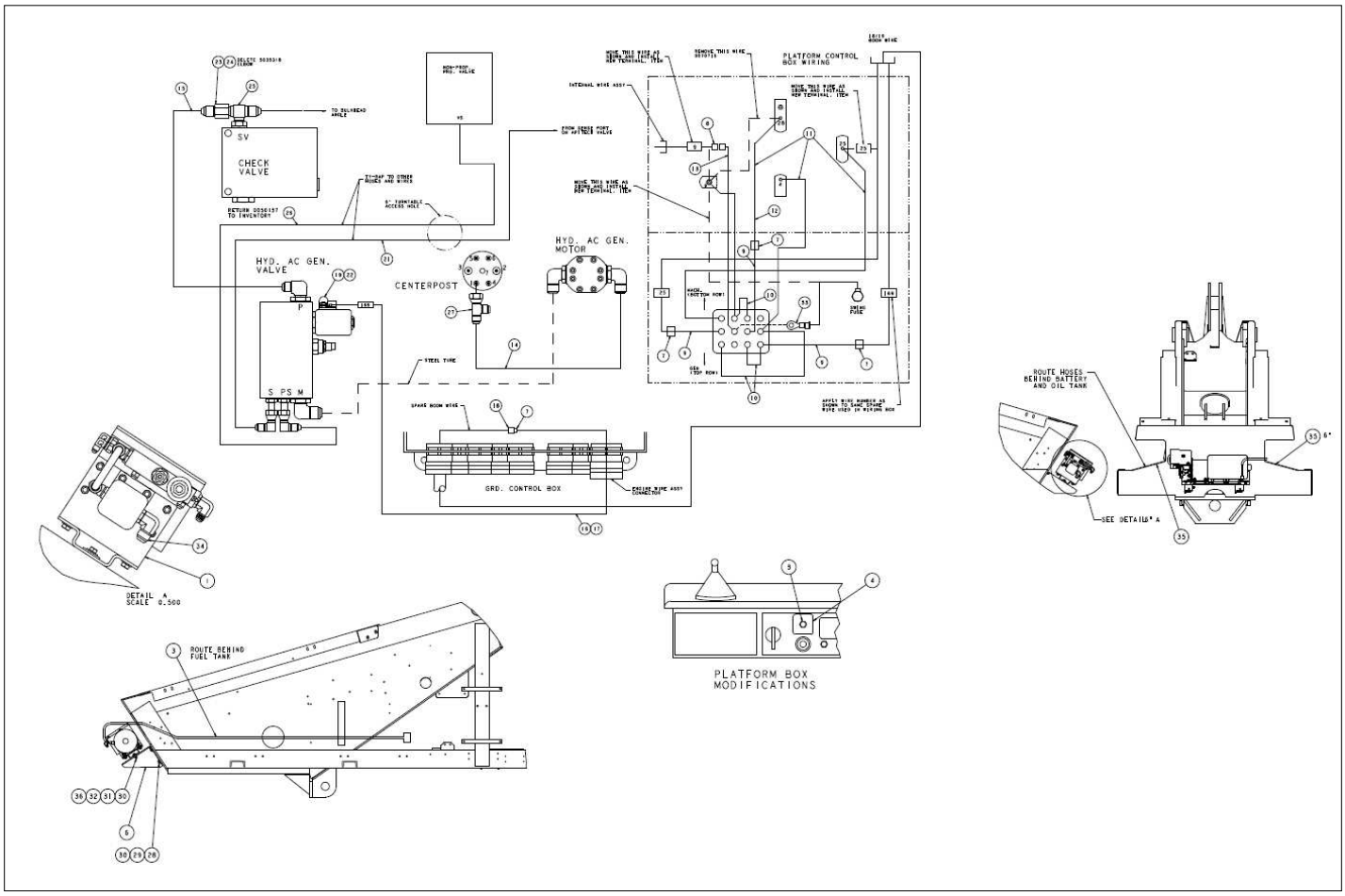

Courtesy of Crane.Market

Item	Part No.	Name	Qty	Uom
1	0151471	HYD AC GENERATOR SUB-ASSY	1	EA
3	3020048	SWITCH TOGGLE 4PDT (ON/ON) SELAED	1	EA
4	0151459	PLACARD	1	EA
5	0084085	CABLE ASSEMBLY AC GENERATOR	1	EA
6	0083954	BRKT 12KW GENERATOR	2	EA
7	3040064	TERM MALE250FI 12/10	1	EA
8	3040046	TERM, .250 MALE SLIP-ON F.I. 22/18 WIRE	4	EA
9	0090757	WIRE 16 R61 FEM250FI 3	3	EA
10	0070747	WIRE 16 R61 R61 3	3	EA
11	0071517	WIRE 18 R6I FEM188I 13	3	EA
12	0071541	WIRE 12 R61 R101 14	1	EA
13	0181187	JUMPER WIRE	1	EA
14	0080522	HOSE- -8-8S-8S 42 100R2	1	EA
15	0111286	HOSE -6-6S-6S 84 100R2	1	EA
16	3011801	WIRE 18GA SINGLE CONDUCTOR WHT-{SAE J558A - TYPE GPT}	15	EA
17	3090019	FLEXGUARD TUBE .250 ID (NOTE 4)	15	EA
18	3040047	TERM FEM250FI 22/18	1	EA
19	3044146	TERM R10I 22/18	1	EA
20	0151583	START UP AND TEST PROCEDURE	1	EA
21	0181163	1/4" HYDRAULIC HOSE	1	EA
22	3040452	BOOT	1	EA
23	5064001	FTG RDCR TUBE END -6S-4S	1	EA
24	5063905	FTG NUT -6S STL	1	EA
25	5036505	STRAIGHT THREAD BRANCH TEE	1	EA

Courtesy of Crane.Market

Item	Part No.	Name	Qty	Uom
26	0101896	HOSE-4-4S-4S 120 100R2	1	EA
27	5036706	FTG TEE RUN-8S-8S STL	1	EA
28	970909	BOLT HEXHD .500-13 1.50 GR5	4	EA
29	5560039	NUT LKG .500-13	4	EA
30	986359	WASHER 1/2 MEDIUM FLAT	10	EA
31	970269	BOLT .313-18 1.25 GR. 5	2	EA
32	986269	WASHER 5/16 MEDIUM FLAT	4	EA
33	3044158	TERM R6I 16/14	1	EA
34	5035306	STRAIGHT THREAD 90° ELBOW	1	EA
35	5560277	HOSE GUIDE .375 RUBBER EDGE	1	EA
36	5560031	NUT HEX LKG .313-18	2	EA

Courtesy of Crane.Market

OPTIONS

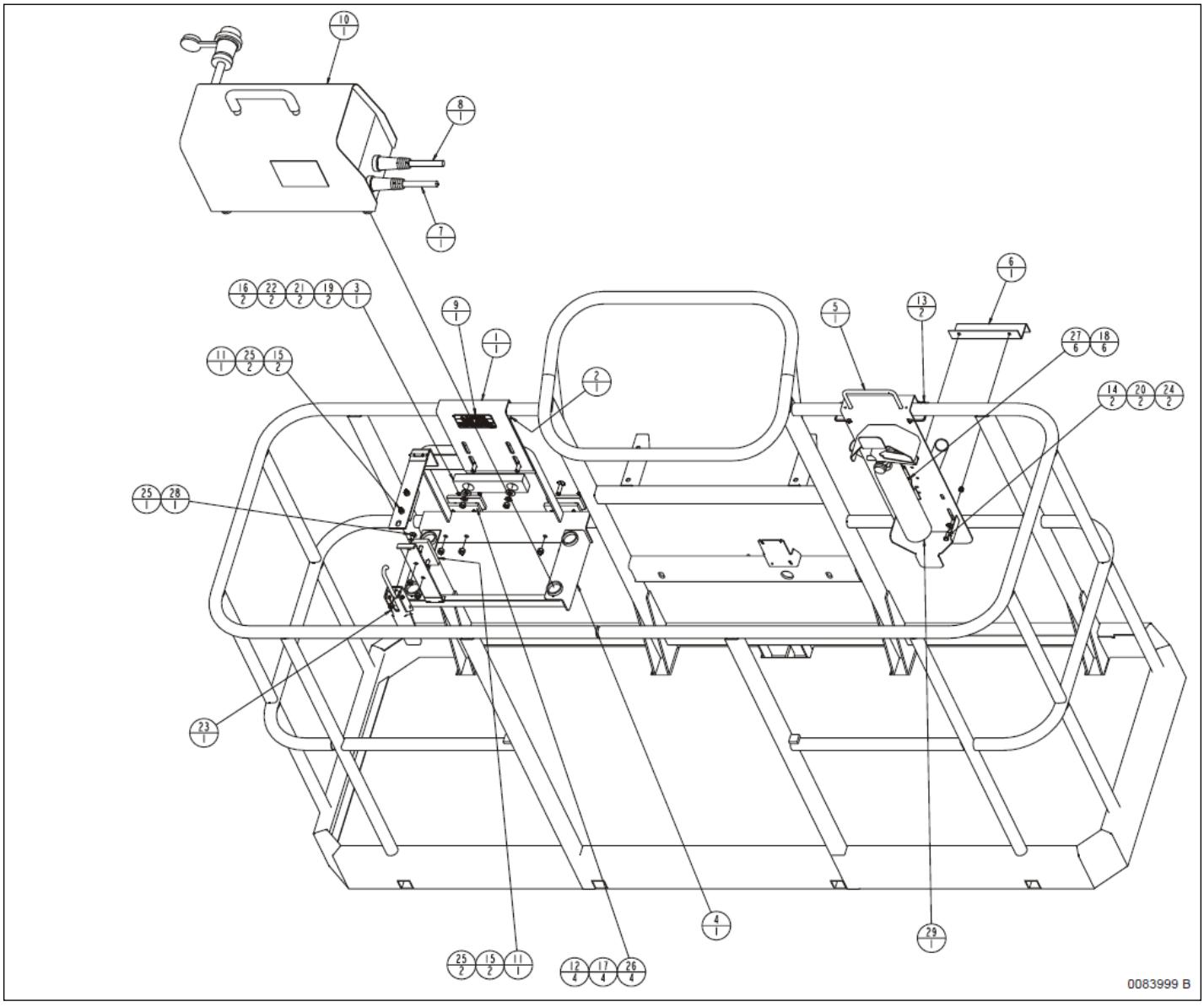

Courtesy of Crane.Market

Item	Part No.	Name	Qty	Uom
1	0083823	BRACKET, TOP	1	EA
2	0083825	BRACKET, LOWER	1	EA
3	0083826	SLIDE PAD 2.0 X 8.25 X 1.0	1	EA
4	0083833	WELDMENT, WELDER SUPPORT	1	EA
5	0083857	WELDMENT, BRACKET CABLE STORAGE	1	EA
6	0083858	BRACKET	1	EA
7	0083862	ASSEMBLY, ELECTRODE HOLDER WIRE	1	EA
8	0083863	ASSEMBLY, GROUND WIRE	1	EA
9	0083985	PLACARD, TIPPING HAzARD	1	EA
10	0084084	WELDER ASSEMBLY	1	EA
11	0150121	SLIDE PAD 2.0 X 4.0 X .500	2	EA
12	0161766	SLIDE PAD 2.0 X 4.0 X .38	4	EA
13	302544	SNAP PIN W/ LANYARD .375 X 2.25	2	EA
14	970029	CAPSCREW 1/4-20 X 3/4 INCH LONG HEX HEAD GRADE 5	2	EA
15	972259	BLT FLSKTHD .313-18 1.00	4	EA
16	972439	BOLT CRG .375-16 1.25	2	EA
17	972489	3/8-16NC 1 1/2 LARGE FLAT SOCKET HD	4	EA
18	974659	SCREW RHD #10-24 X .50 PLATED	6	EA
19	984109	NUT HEXHD .375-16	2	EA
20	986019	WASHER FLAT .250	2	EA
21	986299	BOLT HEXHD .313-18 2.50 GR. 5	2	EA
22	987119	BOLT HEXHD .375-16 1.75 GR. 5	2	EA
23	5516329	LATCH, ADJ DRAW	1	EA
24	5560004	NUT HEXHD .250-20 LKG	2	EA

Courtesy of Crane.Market

Item	Part No.	Name	Qty	Uom
25	5560031	NUT HEX LKG .313-18	5	EA
26	5560033	NUT HEXHD .375-16 LKG	4	EA
27	5560034	NUT HEX LKG 10-24	6	EA
28	5560372	BOLT CRG .313-18 .75 GR5	1	EA
29	9939464	FIRE EXTINGUISHER	1	EA

Courtesy of Crane.Market

OPTIONS

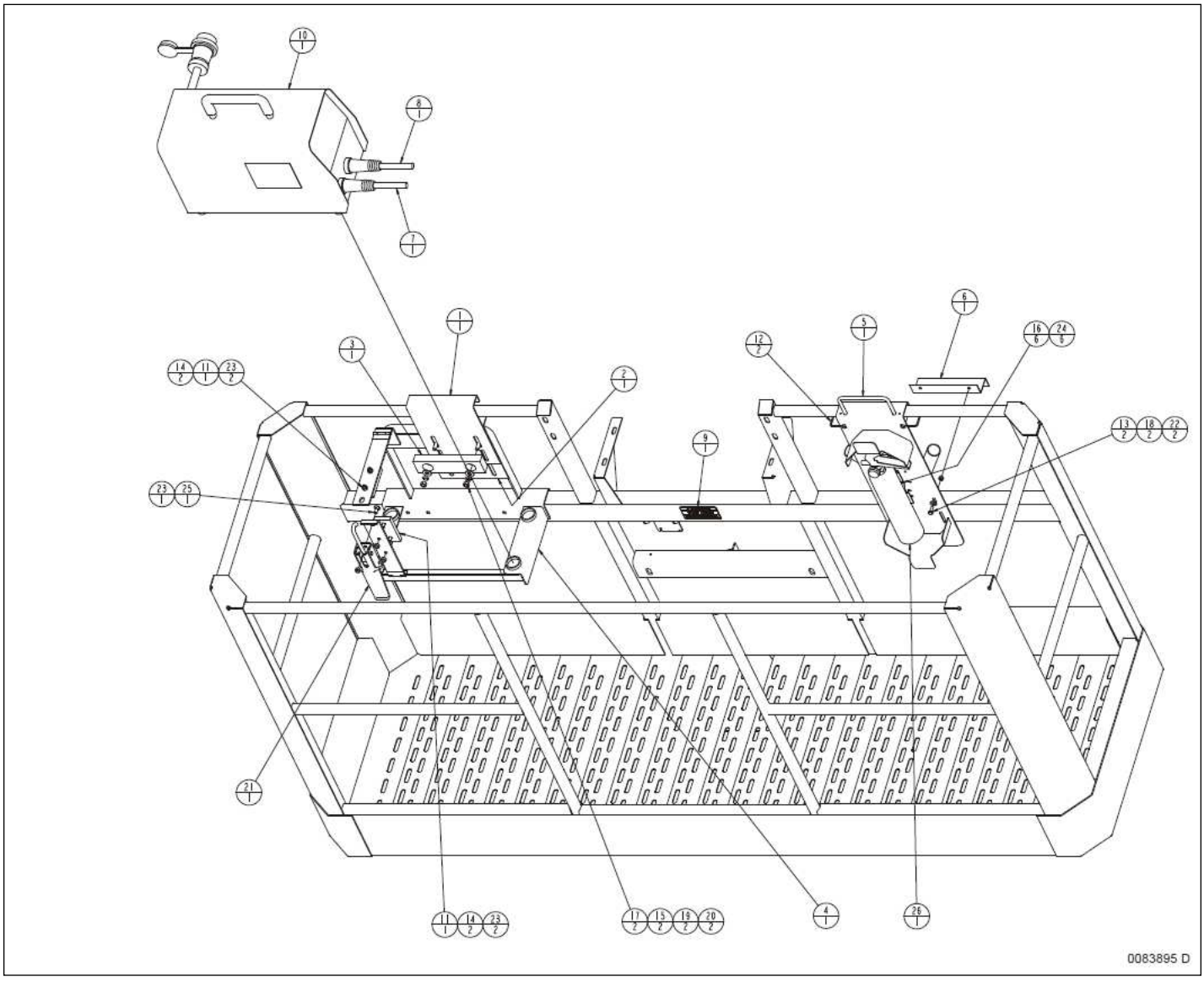

Courtesy of Crane.Market

Item	Part No.	Name	Qty	Uom
1	0083823	BRACKET, TOP	1	EA
2	0083825	BRACKET, LOWER	1	EA
3	0083826	SLIDE PAD 2.0 X 8.25 X 1.0	1	EA
4	0083833	WELDMENT, WELDER SUPPORT	1	EA
5	0083857	WELDMENT, BRACKET CABLE STORAGE	1	EA
6	0083858	BRACKET	1	EA
7	0083862	ASSEMBLY, ELECTRODE HOLDER WIRE	1	EA
8	0083863	ASSEMBLY, GROUND WIRE	1	EA
9	0083985	PLACARD, TIPPING HAzARD	1	EA
10	0084084	WELDER ASSEMBLY	1	EA
11	0150121	SLIDE PAD 2.0 X 4.0 X .500	2	EA
12	302544	SNAP PIN W/ LANYARD .375 X 2.25	2	EA
13	970029	CAPSCREW 1/4-20 X 3/4 INCH LONG HEX HEAD GRADE 5	2	EA
14	972259	BLT FLSKTHD .313-18 1.00	4	EA
15	972439	BOLT CRG .375-16 1.25	2	EA
16	974659	SCREW RHD #10-24 X .50 PLATED	4	EA
17	984109	NUT HEXHD .375-16	2	EA
18	986019	WASHER FLAT .250	2	EA
19	986299	BOLT HEXHD .313-18 2.50 GR. 5	2	EA
20	987119	BOLT HEXHD .375-16 1.75 GR. 5	2	EA
21	5516329	LATCH, ADJ DRAW	1	EA
22	5560004	NUT HEXHD .250-20 LKG	2	EA
23	5560031	NUT HEX LKG .313-18	5	EA
24	5560034	NUT HEX LKG 10-24	6	EA
25	5560372	BOLT CRG .313-18 .75 GR5	1	EA

Courtesy of Crane.Market

Item	Part No.	Name	Qty	Uom
26	9939464	FIRE EXTINGUISHER	1	EA

Courtesy of Crane.Market

OPTIONS

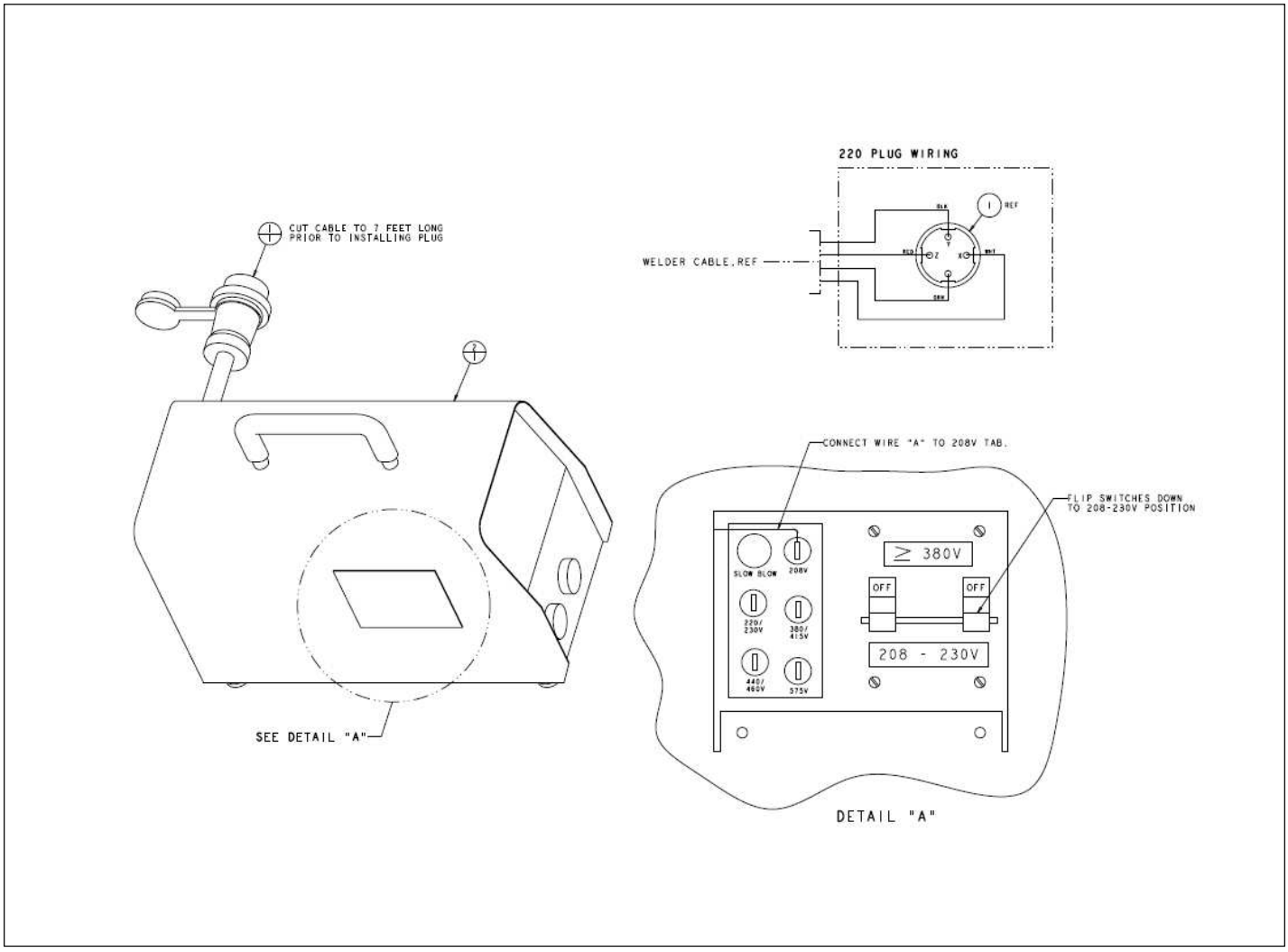

Courtesy of Crane.Market

Item	Part No.	Name	Qty	Uom
1	3045255	PLUG 3 POLE 4 COND 30 AMP	1	EA
2	3220006	WELDER 275 AMP STICK LINCOLN V275-S	1	EA

Courtesy of Crane.Market

OPTIONS

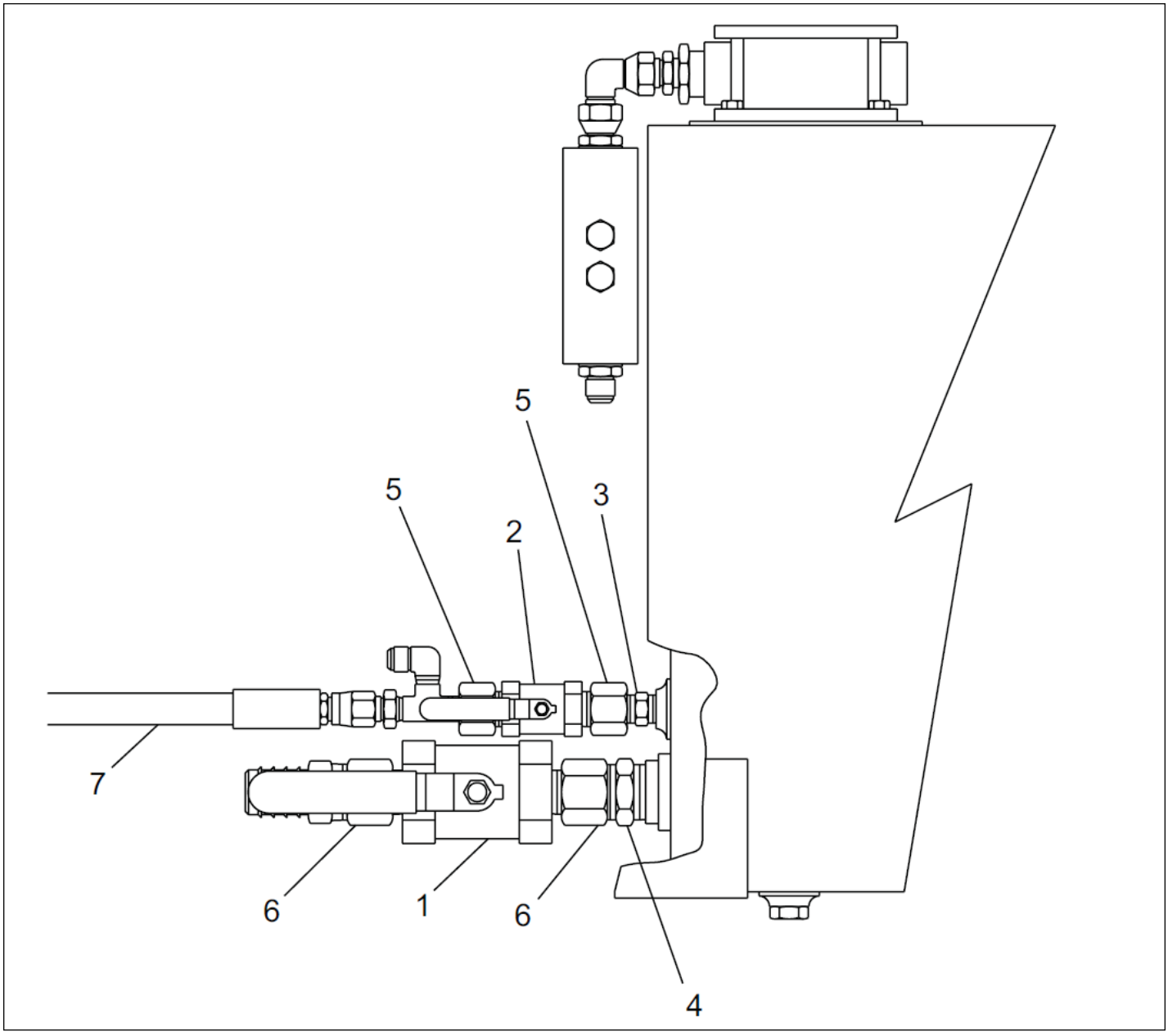

Courtesy of Crane.Market

Item	Part No.	Name	Qty	Uom
1	6010495	BALL VALVE, 3/4 NPT	1	EA
2	6010498	BALL VALVE, 1-1/2 NPT	1	EA
3	7740014	CLOSE NIPPLE 1/2 NPT	1	EA
4	7740110	CLOSE NIPPLE 1-1/4 NPT	1	EA
5	7720604	REDUCER BUSHING 3/4 X 1/2	2	EA
6	7721210	REDUCER BUSHING 1-1/2 X 1-1/4	2	EA
7	0070792	HOSE -8-8S-8S 32 100R2	1	EA

Courtesy of Crane.Market

OPTIONS

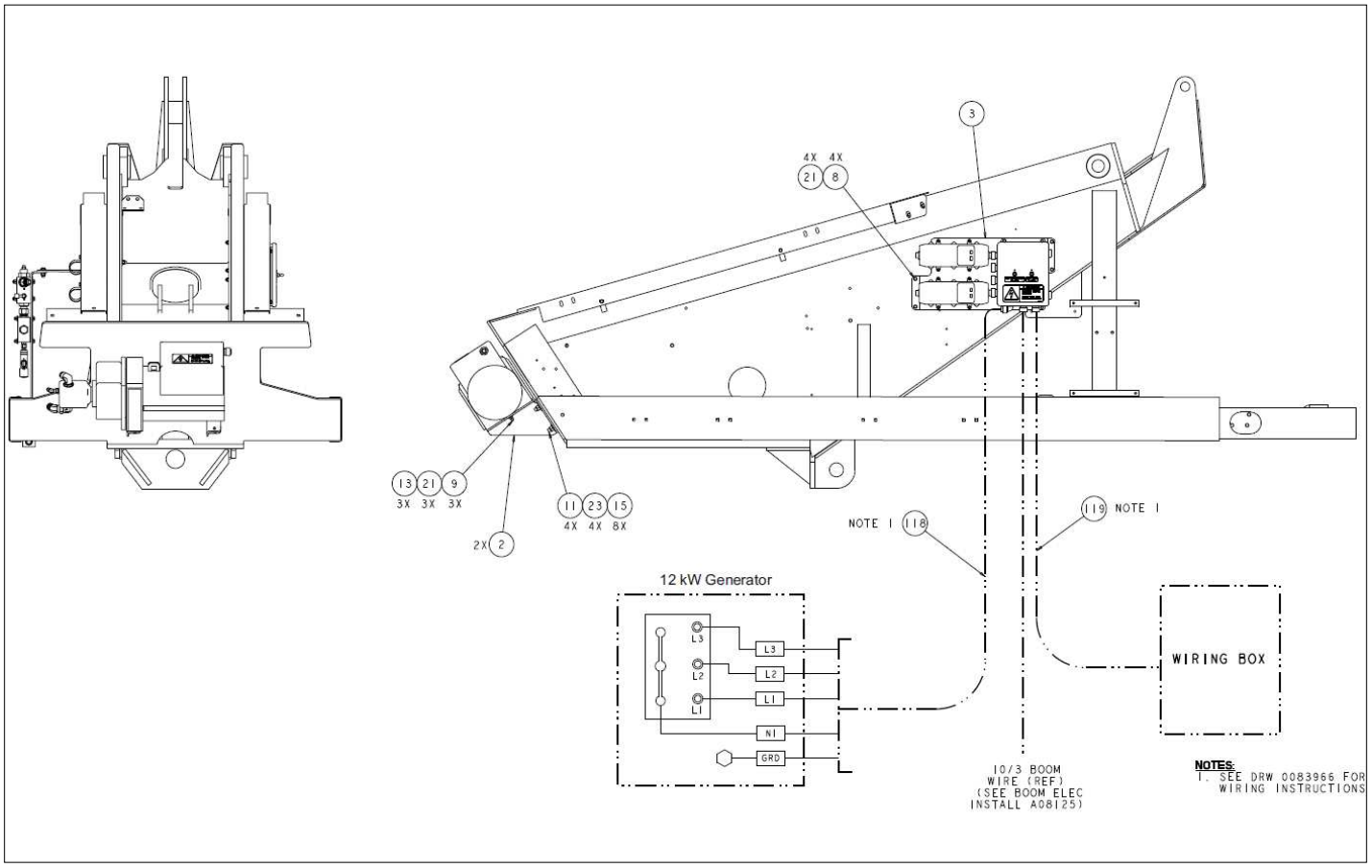

Courtesy of Crane.Market

Item	Part No.	Name	Qty	Uom
1	0080759	BRACKET	2	EA
2	0083954	BRKT 12KW GENERATOR	2	EA
3	0083966	ASSEMBLY,12KW GENERATOR CIRCUIT BREAKER WIRING	1	EA
4	0083982	BRACE, VALVE BRACKET	1	EA
5	0083984	VALVE ASSEMBLY, 11KW GENERATOR – REFER TO OPTIONS – 115	1	EA
6	0083989	ASSEMBLY, 12KW GENERATOR	1	EA
7	970049	BOLT HEXHD .250-20 1.00 GR. 5	4	EA
8	970369	CAPSCREW 5/16-18	8	EA
9	970269	BOLT .313-18 1.25 GR. 5	3	EA
10	970489	CAPSCREW 3/8-16 X 1-1/2 INCH LONG HEX HEAD GRADE 5	1	EA
11	970919	BLT HEXHD .500-13 1.75 GR5	4	EA
12	972439	BOLT CRG .375-16 1.25	2	EA
13	986269	WASHER 5/16 MEDIUM FLAT	7	EA
14	986299	BOLT HEXHD .313-18 2.50 GR. 5	5	EA
15	986359	WASHER 1/2 MEDIUM FLAT	8	EA
16	5093008	CLIP CUSSION 1.05 VINYL COATED	2	EA
17	5093013	CLAMP, CUSHION #32 (2")	2	EA
18	5260013	HOSE END, 1/2NPT/1/2 BARKED	2	EA
19	5550010	CLAMP	2	EA
20	5560004	NUT HEXHD .250-20 LKG	4	EA
21	5560031	NUT HEX LKG .313-18	11	EA
22	5560033	NUT HEXHD .375-16 LKG	4	EA
23	5560039	NUT LKG .500-13	4	EA
24	5560704	BOLT, HEXHD .375-16 1.25 GR8	1	EA

Courtesy of Crane.Market

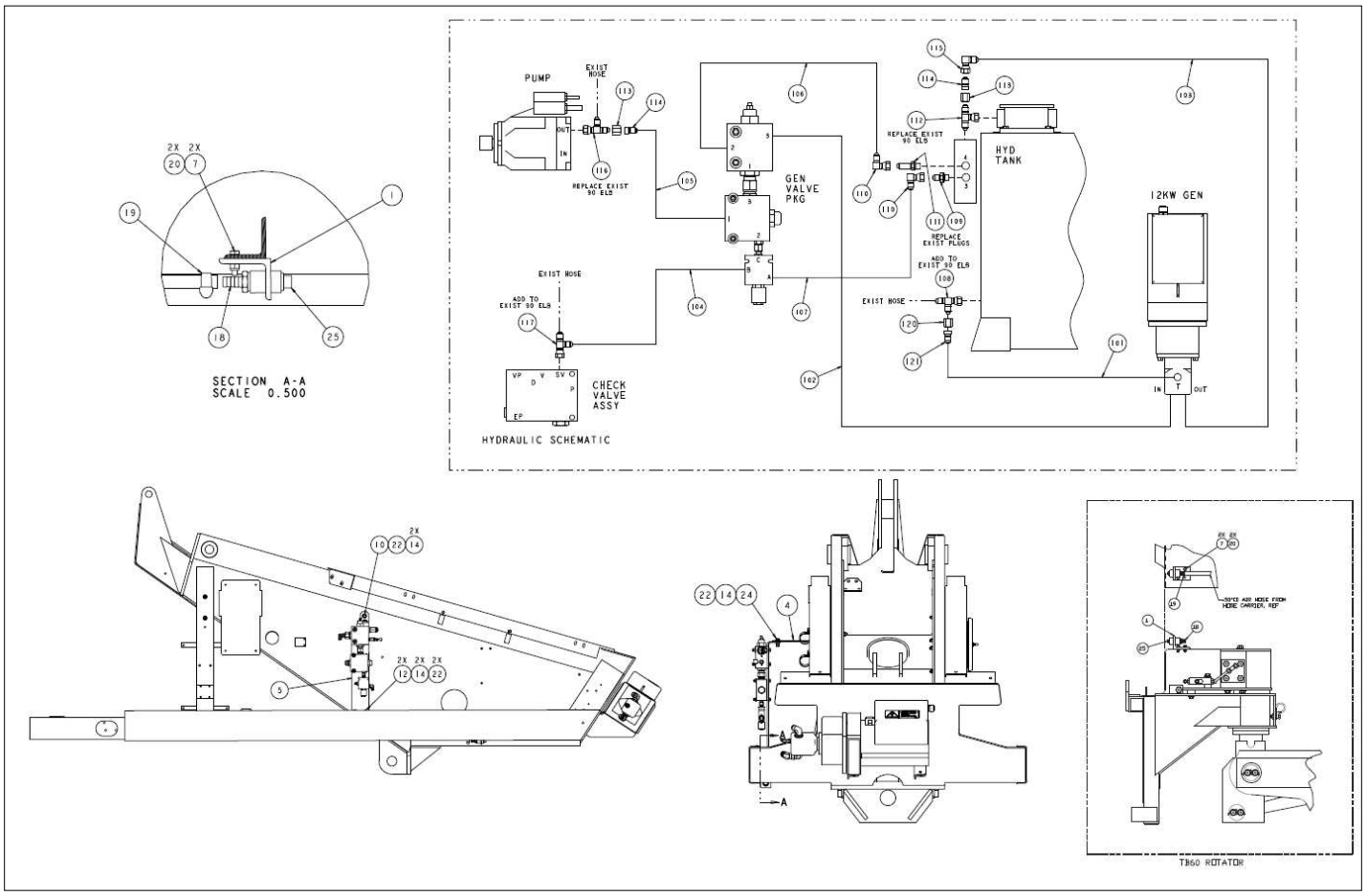

Courtesy of Crane.Market

Item	Part No.	Name	Qty	Uom
25	7714204	PLUG, 1/2NPT SQHD	2	EA
101	0080362	HOSE -6-6S-6S 93.5 100R2	1	EA
102	0083986	HOSE -12-12S-12S 68	1	EA
103	0400497	3/4 INCH HYDRAULIC HOSE	1	EA
104	0100278	1/4 INCH HYDRAULIC HOSE - (FORD)	1	EA
105	0110171	HOSE -6-6S-6S 22	1	EA
106	0020270	HOSE -6-6S-6S 22 100R2	1	EA
107	0050137	HOSE -4-4S-4S 36	1	EA
108	5036706	FTG TEE RUN-8S-8S STL	1	EA
109	5065705	FTG, ADAPTER STRTHD -6B-4S STL	1	EA
110	5037003	SWIVEL NUT 90° ELBOW	2	EA
111	5065805	FTG ADAPTER STRTHD -LG-6B-6S	1	EA
112	5036810	FTG TEESWVLBR-16S-16S	1	EA
113	5063910	FTG NUT-16S	2	EA
114	5064009	FTG RDCR -16S-12S	2	EA
115	5037008	FTG ELB90SWVL-12S-12S STL	1	EA
116	5036710	FTG TEE SWVL RUN-16S-16S STL-B	1	EA
117	5036703	SWIVEL NUT RUN TEE	1	EA
118	0083970	WIRE ASSEMBLY, 12KW GENERATOR	1	EA
119	0083971	WIRE ASSEMBLY, WIRING BOX	1	EA
120	5063906	FTG NUT-8 STL	1	EA
121	5064003	FTG REDUCER TUBE END-8S-6S STL	1	EA

Courtesy of Crane.Market

OPTIONS

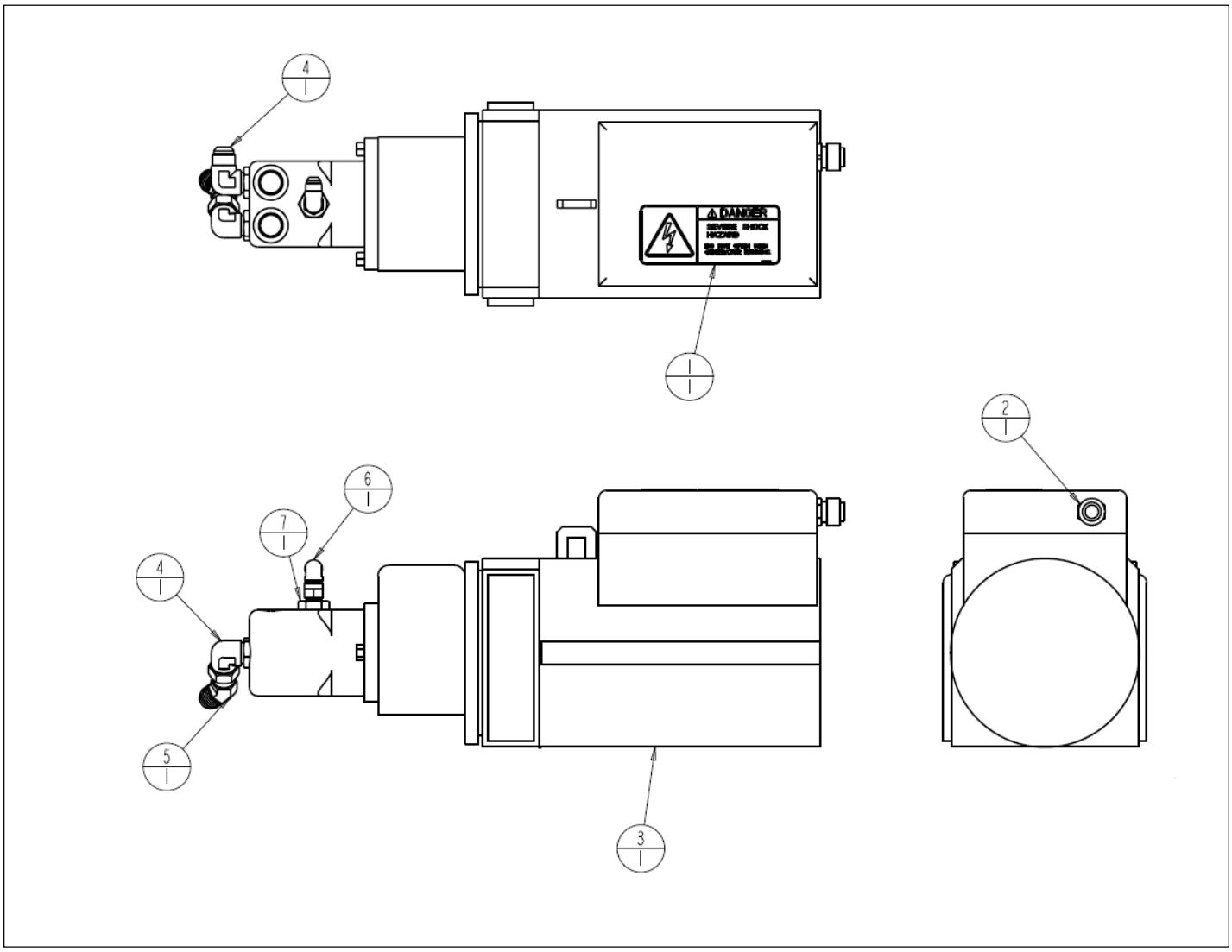

Courtesy of Crane.Market

Item	Part No.	Name	Qty	Uom
1	0083988	DECAL DANGER SHOCK HAZARD	1	EA
2	962839	CONDUIT FTG1/2IN STR LIQ TIGHT	1	EA
3	3087786	GENERATOR 12KW	1	EA
Not Shown	6029643	PUMP FABCO 12KW (ONLY)	1	EA
4	5035308	FTG ELB90STRTHD-12B-12S STL	2	EA
5	5036908	FTG ELB45SWVL-12S-12S STL	1	EA
6	5037006	FTG ELB90SWVL-8S-8S STL	1	EA
7	5065711	FTG ADPTR STRTHD-12B-8S STL	1	EA

Courtesy of Crane.Market

OPTIONS

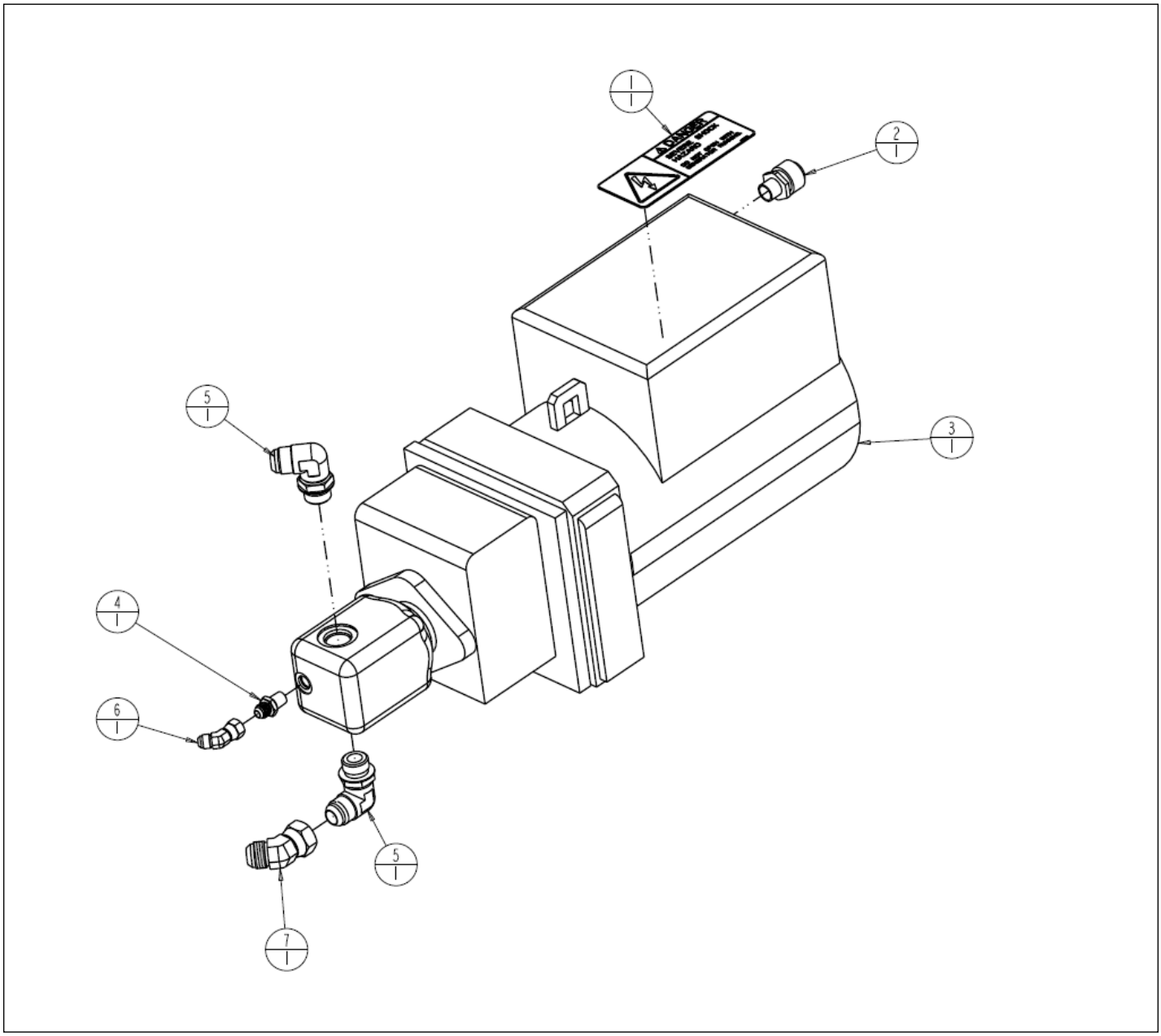

Courtesy of Crane.Market

Item	Part No.	Name	Qty	Uom
1	0083988	DECAL DANGER SHOCK HAZARD	1	EA
2	962839	CONDUIT FTG1/2IN STR LIQ TIGHT	1	EA
3	3087797	GENERATOR 12KW WITH HYD MTR	1	EA
Not Shown	6029642	PUMP TENDAIRE 12KW (ONLY)	1	EA
4	5033608	MALE ADAPTER	1	EA
5	5035308	FTG ELB90STRTHD-12B-12S STL	2	EA
6	5036905	FTG ELB45SWVL-6S-6S STL	1	EA
7	5036908	FTG ELB45SWVL-12S-12S STL	1	EA

Courtesy of Crane.Market

OPTIONS

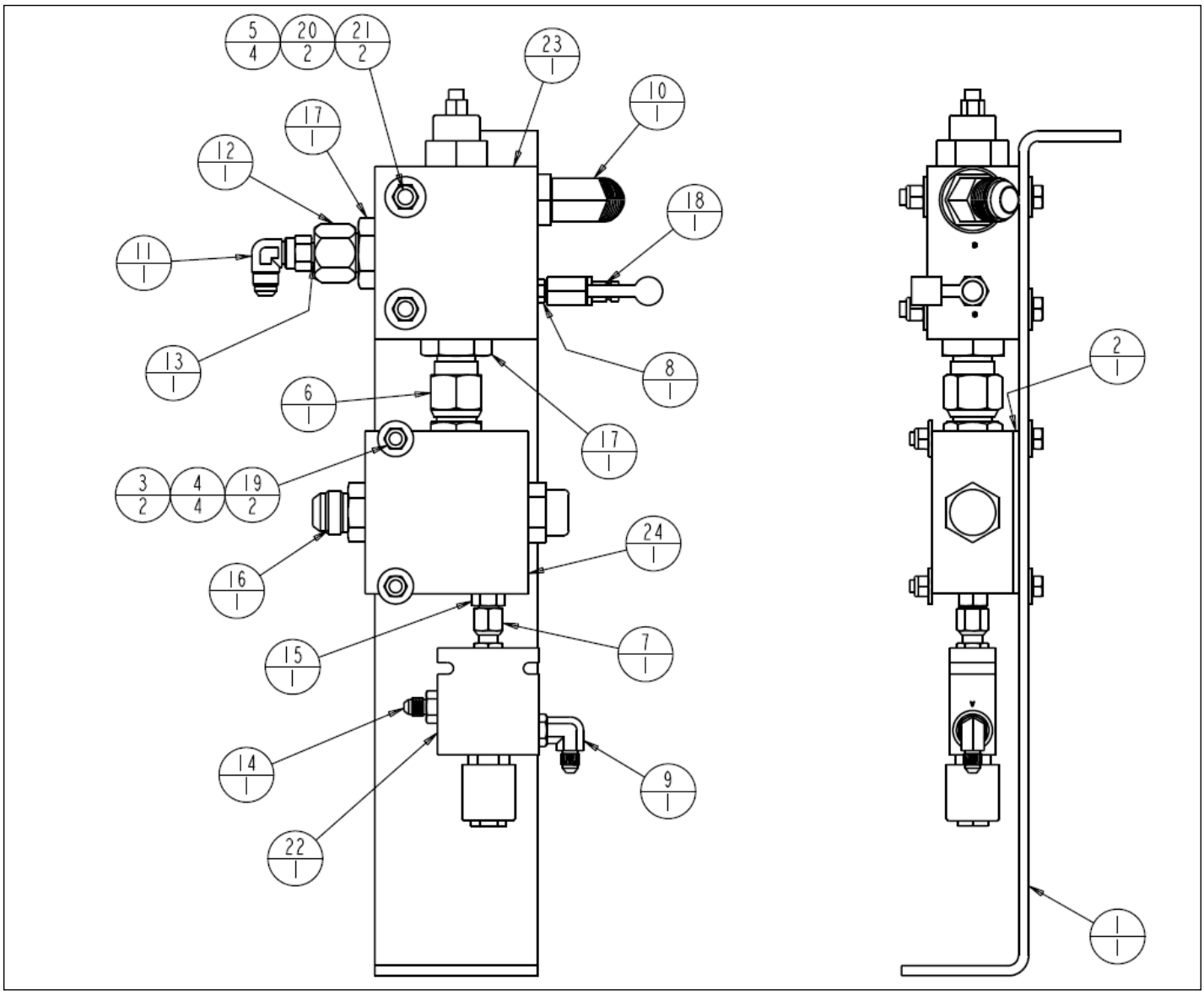

Courtesy of Crane.Market

Item	Part No.	Name	Qty	Uom
1	0083981	BRKT VALVE MNTG 11KW GEN	1	EA
2	0083983	SPCR 10GA 4.00 4.00 STL SP VALVE	1	EA
3	970119	BLT HEXHD .313-18 3.00 GR5	2	EA
4	986269	WASHER 5/16 MEDIUM FLAT	4	EA
5	986299	BOLT HEXHD .313-18 2.50 GR. 5	4	EA
6	5025001	FTG ADPTR SWVL-12B-12S STL	1	EA
7	5025003	FTG ADPTR SWVL-6B-6S STL	1	EA
8	5033604	ADAPTER STRAIGHT 1/4 NPTF TO -4 JIC	1	EA
9	5035318	FTG. ELB90STRTHD-6B-4S	1	EA
10	5035708	STRAIGHT THREAD 45° ELBOW	1	EA
11	5037005	FTG ELB90SWVL-6S-6S STL	1	EA
12	5063908	FTG NUT-12S STL	1	EA
13	5064007	TUBE END REDUCER	1	EA
14	5065705	FTG, ADAPTER STRTHD -6B-4S STL	1	EA
15	5065707	STRAIGHT THREAD ADAPTER - (CENTERPOST PORTS NO 5 AND NO 6) (FITTINGS NOT SHOWN, PORTS MARKED ON PARTS)	1	EA
16	5065714	FTG ADPTR STRTHD-12B-12S STL-P	1	EA
17	5065715	FTG ADPTR STRTHD-16B-12S STL-B	2	EA
18	5070005	NIPPLE-DIAGNOSTIC -4 JIC FEM	1	EA
19	5560031	NUT HEX LKG .313-18	2	EA
20	5560033	NUT HEXHD .375-16 LKG	2	EA
21	5560643	CAP SCREW 3/8-16 X 3-1/4 INCH LONG HEX HEAD GRADE 5	2	EA
22	6019064	VALVE 2 POS 3 WAY 12VDC	1	EA

Courtesy of Crane.Market

Item	Part No.	Name	Qty	Uom
23	6019065	FLOW CONTROL VALVE BYPASS	1	EA
24	6019066	LOGIC ELEMENT VALVE	1	EA
Not Shown	8080162	CARTRIDGE HYDRAFORCE	1	EA

Courtesy of Crane.Market

OPTIONS

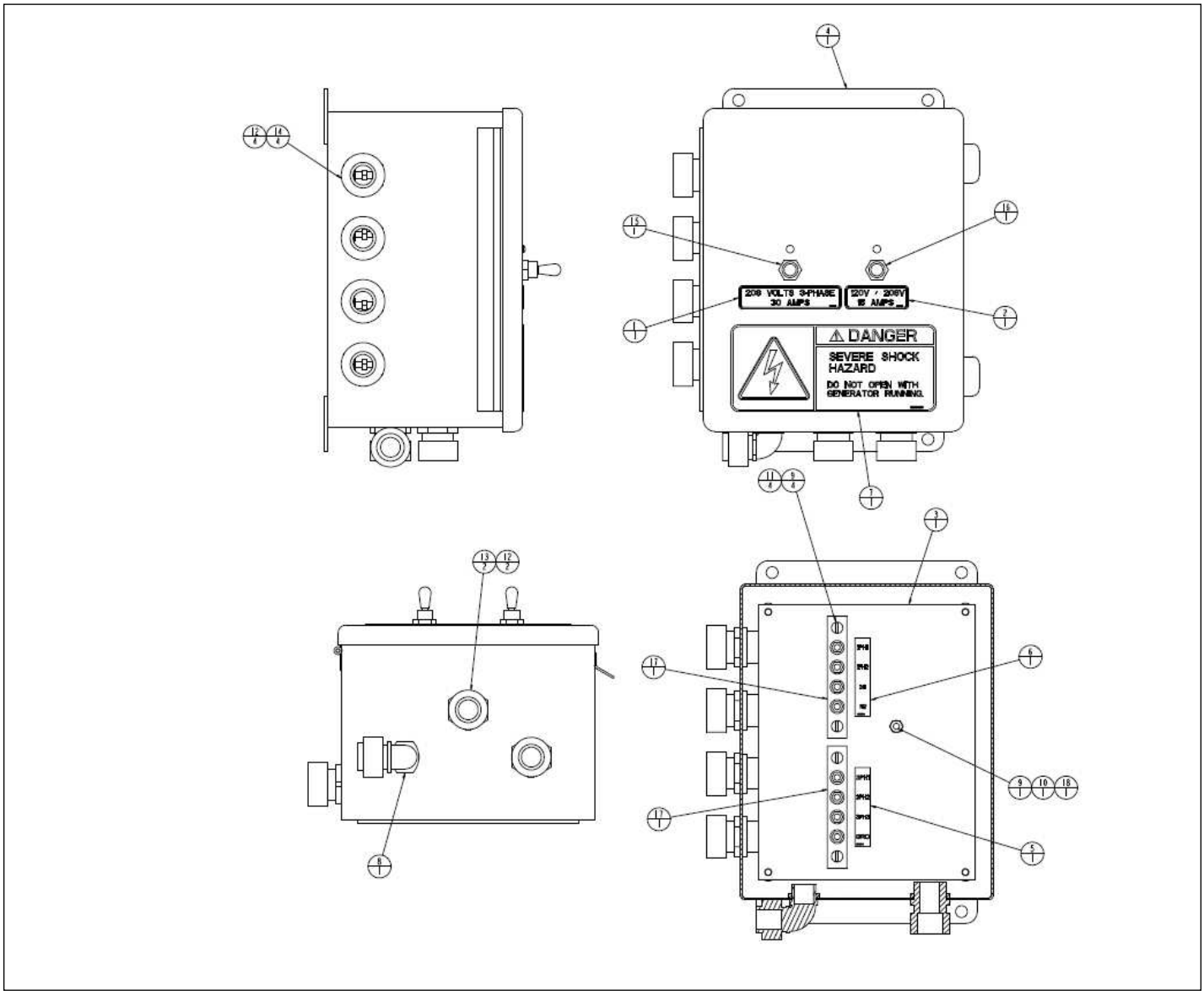

Courtesy of Crane.Market

Item	Part No.	Name	Qty	Uom
1	0083860	DECAL, OUTLET 208V-3 PHASE	1	EA
2	0083861	DECAL, 120V/208V-3 PHASE	1	EA
3	0083968	PANEL, DRILLED	1	EA
4	0083969	WIRING BOX, DRILLED 11KW GEN	1	EA
5	0083972	DECAL, TERM STRIP 11KW GEN	1	EA
6	0083973	DECAL, TERM STRIP 11KW GEN	1	EA
7	0083988	DECAL DANGER SHOCK HAZARD	1	EA
8	962849	CONDUIT FTG1/2 in 90D LIQ TIGHT	1	EA
9	974689	SCR RDH MACH 10-24 .75	4	EA
10	984049	NUT, #10-24 HEX	1	EA
11	987089	#10 LOCK WASHER	4	EA
12	3040110	NUT LKG HUB .750 SAMEAS 962129	6	EA
13	3040116	CONN .75 .500-.625	2	EA
14	3040295	CONN .75 .625-.75	4	EA
15	3040775	CIRCUIT BRKR	1	EA
16	3040776	CIRCUIT BRKR	1	EA
17	3044704	TERM STRIP (4) #10 STUD	2	EA
18	5560034	NUT HEX LKG 10-24	1	EA

Courtesy of Crane.Market

OPTIONS

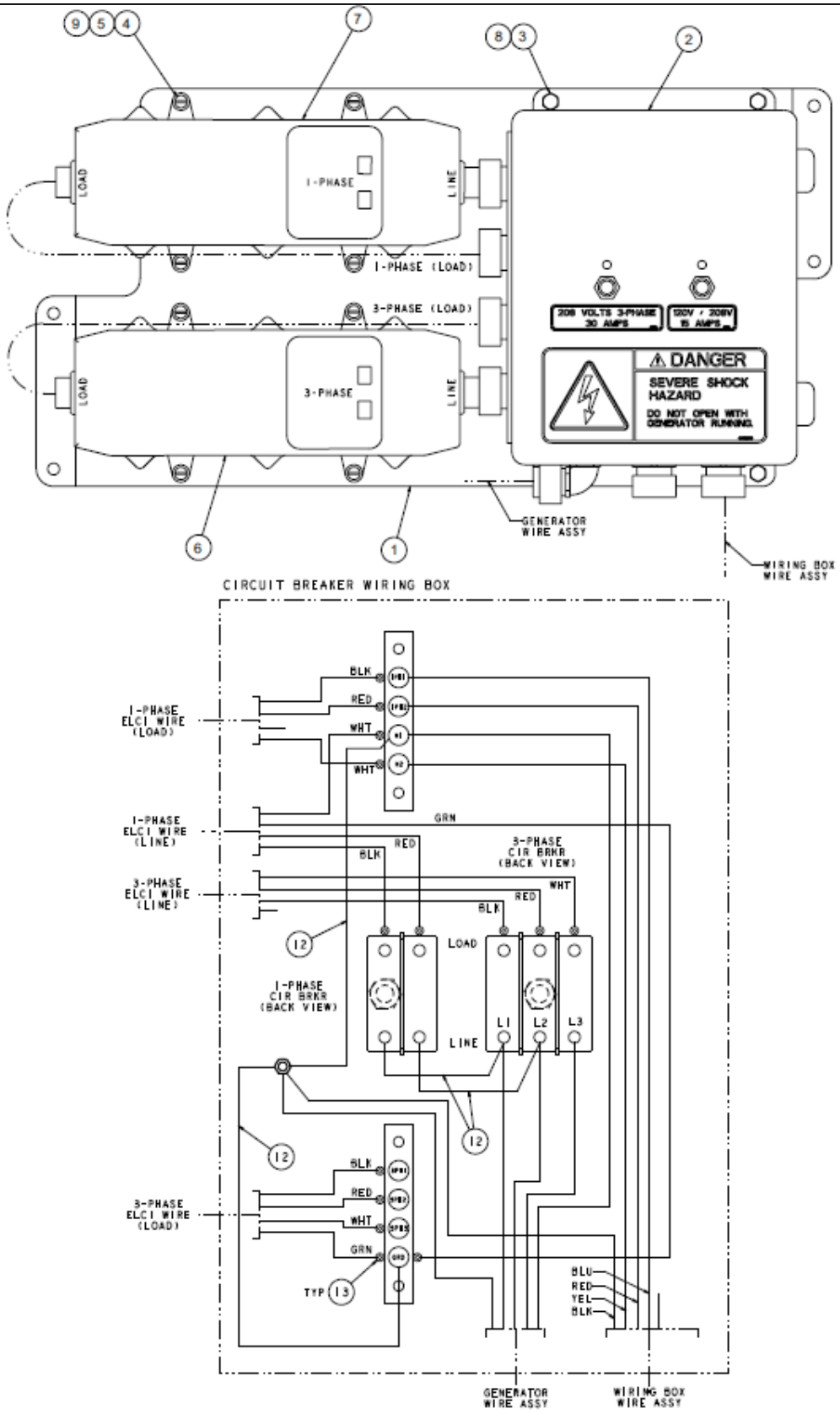

12 kW Generator Circuit Breaker Wiring

Courtesy of Crane.Market

Item	Part No.	Name	Qty	Uom
1	0083965	BRACKET, 11KW CIR BRACKET MOUNTING	1	EA
2	0083967	WIRING BOX ASSEMBLY 11KW GEN	1	EA
3	970029	CAPSCREW 1/4-20 X 3/4 INCH LONG HEX HEAD GRADE 5	4	EA
4	974709	SCREW RHD #10-24 X 1 PLATED	8	EA
5	986009	FLAT WASHER #10	8	EA
6	3040771	ELCI DEVICE 240V/30A 3-PHASE	1	EA
7	3040772	ELCI DEVICE 240V/30A SINGLE PHASE	1	EA
8	5560004	NUT HEXHD .250-20 LKG	4	EA
9	5560034	NUT HEX LKG 10-24	8	EA
12	0070712	WIRE 12 R10I R10I 5	4	EA
13	3044854	REPLACEMENT TERMINAL	14	EA

Courtesy of Crane.Market

OPTIONS

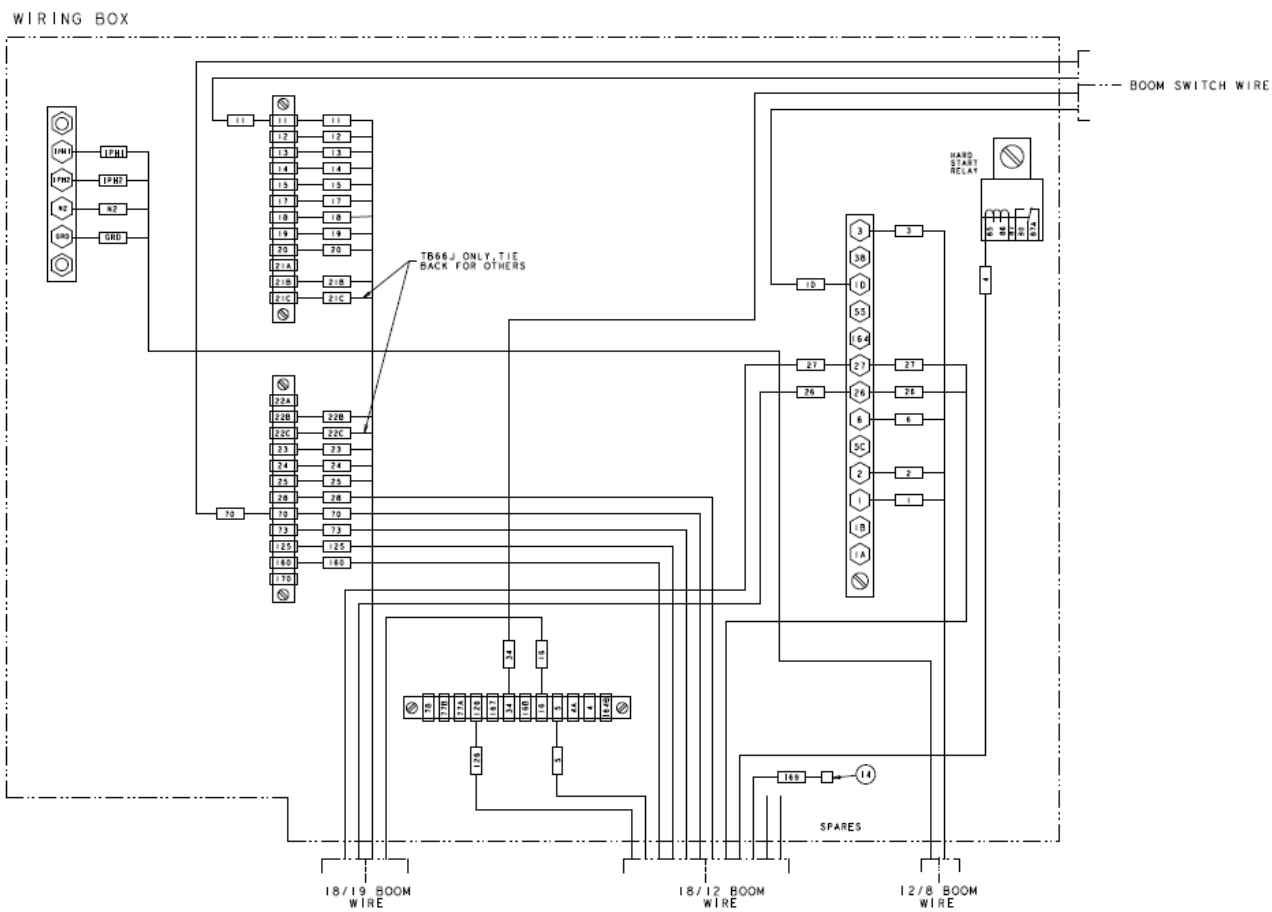

18/19 CONDUCTOR WIRE					
	SHORNEL WIRE NO.	DESCRIPTION	B. RES WIRE NO.	BRAND RES WIRE COLOR	TERMINAL WIRING BOX
	11	RANGE (LOW MOTOR SPD)	12	BLACK/RED	ITEM 4
	12	LEVEL - DOWN	13	BLUE/RED	ITEM 4
	13	LEVEL - UP	14	ORANGE/RED	ITEM 4
	14	BOOM - EXTEND	15	YELLOW/RED	ITEM 4
	15	BOOM - RETRACT	6	BROWN	ITEM 4
	16	HYD. SPEED	3	BLUE	ITEM 4
	17	DRIVE - FORWARD	4	ORANGE	ITEM 4
	18	DRIVE - REVERSE	10	YELLOW/BLACK	ITEM 4
	19	STEER - LEFT	16	BROWN/RED	ITEM 4
	20	STEER - RIGHT	8	BLUE/BLACK	ITEM 4
	21B	MAIN BOOM - DOWN	19	ORANGE/BLUE	ITEM 4
(TB66J ONLY)	21C	JIB - DOWN	18	RED/BLUE	ITEM 4
	22B	MAIN BOOM - UP	7	RED/BLACK	ITEM 4
(TB66J ONLY)	22C	JIB - UP	9	ORANGE/BLACK	ITEM 4
	23	SWING - CCW	17	BLACK/BLUE	ITEM 4
	24	SWING - CW	11	BROWN/BLACK	ITEM 4
	25	THROTTLE - MED.	1	BLACK	ITEM 4
	26	PLATFORM ROT-CW	5	YELLOW	ITEM 1
	27	PLATFORM ROT-CCW	2	RED	ITEM 1

18/12 CONDUCTOR WIRE				
SHORNEL WIRE NO.	DESCRIPTION	B. RES WIRE NO.	BRAND RES WIRE COLOR	TERMINAL WIRING BOX
4	RUN - FROM PLATFORM	1	BLACK	ITEM 14
5	START - FROM PLATFORM	11	BROWN/BLACK	ITEM 4
28	SENSE LINE DUMP	12	BLACK/RED	ITEM 4
70	HI/LO SPEED SIGNAL	2	RED	ITEM 4
73	TILT SIGNAL POWER - RELAY	8	BLUE/BLACK	ITEM 4
125	THROTTLE (HIGH)	7	RED/BLACK	ITEM 4
160	HYD. VALVE SIGNAL	9	ORANGE/BLACK	ITEM 4
126	ENGINE KILL SIGNAL	4	ORANGE	ITEM 4
169	HYD GENERATOR	6	BROWN	ITEM 14
26	PLATFORM ROT-CW	10	YELLOW/BLACK	ITEM 1
---	SPARE	5	YELLOW	---
27	PLATFORM ROT-CCW	3	BLUE	ITEM 1

12/8 CONDUCTOR WIRE				
SHORNEL WIRE NO.	DESCRIPTION	B. SEX WIRE NO.	BRAND SEX WIRE COLOR	TERMINAL WIRING BOX
1	POWER TO PLATFORM	2	RED	ITEM 1
2	POWER TO PLATFORM	7	RED/BLACK	ITEM 1
5	GROUND	1	BLACK	ITEM 1
6	EMER. POWER	4	ORANGE	ITEM 1
1PH1	1-PHASE	5	YELLOW	---
1PH2	1-PHASE	8	BLUE/BLACK	---
N2	NEUTRAL	6	BROWN	---
GRD	GROUND	5	BLUE	ITEM 1

A08125D A

Courtesy of Crane.Market

Item	Part No.	Name	Qty	Uom
1	3044854	REPLACEMENT TERMINAL	12	EA
2	3044146	TERM R10I 22/18	1	EA
3	3044142	TERM R6I 22/18-PN18-6R-M	1	EA
4	3046972	REPLACEMENT TERMINAL	47	EA
5	0084174	ASSY PLATF CONT BOX 12KW TB66J	1	EA
9	5093004	CLAMP	1	EA
10	5560383	BLT HEXHD .250-20 .75 GR8	1	EA
11	986019	WASHER FLAT .250	1	EA
12	987099	WASHER LOCK .250	1	EA
13	0071800	PLATFORM FOOT SWITCH	1	EA
14	3040047	TERM FEM250FI 22/18	1	EA
15	3040046	TERM, .250 MALE SLIP-ON F.I. 22/18 WIRE	2	EA

Courtesy of Crane.Market

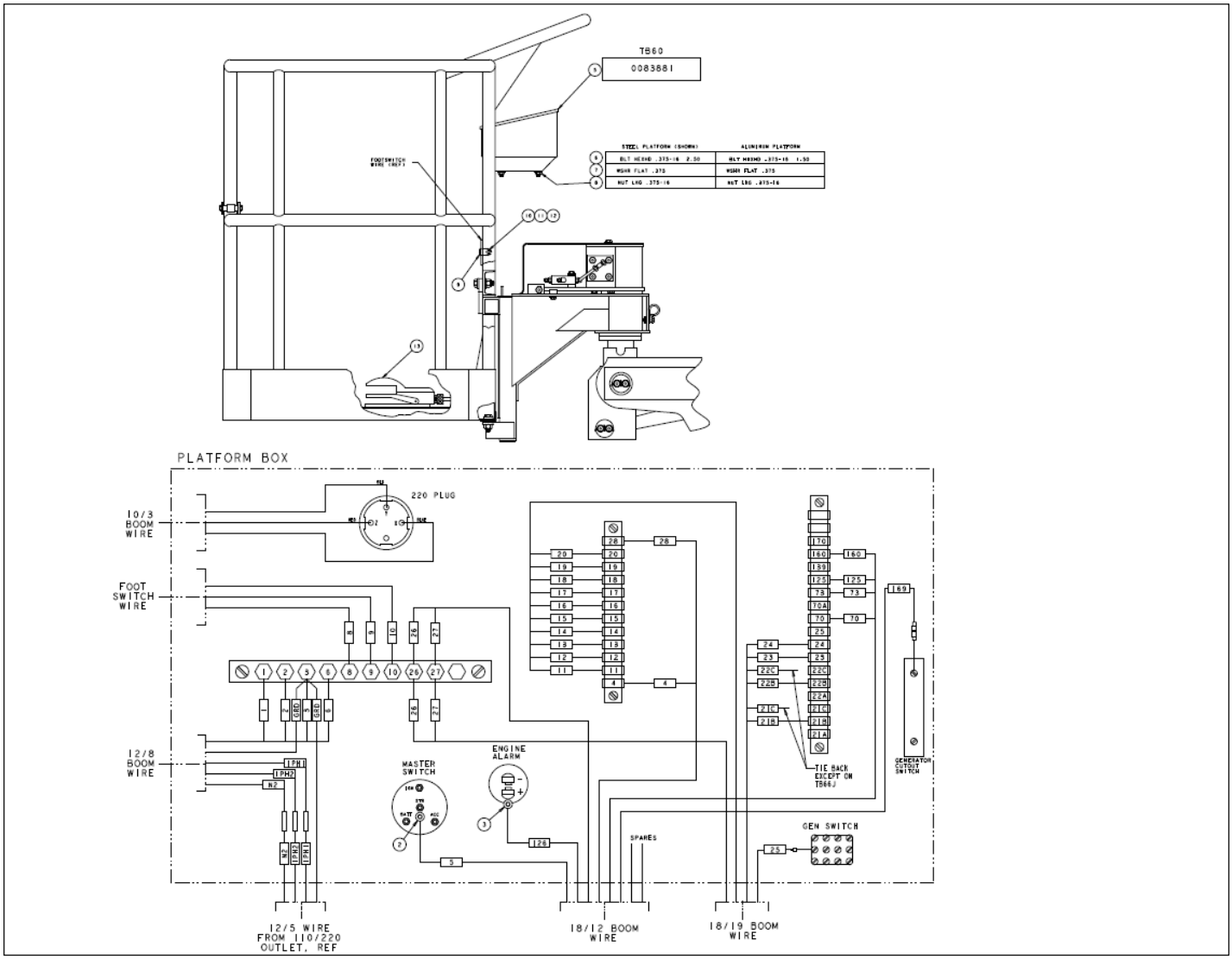

Courtesy of Crane.Market

OPTIONS

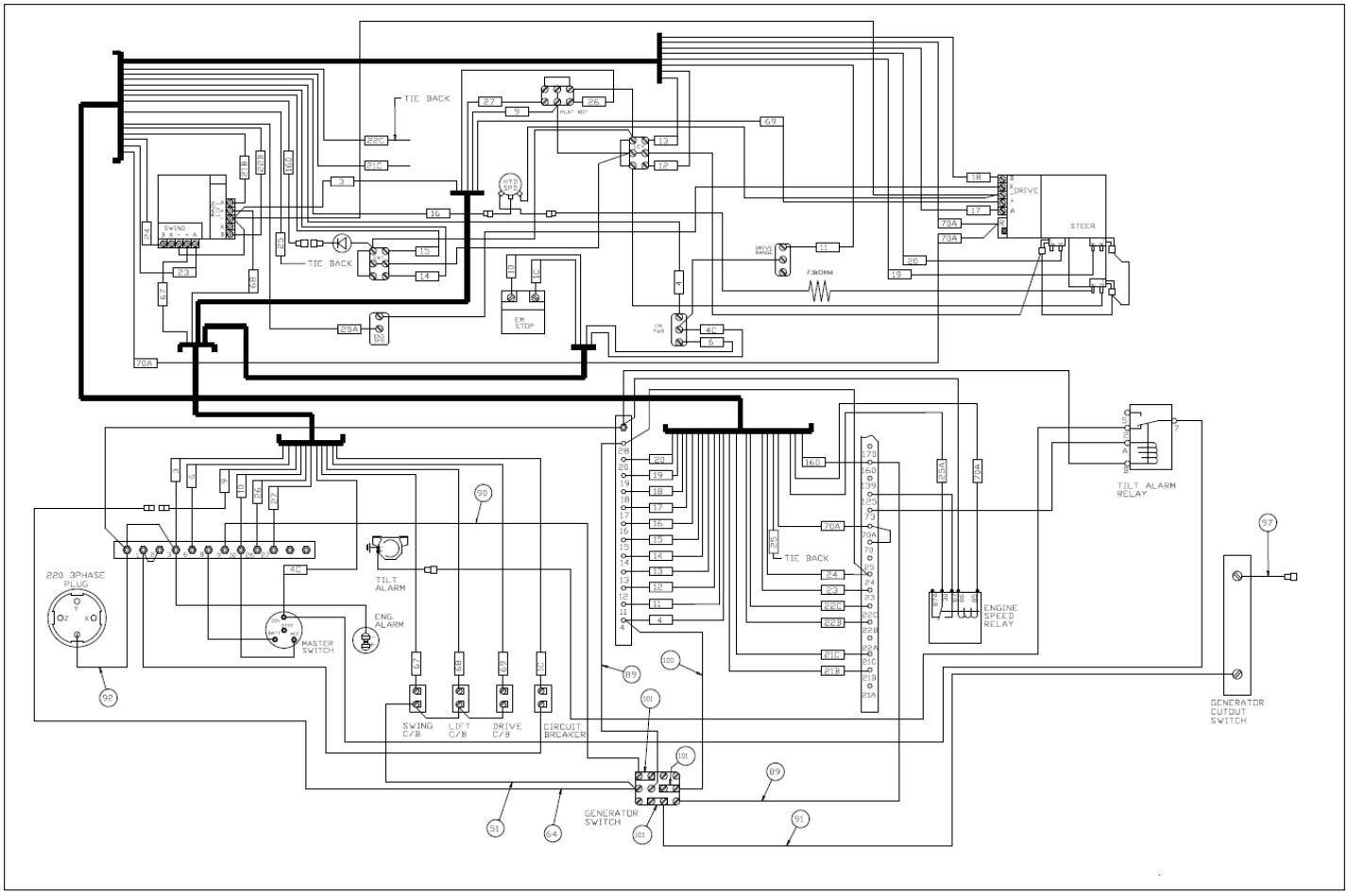

Courtesy of Crane.Market

Item	Part No.	Name	Qty	Uom
11	3020048	SWITCH TOGGLE 4PDT (ON/ON) SELAED	1	EA
21	0151459	PLACARD	1	EA
22	0072530	DECAL DNGR ELEC HAZARD	1	EA
25	475986	REED SWITCH – 2 PCS	1	EA
30	0083956	BRKT LID SWITCH MNTG	1	EA
32	3045254	RECEPTACLE 3 POLE 4 COND 30A	1	EA
34	986159	WSHR FLAT 6	8	EA
35	984009	NUT #6-32 HEX	2	EA
47	0083860	DECAL, OUTLET 208V-3 PHASE	1	EA
50	986009	FLAT WASHER #10	6	EA
51	0070730	WIRE 16 R61 R61 5.5	6	EA
54	984049	NUT, #10-24 HEX	6	EA
59	5563025	TERMINAL STRIP #10 STUD 6 CIR	2	EA
60	5560673	MACHINE SCREW #10-24NC X 1" LG	4	EA
64	0181187	JUMPER WIRE	1	EA
67	5569997	NUT HEX 6-32	2	EA
69	974269	SCR RDH 6-32 1.00	4	EA
89	0071517	WIRE 18 R6I FEM188I 13	2	EA
90	0071541	WIRE 12 R61 R101 14	1	EA
91	0101298	WIRE 18 R6I R6I 23.5	1	EA
92	0072293	WIRE 12 R101 NONE 17	1	EA
94	0083988	DECAL DANGER SHOCK HAZARD	1	EA
97	0090757	WIRE 16 R61 FEM250FI 3	2	EA
100	0151556	WIRE 16 R6 FEM1881 6	1	EA
101	0060373	JUMPER, SWITCH TERMINAL STRAP	3	EA

Courtesy of Crane.Market

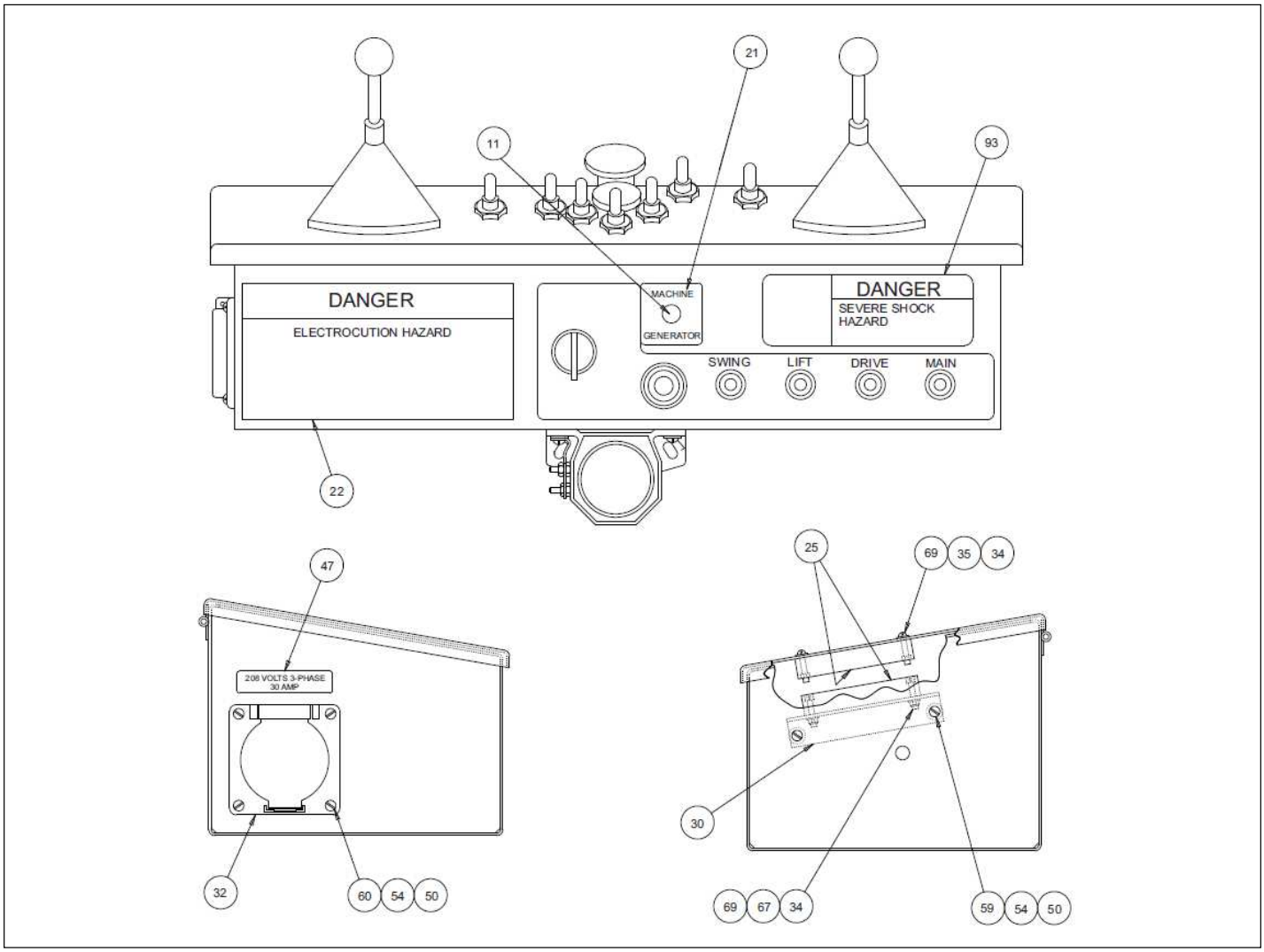

Courtesy of Crane.Market

OPTIONS

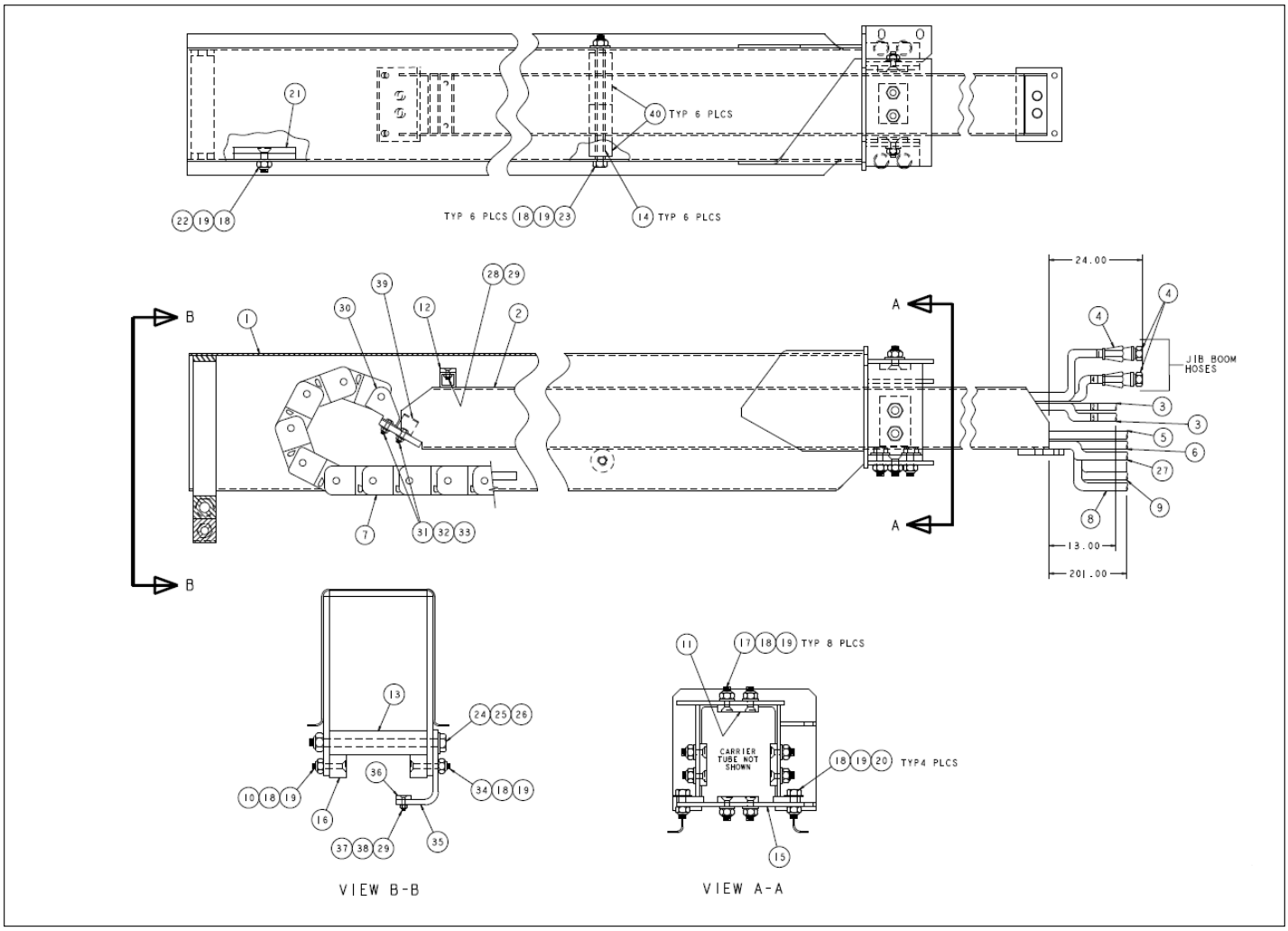

Courtesy of Crane.Market

Item	Part No.	Name	Qty	Uom
1	0083802	WELDMT HOSE CARRIER	1	EA
2	0083794	WELDMT TUBE	1	EA
3	0081089	HOSE -3-4S-4S 739	2	EA
4	0081090	HOSE -3-4S-4S 790	2	EA
5	3010006	POWER WIRE, 12 GAUGE/8 CONDUCTOR X 87 FEET LONG (TERMINALS NOT INCLUDED)	85	EA
6	3010009	CABLE 18GA / 12 COND	85	EA
7	9920017	PLASTITRAK (118 LINKS)	81	EA
8	5010024	HOSE 1/2" ID AIR HOSE PARKER	90	EA
9	3011005	WIRE, 10/3 COND	90	EA
10	5560681	CAPSCREW, 3/8-16 X 2 1/4 LG. FLAT SOC. HD. PLATED	1	EA
11	0100105	SLIDE PAD	4	EA
12	0101379	SL PAD 1.00 4.00 .25 2H	1	EA
13	0110841	SLIDE PAD	1	EA
14	0110227	SPACER	6	EA
15	0083796	ANCHOR PLATE BOTTOM	1	EA
16	0110842	SLIDE PAD	2	EA
17	5560675	CAPSCREW, 3/8-16 X 1 1/4 LG. FLAT SOC. HD. PLATED	8	EA
18	5560033	NUT HEXHD .375-16 LKG	23	EA
19	986039	WSHR FLAT WIDE .375	23	EA
20	970489	CAPSCREW 3/8-16 X 1-1/2 INCH LONG HEX HEAD GRADE 5	4	EA
21	0110603	SLIDE PAD	1	EA
22	972489	3/8-16NC 1 1/2 LARGE FLAT SOCKET HD	2	EA
23	970639	CAPSCREW, 3/8-16 X 8" LG. HEX HD. GR. 5	7	EA
24	5569980	BLT HEXHD .500-13 X 8.50 LG	1	EA
25	986059	WSHR FLAT WIDE .500	2	EA

Courtesy of Crane.Market

Item	Part No.	Name	Qty	Uom
26	5560039	NUT LKG .500-13	1	EA
27	3010005	CONTROL WIRE #2, 18 GAUGE/19 CONDUCTOR X 87 FEET LONG - (TERMINALS NOT INCLUDED)	85	EA
28	5560330	CAPSCREW 1/4-20 X 3/4 INCH LONG SOCKET FLAT HEAD	2	EA
29	5560004	NUT HEXHD .250-20 LKG	2	EA
30	9920018	END BRKT HOSE CARRIER	1	EA
31	970369	CAPSCREW 5/16-18	3	EA
32	5560031	NUT HEX LKG .313-18	3	EA
33	986269	WASHER 5/16 MEDIUM FLAT	3	EA
34	972539	FLSKTHD .375 X 2.75 ZINC PLTD	1	EA
35	0083807	BRKT MNTG	1	EA
36	0060089	SLIDE PAD	1	EA
37	5560331	CAPSCREW 1/4-20 X 1 INCH LONG SOCKET FLAT HEAD	2	EA
38	986019	WASHER FLAT .250	2	EA
39	5093012	CUSHION CLAMP #28 (1-3/4")	1	EA
40	0181270	ROLLER	12	EA

Courtesy of Crane.Market

OPTIONS

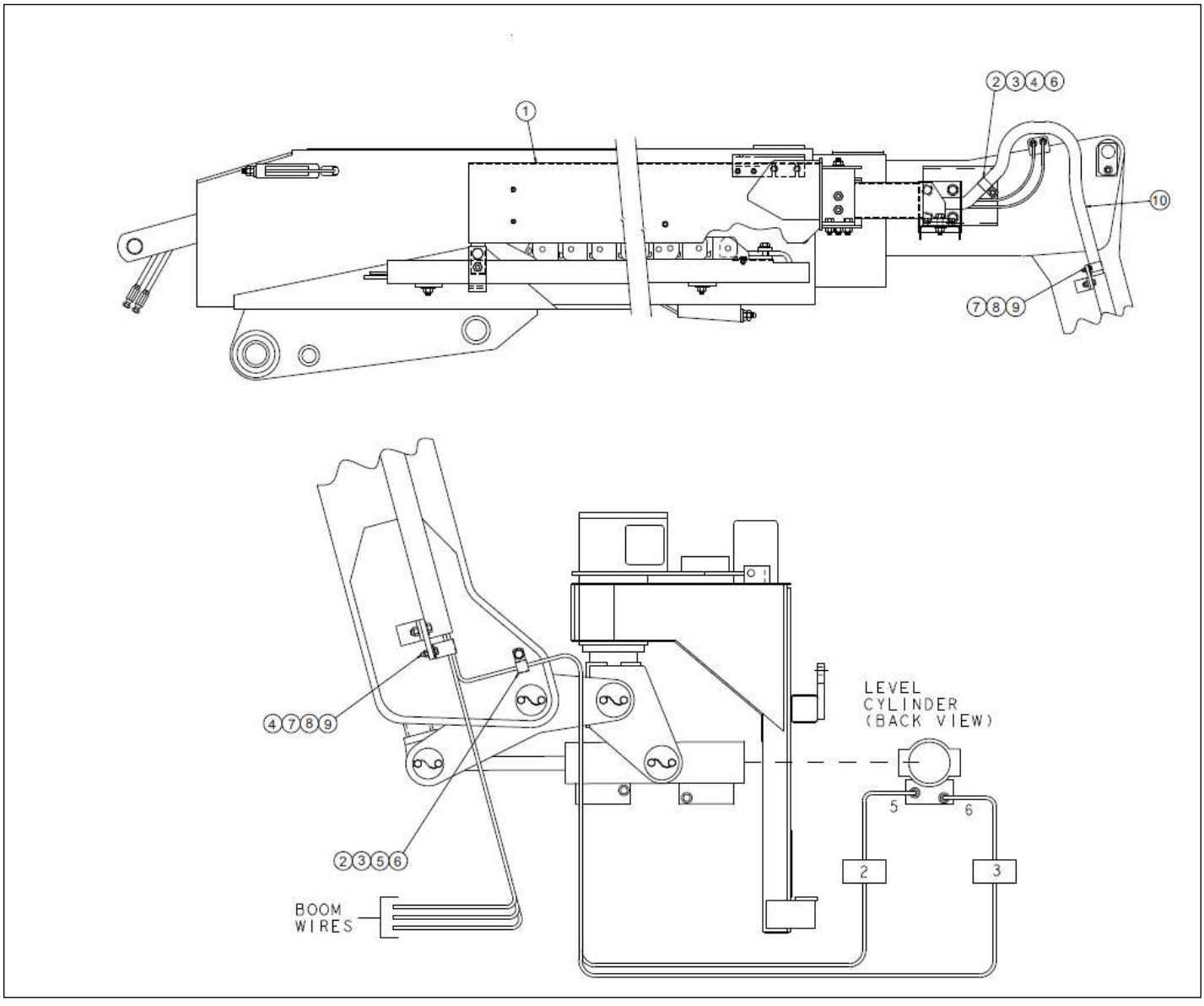

Courtesy of Crane.Market

Item	Part No.	Name	Qty	Uom
1	0084172	ASSY HOSE CARRIER TB66J W/12 KW GEN	1	EA
2	986299	BOLT HEXHD .313-18 2.50 GR. 5	7	EA
3	5560033	NUT HEXHD .375-16 LKG	6	EA
4	5093010	CUSHION CLAMP #24 (1-1/2")	4	EA
5	5093004	CLAMP	1	EA
6	970449	CAPSCREW 3/8-16 X 3/4 INCH LONG HEX HEAD GRADE 5	2	EA
7	986019	WASHER FLAT .250	2	EA
8	970049	BOLT HEXHD .250-20 1.00 GR. 5	2	EA
9	5560004	NUT HEXHD .250-20 LKG	2	EA
10	5090034	HOSE GUARD X 102 INCH LONG	4 FT	EA

Courtesy of Crane.Market

Maintenance

Every person who maintains, inspects, tests or repairs the aerial platform must be qualified to do so. Maintenance functions must be performed by maintenance personnel who are qualified to work on the aerial platform.

⚠Caution

Welding current can be very intense. Damage to electronic components can result. Connect the ground clamp as close as possible to the area being welded. Disconnect the battery cables and any microprocessors and engine control modules before welding on the machine.

If it becomes necessary to weld aerial platform components as a method of repair, take all precautions to prevent damage to electronic circuitry and devices on the machine. This includes, but may not be limited to, disconnecting battery cables and electronic devices.

Do not modify this aerial platform without prior written consent of the Snorkel Engineering Department. Modification may void the warranty, adversely affect stability or affect the operational characteristics of the aerial platform.

Maintenance Schedules

The manufacturer has established a preventative maintenance schedule to detect any defective, damaged or improperly secured parts and provide information regarding lubrication and other minor maintenance items.

This schedule includes the following:

- Daily Prestart Inspection
- Frequent Inspection and Maintenance – Every 90 Days or 150 Hours
- Annual Maintenance – Every 500 Hours

The Daily Prestart Inspection must be performed by a trained operator. All other maintenance and inspection must be performed by a trained service technician only. Retain a copy of these forms for your records.

All placards and decals on the machine must be in place and legible. Use the Placards and Decals parts page in the Repair Parts section of this manual to check these placards and decals.

Snorkel recommends that you make additional copies of the preventative inspection and maintenance checklists for your use in performing these inspections.

⚠Warning

The potential for accident increases when operating an aerial platform that is damaged or malfunctioning. Death or serious injury can result from such accidents. Do not operate the aerial platform if it is damaged or malfunctioning.

Repair all defects before returning the machine to service.

General Information

The parts drawings located in the Repair Parts section are designed for use as a guide for proper disassembly of the machine and components, as well as, for parts replacement.

⚠Danger

Hydraulic fluid escaping under pressure can have enough force to inject fluid into the flesh. Serious infection or reaction will result if medical treatment is not given immediately. In case of injury by escaping hydraulic fluid, seek medical attention at once.

Always refer to the hydraulic system installation drawings and the electrical wiring diagram before removing or disassembling associated parts.

When disassembling or reassembling components, complete the procedural step in sequence. Do not partially disassemble or assemble one part, then start on another. Always check your work to assure that nothing has been overlooked.

Keep the following in mind when disassembling or assembling the machine.

- Always be conscious of weight.
- Never attempt to lift heavy objects without the aid of a mechanical device.
- Do not allow heavy object to rest in an unstable condition.
- Always make sure the work platform is in the stowed position, blocked or the weight removed by a suitable lifting device before removing any components from the machine.
- When raising a portion of the machine, be sure that adequate blocking is properly positioned. Do not depend solely on the lifting device to hold and secure weight.
- If a part resists removal, check to see if all fasteners, electrical wiring, hydraulic lines, etc., have been removed or that other parts are not interfering.

Parts should be thoroughly inspected before restoring to service at the time of reassembly. Burrs, nicks or scratches may be removed from machines surfaces by honing or polishing with a #600 crocus cloth,

Courtesy of Crane.Market

followed by a thorough cleaning with an approved cleaning solvent, and blown dry with compressed air. Do not alter the contour of any part. If this operation does not restore the part to a serviceable condition, replace the part.

Replace all o-rings, seals and gaskets at reassembly. Use new roll pins or cotter pins. Dip all packing rings and seals in hydraulic oil before reassembling in cylinder and manifolds. Replace any part having imperfect threads. In general, machines that have been disassembled can be reassembled by reversing the order of disassembly.

The service life of a machine can be increased by keeping dirt and foreign materials out of the vital components. Shields, covers, seals and filters help to keep air and oil supplies clean. However, these items must be maintained on a scheduled basis in order to function properly.

Clean surrounding areas, as well as the opening and fittings before disconnecting air or oil lines. As soon as a line or component is disconnected, cap or cover all openings to prevent the entry of dirt or foreign materials.

New parts should remain in their container until they are ready to be used.

Clearly mark or tag hydraulic lines and electrical wiring connections when disconnecting or removing them from the machine. This will assure that they are correctly reinstalled.

Proper assembly is critical to the successful rebuilding of any machine. Carefully, inspect any parts which are to be reused. If in doubt, replace.

“Safety First” is a good slogan.

Replace any guards and protective devices that have been removed to carry out maintenance and repair work.

Courtesy of Crane.Market

Daily Prestart Inspection

Item	Inspect For	Ok
Operator's Manual	In manual holder	
Engine		
Oil level	Between full and add marks	
Coolant	Liquid cooled engines-proper fluid level	
Radiator	Cap tight, good condition and clean	
Air cooled engines	Air intake and fan free of obstructions Belt in good condition	
Fuel tank and line	Tank full, cap in place and tight/no leaks	
Air filter	Indicator in proper position	
Charging system	Proper operation	
Cold weather start kit	No damage or deformation	
Electrical System		
Emergency power battery	Condition and charged for proper operation	
Battery fluid level and terminals	Proper level/clean, connectors tight	
Cables and wiring harness	No wear or physical damage	
Hydraulic System		
Fluid level	Between full and add marks	
Fluid filter	Verify operation in the green zone	
Hoses, tubes, and fittings	No leaks	
Cold weather warm-up kit	Proper operation	
Tires		
Air filled	Good condition, proper inflation	
Foam filled	Good condition	
Wheels	All wheel lug nuts present and tight	
Lower Control Station		
Operating controls	Proper operation	
Emergency stop	Shuts off lower controls	
Emergency power	Proper operation	
Emergency Lowering	Proper operation	
Level Sensor	Sounds tilt alarm	
Flashing Light	Proper operation	
Sandblast Protection Kit	In place and proper operation	
Structures		
Weldments – Chassis, turntable, booms, platform, etc.	Welds intact, no damage or deformation	
Slide pads	In place, no damage or deformation	
Fasteners	In place and tight	
Whiffles and wire ropes	No deformation or broken strands/even tension	
Upper Control Station		
Guardrail system and lanyard anchors	Welds intact, no damage or deformation	
	All fasteners in place, no loose or missing parts	
Operating controls	Proper operation	
Emergency stop and power system	Shuts off upper controls/proper operation	
Horn	Sounds when activated	
Electrical power outlet	Proper operation of outlet and GFCI	
Drive motion alarm	Sounds when aerial platform moves	
Driving and work lights	Proper operation	
Platform control cover	In place and proper operation	
Air line	Good condition, proper operation	
Tow Kit	In place, no damage or deformation	
Placards and Decals	In place and readable	

Performed by: _____ Date: _____

Courtesy of Crane.Market

Courtesy of Crane.Market

Frequent Inspection and Maintenance – Every 90 Days or 150 Hours

Item	Procedure	Information	Ok
Chassis			
Structural	Check for damage and cracked welds		
Steering cylinder pin caps and tie wire	Verify that all fasteners are in place and are tight		
Steering linkage	Check for proper operation		
Tires	Check for wear and damage		
	Proper inflation	65 psi to 70 psi – Air filled tires only	
Hydraulic tubes and hoses	Check for leaks, wear, and damage		
Drive motor brake	Check for proper operation		
Torque drive and steer wheel lug nuts per placard on wheel	Torque lug bolts/nuts to proper value on machine placard	Front 4x4: 200 to 225 ft lb Front 4x2: 400 to 450 ft lb Rear: 200 to 225 ft lb	
Right drive motor	Check for leaks		
Left drive motor	Check for leaks		
Tie-down and lifting lugs	Check for damage and cracked welds		
Decals and placards	Check for damage and readability Order replacements as necessary		
Turntable			
Structural	Check for damage and cracked welds		
Torque turntable top bolts	Torque to proper value	180 to 200 ft lbs	
Torque turntable bottom bolts	Torque to proper value	180 to 200 ft lbs	
Hydraulic tubes and hoses	Check for leaks, wear, and damage		
Centerpost	Check for leaks, wear, and damage		
Centerpost mounting bolts	Verify that all fasteners are in place and are tight		
Lift cylinder pin caps and tie wire	Verify that all fasteners are in place and are tight		
Lift cylinder and holding valve	Check for leaks, wear, damage, and for proper operation		
Master level cylinder pin caps and tie wire	Verify that all fasteners are in place and are tight		
Master level cylinder and holding valves	Check for leaks, wear, damage, and for proper operation		
Emergency bleed down valve	Check for proper operation		
Cowling	Check for wear/damage and that fasteners are in place and are tight		
Wire harness	Check for wear/damage and that fasteners are in place and are tight		
Rotation brake	Check for proper operation		
Rotation backlash	Check for wear and damage		
Operator's Manual	Proper manual in document holder		
System pressure	Check maximum system pressure	2,500 psi	
Decals and placards	Check for damage and readability Order replacements as necessary		

Courtesy of Crane.Market

Frequent Inspection and Maintenance – Every 90 Days or 150 Hours

Item	Procedure	Information	Ok
Lower Controls			
Control switch in the lower controls position	Check for proper operation	With the selector in the lower controls position, the upper controls do not work	
Station selector switch in the upper controls position	Check for proper operation	With the selector in the upper controls position, the lower controls do not work	
Engine Start – Stop	Check for proper operation		
Throttle High – Low	Check for proper operation		
Turntable CW – CCW	Check for proper operation		
Boom elevation Up – Down	Check for proper operation		
Boom Extend – Retract	Check for proper operation		
Jib Up – Down	Check for proper operation		
Platform level Up – Down	Check for proper operation		
Platform rotation CW – CCW	Check for proper operation		
Emergency power, all functions	Check for proper operation		
Emergency stop	Check for proper operation		
Booms			
Structural	Check for damage and cracked welds		
Lift cylinder pin caps and tie wire	Verify that all fasteners are in place and are tight		
Hydraulic tubes and hoses	Check for leaks, wear, and damage		
Extension cylinder pin caps and tie wire	Verify that all fasteners are in place and are tight		
Extension cylinder and holding valve	Check for leaks, wear, damage, and for proper operation		
Jib boom pin caps and tie wire	Verify that all fasteners are in place and properly installed		
Jib cylinder pin caps and tie wire	Verify that all fasteners are in place and properly installed		
Jib cylinder and holding valve	Check for leaks, wear, damage, and for proper operation		
Hose carrier tube and support	Check for residue buildup/proper operation		
Plastic hose track	Check for wear and damage		
Electrical wires	Check for wear and damage		
Extend/retract wire ropes and sheaves	Check for wear/damage and that fasteners are in place and are tight		
Whiffles	Check for wear/damage and that fasteners are in place and are tight		
Decals and placards	Check for damage and readability Order replacements as necessary		

Courtesy of Crane.Market

Frequent Inspection and Maintenance – Every 90 Days or 150 Hours

Item	Procedure	Information	Ok
Platform			
Structural	Check for damage and cracked welds		
Entry Gate	Check for proper operation		
Hydraulic tubes and hoses	Check for leaks, wear, and damage		
Slave level cylinder pin caps and tie wire	Verify that all fasteners are in place and are tight		
Slave level cylinder holding valves	Check for leaks, wear, damage, and for proper operation		
Decals and placards	Check for damage and readability Order replacements as necessary		
Upper Control Station			
Foot switch	Check for proper operation	With the foot switch engaged the engine should not start. Functions should be operational when foot switch is engaged	
Engine Start – Stop	Check for proper operation		
Throttle High – Low	Check for proper operation		
Turntable CW – CCW	Check for proper operation		
Boom elevation Up – Down	Check for proper operation		
Boom Extend – Retract	Check for proper operation		
Jib Up – Down	Check for proper operation		
Platform level Up – Down	Check for proper operation		
Platform rotation CW – CCW	Check for proper operation		
Drive speed	Boom up and/or extended 4x2 Low – 1.0 mph 4x4 Low – 0.7 mph	 1 mph = 100 ft in 65 to 75 sec 0.7 mph = 100 ft in 90 to 120 sec	
	Boom down and retracted High – 3.0 mph	 3 mph = 100 ft in 22 to 28 sec	
Drive range – boom stowed	Check for proper operation	Slow speed only with boom raised	
Engine choke – gas engine only	Check for proper operation		
Emergency power, all functions	Check for proper operation		
Emergency stop	Check for proper operation		
Gradual start to stop lift/swing/drive controls	Check for proper operation		
Speed limit switch	Check for proper operation		
5° tilt alarm	Check for proper operation		
110 volt AC power to platform	Check for proper operation		
Hydraulic Oil Reservoir			
Filler/breather cap and tank	Check for wear/securely fasten		
Hydraulic fluid level	Check for proper level	Above 10°F (-13°C) Mobil DTE-13M, ISO VG32 Below 10°F (-13°C) Mobil DTE-11M, ISO VG15	
Hydraulic filter	Replace after the first 50 hours, every 90 days or 150 hours thereafter		
	Inspect filter for foreign matter that could indicate component wear		

Courtesy of Crane.Market

Frequent Inspection and Maintenance – Every 90 Days or 150 Hours

Item	Procedure	Information	Ok
Engine			
Charging system	Check for proper operation		
Air filter	Check for wear and damage		
Hour meter	Check for proper operation		
Belts and hoses	Check for wear and damage		
Hydraulic pump	Check for proper operation		
Battery terminals	Clean terminals and check cable condition		
Battery electrolyte	Check electrolyte levels	Add distilled water if necessary	
Indicator gauges	Check for wear/damage and proper operation		
Engine oil	Check for wear and damage/level	Between add and full	
Engine coolant	Check level	Between add and full	
Engine Start – Stop	Check for proper operation		
Electric throttle	Check for proper operation		
Electric choke, if equipped	Check for proper operation		
Engine governor setting	Check for proper operation		
Platform Rotator			
Structural	Check for damage and cracked welds		
Hydraulic rotator actuator	Check for leaks, wear, and damage		
Platform rotation holding valve	Check for proper operation		
Mounting bolts and pin caps	Verify that all fasteners are in place and are tight		
Options			
110 volt AC generator	Check for proper operation		
Dual fuel system	Check condition and for proper operation		
LP gas system and control	Check condition and for proper operation		
Horn	Check for proper operation		
Motion warning alarm	Check for proper operation		
Operation warning light	Check for proper operation		
Key type master switch	Check for proper operation		
Cold weather start kit	Check for proper operation		
Hydraulic system cold weather warm up kit	Check for proper operation		
Extension cylinder bleed down	Check for proper operation		
Driving lights	Check for proper operation		
Platform work lights	Check for proper operation		
Sandblast protection kit	Check for proper operation		
Airline to platform	Check for proper operation		
Tow package	Check for wear and damage/proper operation		
Optional platform	Verify that all fasteners are in place and are tight		
Four wheel drive	Check for proper operation		
Foam filled tires	Check for wear and damage		

Courtesy of Crane.Market

Frequent Maintenance – Every 90 Days or 150 Hours

Item	Procedure	Information	Ok
Daily maintenance	Perform maintenance as per schedule	Retain copy of checklist	
Preventive inspection maintenance checklist	Perform inspection, complete form	Retain copy of checklist	
Placards and decals inspection	Inspect using drawing and parts listing in Section 1 – Repair Parts Manual	Replace any missing or unreadable decals/placards	
Door hinges and latches	Lubricate	SAE 10W oil or spray lubricant	
Rotation bearing	Lubricate	Conoco Super Sta #2 Above 32° F Mobilgrease CM-P Below 32° F Mobilgrease CM-L	
Rotation bearing teeth & pinion	Lubricate	Mobil Mobiltac 375NC	
Tie rods	Lubricate	Conoco Super Sta #2 Above 32° F Mobilgrease CM-P Below 32° F Mobilgrease CM-L	
Gear hubs	Check fluid level, fill if low	Mobil Mobilube HD 80W-90	
Swing drive	Check fluid level, fill if low	Mobil Mobilube HD 80W-90	
Platform rotator	Check for proper operation	Repair or replace if not working properly	
Platform controller	Check smooth operation/speeds		
Batteries	Check specific gravity	1.260/1.275 at 80° F	
Hydraulic return filter	Check condition	Replace if dirty	
Engine RPM	Check for proper engine RPM	See engine owner's manual	
Engine oil and filter	Replace per engine owner’s manual	See engine owner's manual	
Engine fuel filter	Check condition	Replace every 6 months or if dirty	

Performed by:_____ Date:_____

Courtesy of Crane.Market

Annual Maintenance – Every 500 Hours

Item	Procedure	Information	Ok
90 day or 150 hour maintenance	Perform maintenance per schedule	Retain copy of checklist	
Hydraulic oil reservoir	Clean and replace fluid	Above 10° F (-13° C) Mobil DTE-13M, ISO VG32 Below 10° F (-13° C) Mobil DTE-11M, ISO VG15	
Hydraulic return filter	Replace	After first 50 hours, then at recommended interval	
Hydraulic reservoir suction filter	Clean and reinstall		
Hydraulic pressures	Pump setting	Standby pressure: 375-400 psi	
	Function pressures	Boom up: 2,400-2,500 psi	
		Boom down: 600-2700 psi	
		Steer: 1,900-2,000 psi	
		Level: 1,900-2,000 psi	
		Extend: 1,100-1,200 psi	
		Retract: 2,400-2,500 psi	
		Jib up: 1,900-2,000 psi	
		Jib down: 1,300-1,400 psi	
		Drive: 2,800-2,850 psi	
Gear hubs	Replace fluid	Mobil Mobilube HD 80W-90	
Swing drive	Replace fluid	Mobil Mobilube HD 80W-90	
Engine coolant	Check condition	See engine owner's manual	
Front wheel bearings	Clean and repack	Conoco Super Sta #2 Above 32° F Mobilgrease CM-P Below 32° F Mobilgrease CM-L	

Performed by:_____ Date:_____

Courtesy of Crane.Market

Major Repairs

Date	Part Number	Part Description	Repair Performed

Courtesy of Crane.Market

Courtesy of Crane.Market

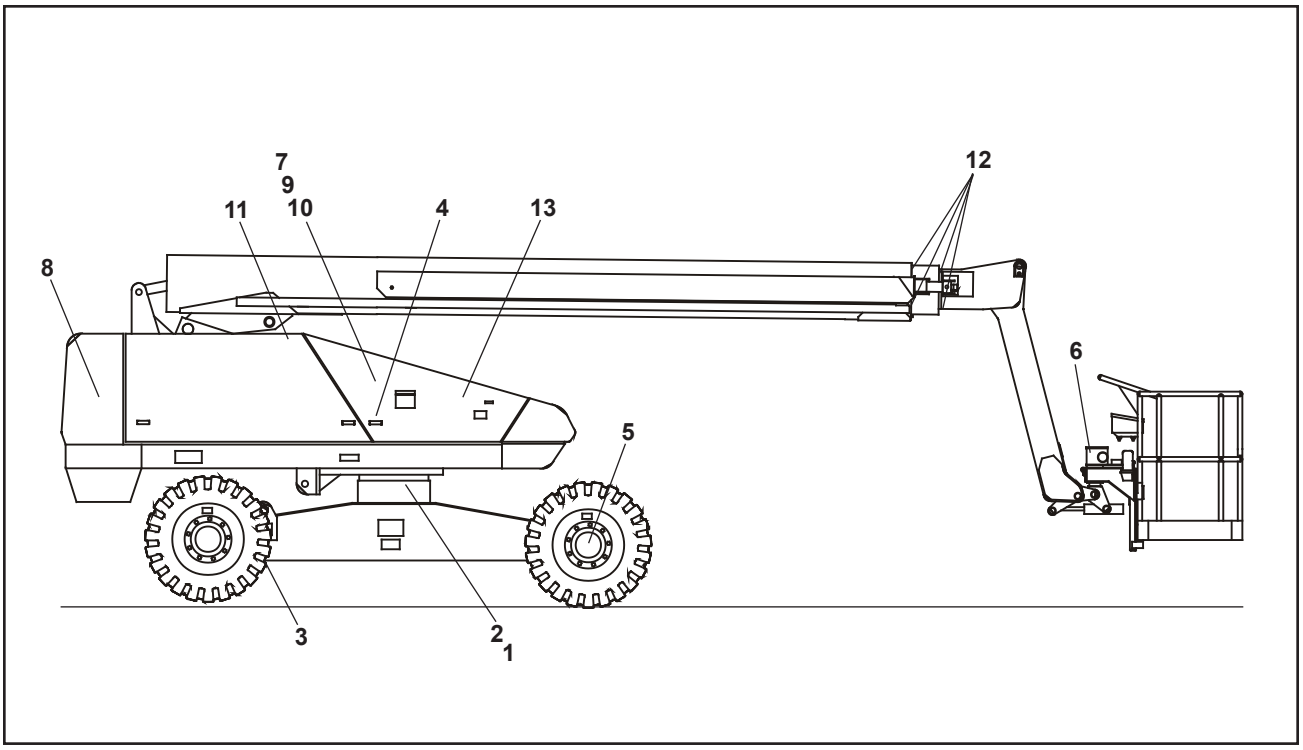

Lubrication Points

Lubrication
Specific lubricants as recommended by Snorkel, should be used in maintaining the unit. If in doubt regarding the use of lubricants other than those listed, contact Snorkel Customer Service Department for evaluation and recommendation.

Refer to the above lubrication illustration to locate component item numbers.

Service all fittings as indicated on the Frequent Maintenance schedule and lubrication illustration. Wipe away all excess lubricant from exposed surfaces. Over lubrication can collect dirt and foreign matter which acts as an abrasive. Lubrication of accessory equipment should be in accordance with the manufacturer's recommendations.

Rotation Bearing
Rotation bearing – Item 1. Pressure gun lubricate bearing at recommended interval using lubricant as outlined in the maintenance schedule. Rotate while lubricating. The lubrication fitting is located on the rear of the turntable.

Rotation Gear Teeth and Pinion
Rotation gear teeth and pinion – Item 2. Gear teeth and gear box pinion should be lubricated with a spray-on type open gear lubricant.

Tie Rods
Tie rods – Item 3. Lubricate at recommended interval using lubricant as outlined in the maintenance schedule.

Swing Drive
Swing drive – Item 4. To check oil level, remove check plug located on the side of the gear box. Unit is full if oil is level with bottom of fill hole or just starts to run out.

Gear Hubs
Gear hubs – Item 5. To check and fill Gear hubs:

1. Rotate wheel until bottom of filler/drain plug is about 1 inch above horizontal centerline.

2. Remove plug with drive ratchet and extension.

3. Fill until lubricant is level with bottom of fill hole.

Note
Do not overfill gear hubs as they are not vented and need air space for expansion of oil to prevent damage to hubs.

Platform Rotator
Platform Rotator – Item 6. Platform rotators will require lubrication only if disassembled for repairs. Consult factory for proper lubricant if replacement of platform rotator is required.

Hydraulic Oil Reservoir
Hydraulic oil reservoir – Item 7. The fluid level should be visible in the bottom of the sight gauge and should be checked with the machine in the stowed position.

The interior of the reservoir should be wiped out and cleaned each time the hydraulic oil is changed. The reservoir filler/breather cap should be removed and the cap strainer cleaned with Kerosene, fuel oil, or other solvent at this time.

Courtesy of Crane.Market

It is absolutely necessary that only new, clean hydraulic oil is added.

Note
If it becomes necessary to add or use an oil other than the recommended fluid, it is important that it be compatible and equivalent to the factory fill. Local oil suppliers can generally furnish this information.

If questions still remain, contact Snorkel Customer Service Department for further information.

Engine
Engine – Item 8. Refer to the engine manufacturer's instruction manual or consult your local engine service representative if engine adjustments or repairs are needed. The engine must be operated in accordance with manufacturer's instructions and serviced at recommended intervals.

Hydraulic Oil Return Filter
Return filter – Item 9. The hydraulic oil return filter is located on the control valve behind the door on the right side of the turntable

The filter element is a throw-away type filter and should be changed after the initial break-in period (approximately 50 hours operation time).

The filter is equipped with a hydraulic pressure gauge to indicate the filter element condition. A by-pass relief within the filter base is provided and is set to by-pass at 25 psi. If pressure readings are above 25 psi, the filter should be changed.

The filter condition should be checked at the 90 day or 150 hour Preventive Inspection Maintenance interval or more frequently under extreme working conditions.

The filter condition indicator is accurate only when the engine is running at maximum rpm and pump is discharging maximum flow, which occurs only during full speed driving. This requires that the indicator be observed while the unit is in motion, booms fully retracted and in stowed position, drive range switch in "LO" position, and drive controller fully forward. Oil temperature should be at least 90° F (32° C).

⚠Warning

Use extreme caution while observing the condition indicator because of the motion of the drive wheels. The condition indicator is best observed from outside of the tract of the vehicle wheels to avoid possible personal injury or machine damage.

When changing the filter element, the oil inside of the filter element, should be examined for deposits of metal cuttings, which is present, could indicate excessive wear in some of the system components.

Suction Strainer
Suction strainer – Item 10. Two 100 mesh strainers are located within the hydraulic oil reservoir, one on the inlet and one on the outlet, and filters the pump suction flow.

The strainers should be cleaned at the time interval shown in the maintenance schedule chart, using Kerosene, fuel oil or other solvent and a soft bristled brush.

Inspect the filter wire cloth for damage. Holes in the filter cloth leak dirt into the pump and other vital hydraulic components. If element is damaged, replace.

When the filter has been thoroughly cleaned, reinstall in suction line and tighten securely.

Door Hinges and Latches
Door hinges and latches – Item 11. After lubricating, remove any excess lubricant or over spray so it will not collect dirt or debris.

Slide Pads
Slide pads – Item 12. Check slide pads for excessive wear and replace as required. Slide pads do not require lubrication.

Battery
Battery – Item 13. The battery will have longer life if the water level is maintained and they are kept charged. The engine will have better starting characteristics with a fully charged battery. In cold weather the battery should be maintained at full charge to keep from freezing. An extremely low or dead battery can freeze in cold weather. Make sure connections are clean and tight.

Make sure charging equipment is operating properly.

⚠Danger

Lead-acid batteries produce flammable and explosive gases. Never allow smoking, flames or sparks around batteries. Lead-acid batteries contain sulfuric acid which will damage eyes or skin on contact. When working around batteries, always wear a face shield to avoid acid in eyes.

If acid contacts eyes, flush immediately with clear water and get medical attention. Wear rubber gloves and protective clothing to keep acid off skin, if acid contacts skin, wash off immediately with clear water.

Battery Care and Maintenance
The following information about battery care and maintenance was supplied by Interstate Batteries and is reprinted here with their permission.

1. New batteries need to be cycled several times before reaching full capacity (20-50 cycles, depending on type). Usage should be limited during this period.

Courtesy of Crane.Market

2. Always recharge batteries fully, immediately after use. Batteries perform best when they are fully charged. More capacity and longer life will result from this practice.

3. The deeper the discharge, the fewer number of cycles a lead-acid battery will deliver. Deep discharges deteriorate the battery quicker than lighter shallow cycles.

4. Battery cables should be intact and connectors kept tight at all times. Systematic inspection is recommended.

5. Vent caps should be kept in place and tight during vehicle operation and battery charging.

6. Batteries should be kept clean – free of dirt and corrosion – at all times. Always keep the top of batteries clean. A film on top of the battery can cause the current to migrate between the posts, accelerating self discharge.

7. Never let the electrolyte level of a lead-acid battery fall below the plates. Lack of maintaining the electrolyte in a lead-acid battery causes damage to the exposed portion of the plate which reduces capacity.

8. Always check electrolyte level before charging. Do not add water to individual cells unless plates are exposed. Batteries should be watered after charging unless the plates are exposed before charging. If exposed before charging, the plates should be covered by approximately 1/8″ of water. Check water level after charging. Water should be kept 1/4″ below the bottom of the fill tube in the cell cover.

9. Water used to replenish batteries should be distilled or treated to not exceed 200 T.D.S. (total dissolved solids... parts per million). Particular care should be taken to avoid metallic solids (iron).

10. A fully charged battery will give you the best and longest service. Be sure the batteries are fully charged before testing or using. A fully charged battery, without a drain or load, after the surface charge has dissipated, is 6.35 volts for a 6 volt battery.

11. Batteries should not be discharged below 20% of capacity (approximately 1.8 volts per cell under normal operating load; 1.98 volts open circuit; 1.145 specific gravity). Proper battery sizing will help avoid excessive discharge.

12. Battery chargers should be sized to fully charge batteries in an eight hour period. Chargers should be kept in proper operating condition.

13. Do not use a mismatched charger of any type; i.e., a 12 volt charger on a 24 volt pack or a 24 volt charger on a 12 volt pack. An undersized charger will never get the job done, no matter how long it tries. An oversized charger will cause excess gassing and heat that could possibly result in a battery meltdown and/or explosion.

14. Never charge a lead-acid battery with a sealed (gel cell) battery charger. The lead-acid battery needs higher voltage to finish its charge. Without it the battery will never come back to 100% and sulfation can occur.

15. Always allow batteries to cool off after charging. The cooling time is very important because heat is generated during the recharge and discharge cycles. Without the cooling time the heat grows, accelerating grid corrosion which is one of the major causes of battery failure. Charging practice should enable batteries to cool before use.

16. Deep cycle batteries need to be equalized periodically. Equalizing is an extended, low current charge performed after the normal charge cycle. It helps keep cells in balance. Actively used batteries should be equalized once per week. Manually timed chargers should have the charge time extended approximately 3 hours. Automatically controlled chargers should be unplugged and reconnected after completing a charge cycle.

17. In situations where multiple batteries are connected in series, parallel or series-parallel, a replacement battery's should be of the same size, age and usage level as the companion batteries. Do not put a new battery in a pack that has 50 or more cycles. Either replace all the batteries with new batteries or install a good used battery's in place of the bad. New batteries should be given a full charge before use.

18. Periodic battery testing is an important preventative maintenance procedure. Hydrometer readings of each cell (fully charged) give an indication of balance and true charge level. Imbalance could mean the need for equalizing and is often a sign of improper charging or a bad cell. Voltage checks (open circuit, charged and discharged) can locate a bad cell or weak battery. Load testing will pick out a bad cell when other methods fail. The point is to look for the abnormal. A weak cell or battery will cause premature failure of companion cells or batteries respectively.

19. As batteries age, their maintenance requirements change, Generally their specific gravity is higher and gassing voltage goes up. This means longer charging time and/or higher finish rate (higher amperage at the end of charge). Usually, older batteries need to be watered more often and their capacity decreases.

Courtesy of Crane.Market

20. “Opportunity charging”, a short partial charge during an extended duty cycle, is a controversial subject. Generally, the practice is a “crutch” to make up for undersized batteries. The correct approach is to install adequate battery capacity. If this is impossible because of lack of space in the battery compartment or extreme operating conditions (24 hour intermittent use, as an example), “opportunity charging” is better than excessive battery discharging. However, the practice can cause batteries to overheat, require more watering and usually will shorten battery life. “Opportunity charging” is a trade off; something to avoid if possible. One charging cycle per day is preferable.

21. Extreme temperatures can substantially affect battery performance and charging. Cold reduces battery capacity and retards charging. Heat increases water usage and can result in overcharging. Very high temperature can cause “thermal run away” which may lead to an explosion or fire. If extreme temperature is an unavoidable part of an application, consult a battery/charger specialist about ways to deal with the problem.

22. An overly discharged battery might need to be cycled a few times before it can recover fully. If a battery begins to heat before coming up to a full charge, it might be necessary to discharge the battery and recharge it a few times. The charge and discharge cycle might help the current acceptance of the battery and facilitate its recovery to a usable condition.

23. Inactivity can be harmful to deep cycle batteries. If they sit for several months, a “boost” charge should be given – more frequently in warm climate (about once a month) than in cold (every 2-3 months).

24. Never store a battery in a discharged state. The sulfate that forms during discharge can make the battery impossible to recharge fully.

Courtesy of Crane.Market

Fastener Torque Chart – Standard System

Bolt Grade	SAE Grade 1 or 2	SAE Grade 5	SAE Grade 6	SAE Grade 8
Marking				
Definition	Indeterminate Quality	Minimum Commercial Quality	Medium Commercial Quality	Best Commercial Quality
Material	Low Carbon Steel	Medium Carbon Steel Tempered	Medium Carbon Steel Quenched and Tempered	Medium Carbon Alloy Steel Quenched and Tempered
Minimum Tensile Strength	64,000 psi.	105,000 psi	133,000 psi.	150,000 psi
Bolt Size	Recommended Torque Value (ft lbs)			
1/4	5	7	10	10.5
5/16	9	14	19	22
3/8	15	25	34	37
7/16	24	40	55	60
1/2	37	60	85	92
9/16	53	88	120	132
5/8	74	120	167	180
3/4	120	200	280	296
7/8	190	302	440	473
1	282	466	660	714

Torque chart information:

- Consult manufacturers' specific recommendations, when available.
- The chart may be used with both coarse and fine thread fasteners lightly lubricated.
- Increase torque by 20% when multiple tapered tooth (shake proof) lock washers are used.
- The torque values are given in foot-pounds.
- Inch/pound equivalent may be obtained by multiplying by 12.

Courtesy of Crane.Market

Fastener Torque Chart – Metric System

Capscrew	Grade 8.8					Grade 10.9				
Size	In-LBS Dry	In-LBS Lubed	FT-LBS Dry	FT-LBS Lubed	Clamp Load (lb)	In-LBS Dry	In-LBS Lubed	FT-LBS Dry	FT-LBS Lubed	Clamp Load (lb)
M4 - 0.7	27	20			861	36	24			1,173
M5 - 0.8	55	41			1,394	72	60			1,895
M6 - 1.0	93	70			1,971	132	96			2,686
M8 - 1.25	228	168	19	14	3,591	312	228			4,889
M8 - 1.0	240	180	20	15	3,844	336	252			5,232
M10 - 1.5			37	28	5,693			51	38	7,744
M10 - 1.25			39	30	6,008			54	41	8,171
M12 - 1.75			65	49	8,273			89	66	11,257
M12 - 1.25			71	53	9,037			96	72	12,297
M14 - 2.0			103	77	11,285			140	107	15,354
M14 - 1.5			114	85	12,263			155	114	16,691
M16 - 2.0			162	122	15,404			221	166	20,963
M16 - 1.5			173	129	16,388			236	177	22,311
M18 - 2.5			222	167	19,423			235	176	
M18 - 1.5										
M20 - 2.5			317	236	24,042			428	321	32,720
M20 - 1.5			350	262	26,695			479	358	36,316
M22 - 2.5			428	321	30,651			452	339	
M22 - 1.5										
M24 - 3.0			546	409	34,642			745	557	47,141
M24 - 2.0			594	446	37,676			811	605	51,277
M27 - 3.0			796	597	45,039			1,084	811	61,292
M27 - 2.0			863	645	58,785			1,173	848	66,226
M30 - 3.5			1084	811	55,054			1,475	1106	74,915
M30 - 3.0			1121	841	56,908			1,527	1143	77,444
M30 - 2.0			1202	900	60,932			1,630	1224	82,917

Rev D

Torque chart information:

- Consult manufacturers' specific recommendations, when available.
- The chart may be used with both coarse and fine thread fasteners lightly lubricated.
- Increase torque by 20% when multiple tapered tooth (shake proof) lock washers are used.
- Foot/pound equivalent may be obtained by dividing by 12.
- Inch/pound equivalent may be obtained by multiplying by 12.
- Newton/meter equivalent may be obtained by multiplying inch/pound by 0.1130.
- Newton/meter equivalent may be obtained by multiplying foot/pound by 1.3558.

Courtesy of Crane.Market

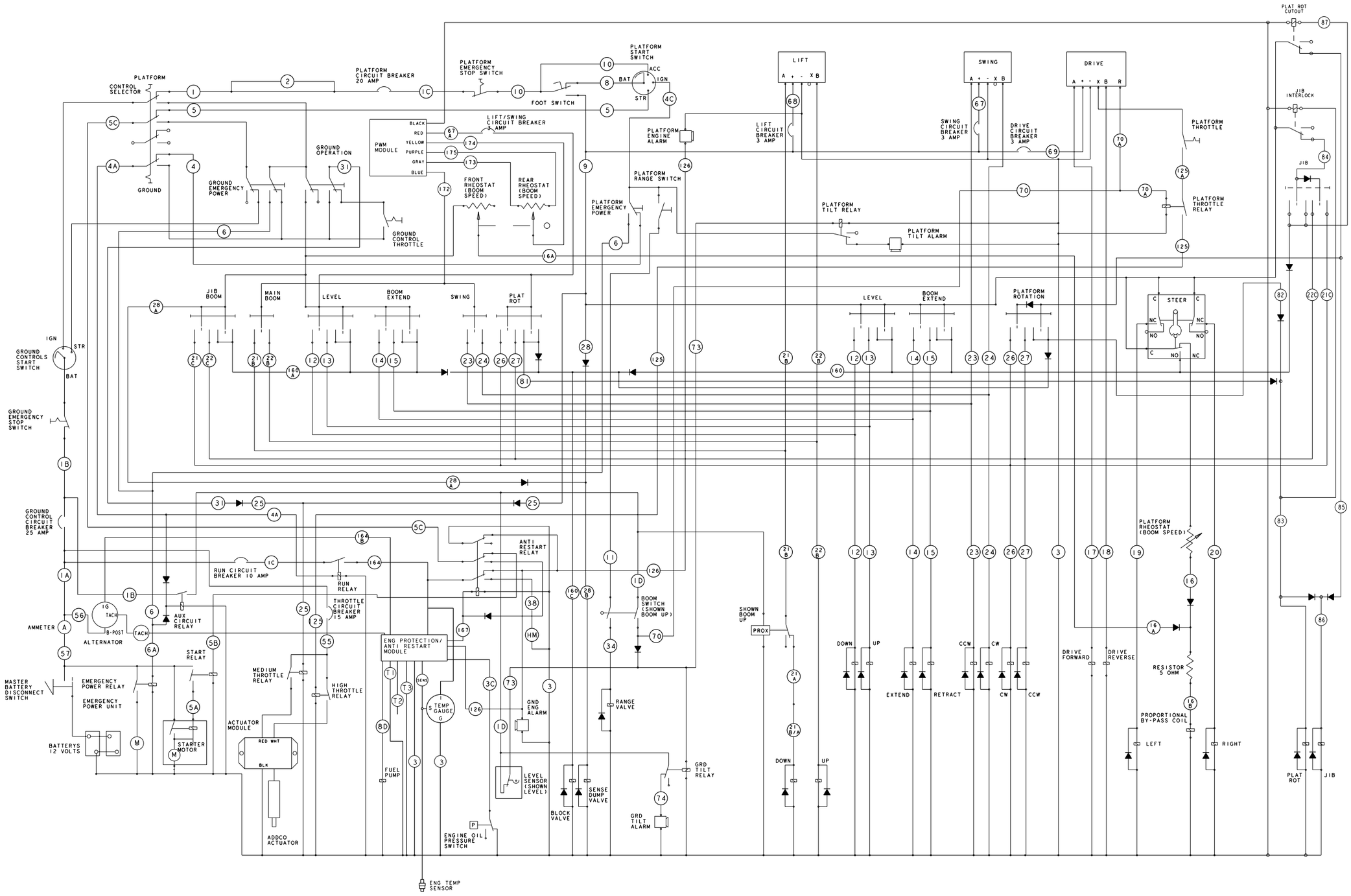

Electrical Schematic Cummins 3.3 Tier 3 – Addco Actuator

A08150A

Electrical Schematic – 1

Schematics

Courtesy of Crane.Market

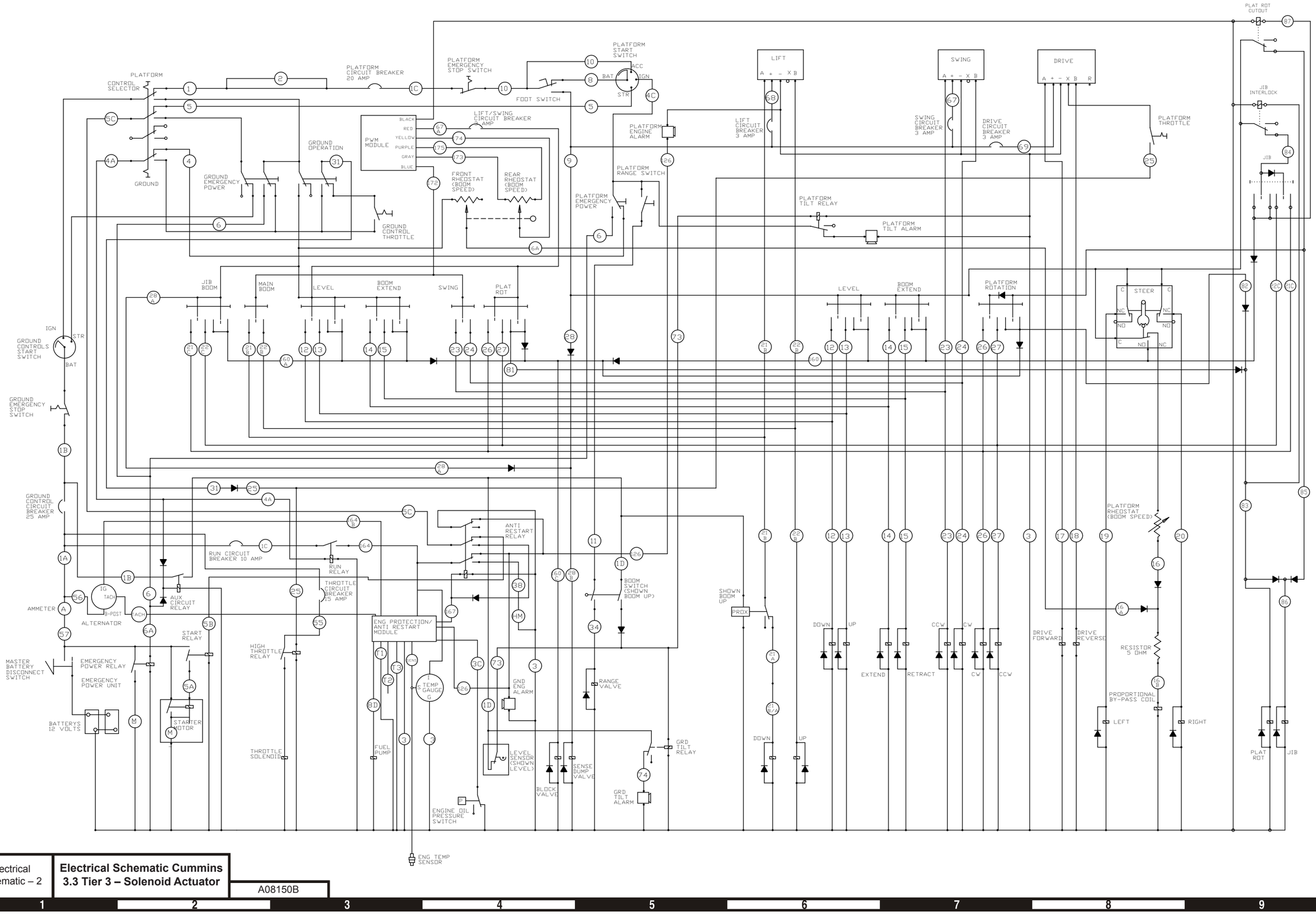

Electrical Schematic – 2	**Electrical Schematic Cummins 3.3 Tier 3 – Solenoid Actuator**	A08150B

Courtesy of Crane.Market

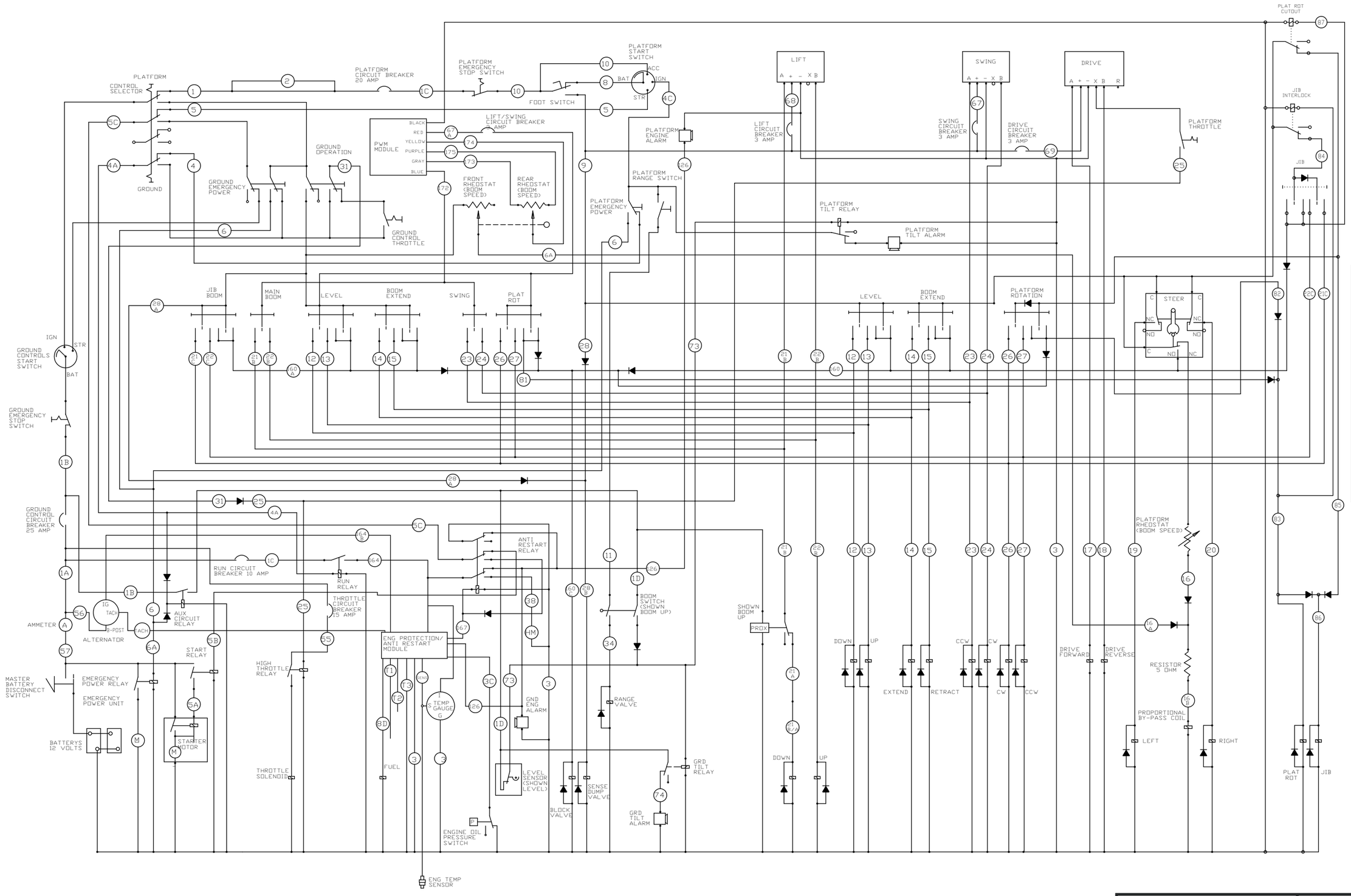

Electrical Schematic Deutz F4L-1011F – Solenoid Actuator

A08151A

Electrical Schematic – 3

Schematics

Courtesy of Crane.Market

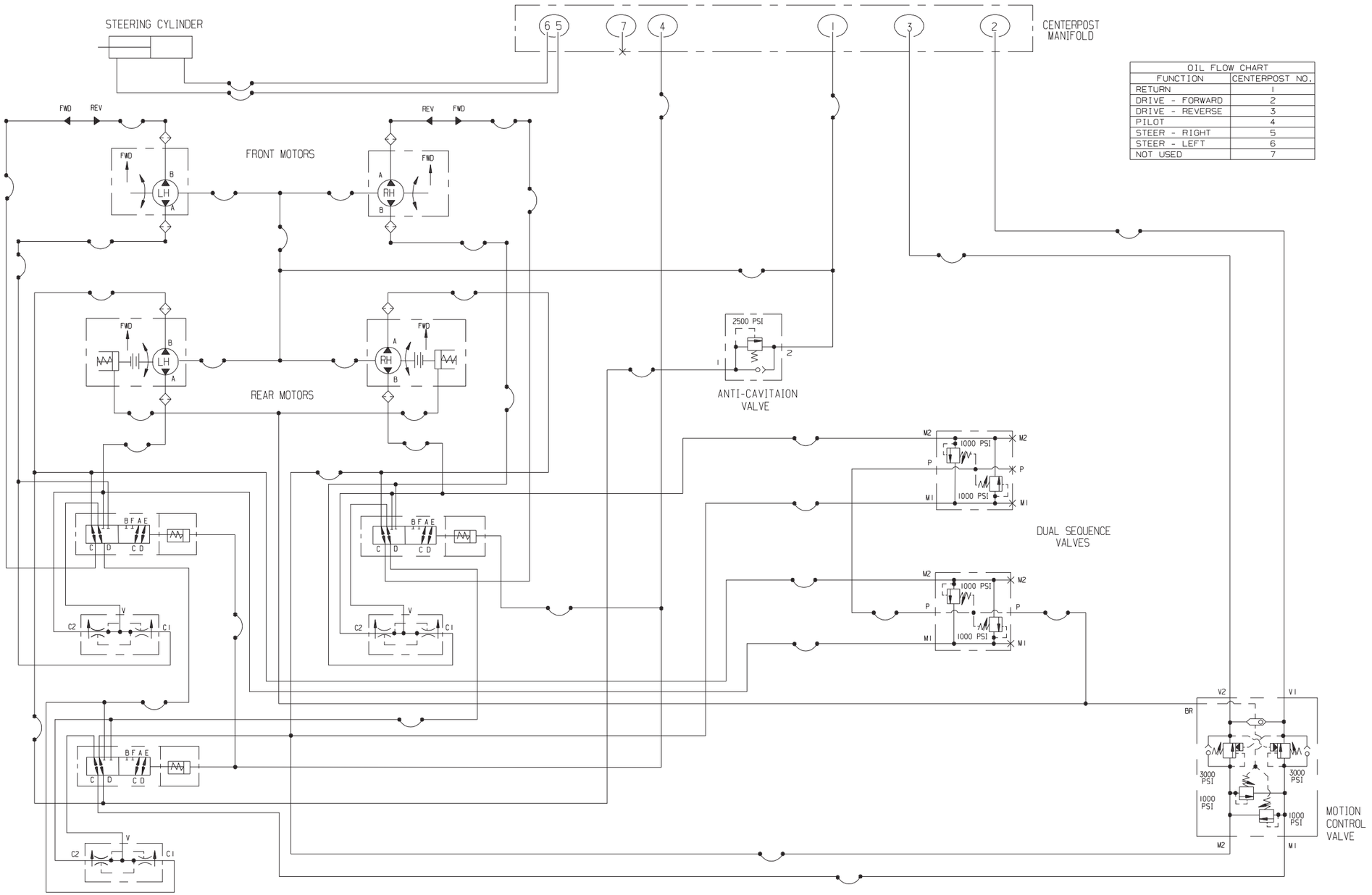

OIL FLOW CHART	
FUNCTION	CENTERPOST NO.
RETURN	1
DRIVE - FORWARD	2
DRIVE - REVERSE	3
PILOT	4
STEER - RIGHT	5
STEER - LEFT	6
NOT USED	7

Schematics

Hydraulic Schematic Chassis

Hydraulic Schematic – 1

Courtesy of Crane.Market

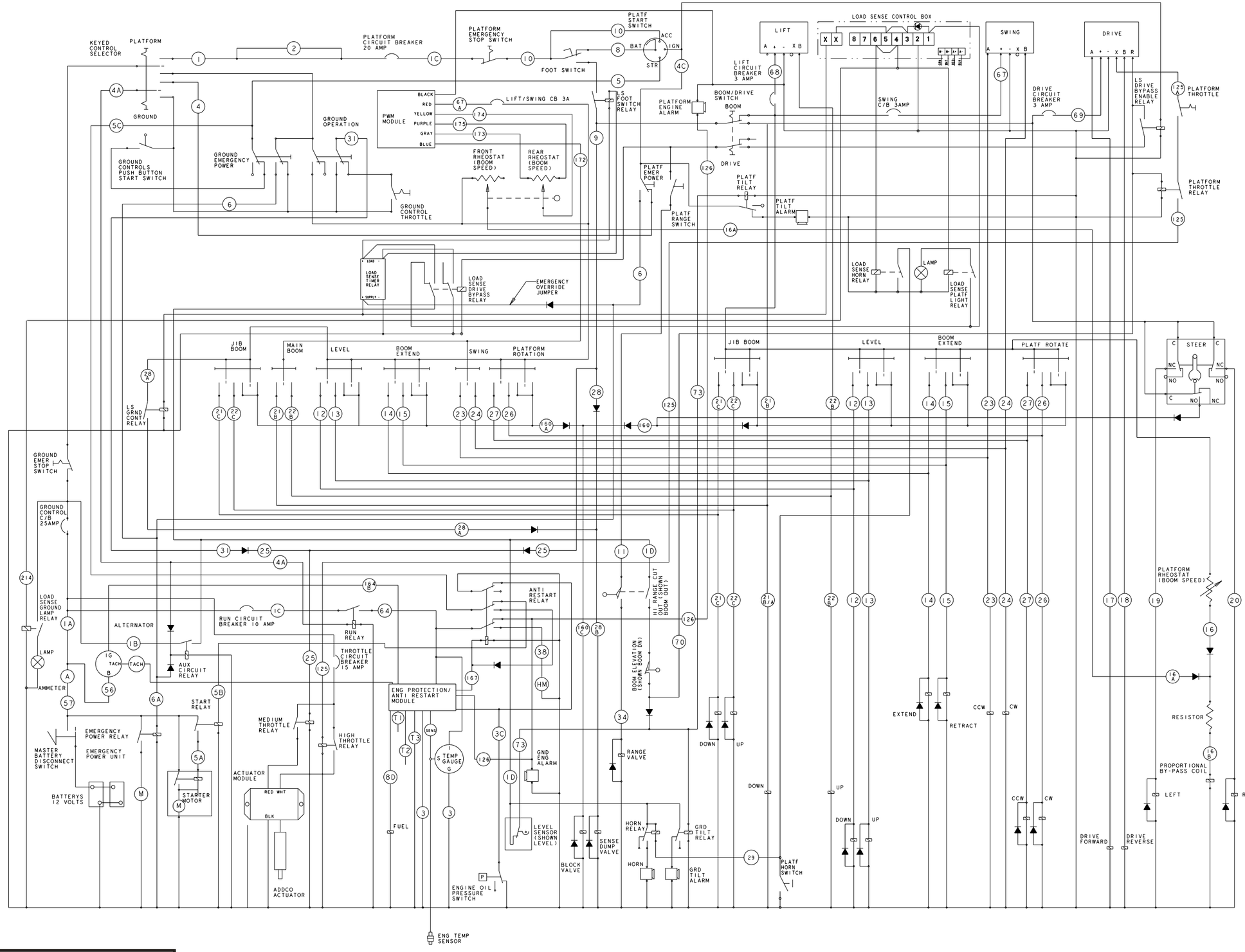

Hydraulic Schematic – 2	**Hydraulic Schematic Turntable/Booms**	A08147A

Courtesy of Crane.Market

Appendix A:Pages Index

110V AC GENERATOR MOUNTING – AFTER APRIL 2014 5-37
110V AC GENERATOR MOUNTING – AFTER SEPTEMBER 2006 ..... 5-36, 5-39
110V AC GENERATOR MOUNTING – BEFORE OCTOBER 2006 5-35
110V AC GENERATOR – BEFORE OCTOBER 2006 5-38
110V POWER OUTLET INSTALLATION . 4-42
12 KW GENERATOR ASSEMBLY – FABCO 5-45
12 KW GENERATOR ASSEMBLY – TENDAIRE 5-46
12 KW GENERATOR BOOM ELECTRICAL INSTALLATION 5-50
12 KW GENERATOR CIRCUIT BREAKER WIRING 5-49
12 KW GENERATOR HOSE CARRIER ASSEMBLY 5-52
12 KW GENERATOR INSTALLATION . 5-44
12 KW GENERATOR PLATFORM CONTROL BOX 5-51
12 KW GENERATOR VALVE ASSEMBLY .. 5-47
12 KW GENERATOR WIRING BOX ASSEMBLY 5-48
12 kW GENERATOR HOSE/CABLE CLAMP INSTALLATION 5-53
6 FT JIB ASSEMBLY ANSI – S/N TB66J-04-000100 AND AFTER 2-36
6 FT JIB ASSEMBLY CE – AFTER MARCH 2015 2-37
AC GENERATOR VALVE 3-24
ACCUMULATOR 3-18
AIR CLEANER INSTALLATION GM 2-55
AIR CLEANER – CU/FORD/GM 2-59
AIR CLEANER – DEUTZ 2-57
AIR INLET HEATER – DEUTZ 5-9
AIRLINE TO PLATFORM 5-27
ANTI-CAVITATION VALVE 3-21
ANTI-CAVITATION VALVE – AFTER JULY 2005 ... 3-20
ANTI-CAVITATION VALVE – BEFORE AUGUST 2005 3-19
BOOM AND HOSE CARRIER – S/N TB66J-04-000099 AND BEFORE 2-22
BOOM INSTALLATION CE – AFTER JUNE 2014 .. 4-26
BOOM INSTALLATION CE – KU 4-30
BOOM INSTALLATION – AFTER JUNE 2008 ... 4-25, 4-32
BOOM INSTALLATION – BEFORE JULY 2008 .. 4-31
BOOM SWITCH 4-1
BOOM/HOSE CARRIER/JIB ASSEMBLY ANSI – AFTER APRIL 2015 2-24
BOOM/HOSE CARRIER/JIB ASSEMBLY ANSI – S/N TB66J-04-000100 AND AFTER 2-23
BOOM/HOSE CARRIER/JIB ASSEMBLY CE – AFTER MARCH 2015 2-25
BOOMS ASSEMBLY – AFTER APRIL 2015 ... 2-32
BOOMS ASSEMBLY – S/N TB66J-04-000100 AND AFTER 2-31
BOOMS – AFTER APRIL 2009 2-33
BOOMS – AFTER JULY 2006 2-30
BOOMS – BASE END 2-21

Courtesy of Crane.Market

BOOMS – BEFORE MARCH 2001 2-29
CENTERPOST AND FITTINGS – AFTER MAY 1986 3-38
CENTERPOST AND FITTINGS – BEFORE MAY 1986 3-37
CHASSIS COVER INSTALLATION 4X4 . 2-7
CHASSIS HYDRAULIC EQUIPMENT 4X2 ... 3-57
CHASSIS HYDRAULIC EQUIPMENT 4X4 ... 3-58
CHASSIS/TURNTABLE MOUNTING 4X2 . 2-6
CHASSISS/TURNTABLE MOUNTING 4X2 – BEFORE FEBRUARY 2001 2-1
CHASSISS/TURNTABLE MOUNTING 4X4 .. 2-8
CHECK VALVE 3-25
COLD WEATHER PACKAGE – GM 5-10
CONTROL VALVE ASSEMBLY NON-PROPORTIONAL – FLUIDTECH 3-16
CONTROL VALVE ASSEMBLY NON-PROPORTIONAL – VICKERS 3-15
CONTROLLER – DRIVE/STEER 4-40
CONTROLLER – LIFT/SWING 4-41
COUNTERWEIGHT SUBASSEMBLY 4X4 ... 2-9
CSA PACKAGE 5-32
DRIVE 4X4 – AFTER MARCH 2006 2-11
DRIVE 4X4 – BEFORE APRIL 2006 2-10
DRIVE 4X4, AFTER JULY 2006 2-12
DRIVE 4X4, AFTER MAY 2008 2-13
DRIVE INSTALLATION 4X2 2-2
DRIVE MOTOR 3-2
DRIVE MOTOR WITH INTEGRAL BRAKE .. 3-3
DRIVE SEQUENCE VALVE – LEFT HAND 3-6
DRIVE SEQUENCE VALVE – RIGHT HAND ... 3-7
DRIVE VALVE SUB-ASSEMBLY 3-5
DRIVE/LIFT/SWING CONTROL VALVE 3-10
DRIVE/LIFT/SWING VALVE 3-9
DRIVING AND TAIL LIGHTS – AFTER JUNE 2010 5-18
DRIVING AND TAIL LIGHTS – BEFORE JULY 2010 5-17
DUAL CROSSOVER RELIEF VALVE – SUN .. 3-26
DUAL FUEL ENGINE SUB-ASSEMBLY – FORD LRG 425 5-7
DUAL FUEL GM TIER 2 – BEFORE SEPTEMBER 2007 5-1
DUAL FUEL GM TIER 3 – AFTER AUGUST 2007 .. 5-2
DUAL FUEL – FORD LRG-425 5-5
DUMP VALVE 3-27
EMERGENCY POWER UNIT 3-56
ENGINE DEUTZ F4L-1011F – AFTER FEBRUARY 2009 2-46
ENGINE DEUTZ F4L-1011F – AFTER SEPTEMBER 2006 2-45
ENGINE DEUTZ F4L-1011F – BEFORE OCTOBER 2006 2-44
ENGINE FORD LRG 425 2-49
ENGINE INSTALLATION – GM TIER 3 2-52
ENGINE MOUNTING CUMMINS – BEFORE AUGUST 2008 2-38
ENGINE MOUNTING FORD LRG 425 WITH ECM . 2-47
ENGINE MOUNTING FORD LRG 425 WITH EPM . 2-48

Courtesy of Crane.Market

ENGINE MOUNTING – DEUTZ F4L-1011F . 2-43
ENGINE SUBASSEMBLY – GM TIER 3 .. 2-53
ENGINE SUBASSEMBLY – KU V2403 . 2-56
ENGINE TRAY CUMMINS 3.3 TIER 3 – AFTER JANUARY 2013 2-41
ENGINE TRAY CUMMINS 3.3 TIER 3 – AFTER MARCH 2007 2-39
ENGINE TRAY CUMMINS 3.3 – BEFORE MARCH 2008 2-40
ENGINE/RADIATOR ASSEMBLY – CUMMINS 3.3 TIER 3 2-42
EXHAUST AND AIR CLEANER – DEUTZ 2-58
EXHAUST/AIR CLEANER INSTALLATION FORD – AFTER MARCH 2005 2-51
EXHAUST/AIR CLEANER INSTALLATION FORD – BEFORE APRIL 2005 2-50
EXTENSION CYLINDER ASSEMBLY .. 2-34
EXTENSION CYLINDER – GBI 3-43
EXTENSION CYLINDER – ROSENBOOM .. 3-44
EXTENSION CYLINDER – SEABEE ... 3-45
EXTREME COLD WEATHER PACKAGE – GM 5-11
EXTREME COLD WEATHER PACKAGE – KUBOTA 5-12
FLOW DIVIDER VALVE 3-28
FLOW DIVIDER VALVE SUB-ASSEMBLY .. 3-29
FRONT WHEEL DRIVE 4X4 2-15
FUEL TANK - AFTER MAY 2007 2-19
FUEL TANK – BEFORE JUNE 2007 ... 2-18
GAS ONLY GM TIER 3 – AFTER AUGUST 2007 ... 5-3
GEAR HUB HIGH TORQUE – AUBURN GEAR 3-4
GENERAL INFORMATION 1-1
GLAZIER TRAY ASSEMBLY 5-34
GROUND CONTROL PANEL – DEUTZ F4L-1011F 4-15
HORN 5-25
HOSE CARRIER ASSEMBLY – AFTER APRIL 2015 2-26
HOSE CARRIER ASSEMBLY – SN TB66J-04-000100 AND AFTER 2-28
HOSE CARRIER ASSEMBLY--S/N TB66J-04-000099 AND BEFORE 2-27
HYDRAULIC OIL RESERVIOR MOUNTING .. 2-20
HYDRAULIC OIL RESERVOIR – AFTER JULY 2006 3-1
HYDRAULIC PUMP 3-55
HYDRAULIC WARM-UP 5-13
HYDRAULIC WARM-UP VALVE 3-30, 5-14
ISOLATION VALVE 5-43
JIB BOOM ASSEMBLY 2-35
JIB BOOM LIFT CYLINDER ASSEMBLY 3-46
JIB BOOM LIFT CYLINDER – ROSENBOOM . 3-47
JIB/PLATFORM SELECTOR VALVE ASSEMBLY .. 3-35
LANYARD MOUNT – 1430080 PLATFORM ONLY . 5-30
LEGACY SNORKEL GUARD WIRING 2-76
LEVEL/STEERING CYLINDER – ROSENBOOM 3-39
LIFT CYLINDER ASSEMBLY 3-40
LIFT CYLINDER – GBI 3-41
LIFT CYLINDER – ROSENBOOM 3-42

Courtesy of Crane.Market

LIFT/SWING/COUNTERWEIGHT 2-17
LOWER CONTROL PANEL 4-9
LOWER CONTROL PANEL CUMMINS 3.3 – AFTER NOVEMBER 2007 4-13
LOWER CONTROL PANEL CUMMINS 3.3 – BEFORE APRIL 2006 4-12
LOWER CONTROL PANEL DEUTZ F4L-1011F – BEFORE APRIL 2006 4-14
LOWER CONTROL PANEL KU -- CE .. 4-11
LOWER CONTROL PANEL KU – S/N TB66J-04-000100 AND AFTER 4-10
LOWER CONTROL PANEL – FORD LRG-425 4-16
LOWER CONTROL PANEL – GM TIER 3 4-8
LP FUEL ONLY – FORD LRG-425 5-6
LP ONLY GM TIER 3 – AFTER AUGUST 2007 5-4
MASTER LEVEL CYLINDER ROSENBOOM – S/N TB66J-04-000100 AND AFTER .. 3-49
MASTER LEVEL CYLINDER – ROSENBOOM 3-48
MASTER LEVEL CYLINDER – ROSENBOOM (2) 3-50
MOTION ALARM – ALL MOTION 5-15
MOTION ALARM – DRIVE 5-16
MOTION CONTROL VALVE FLUIDTECH – TURNTABLE SWING 3-13
MOTION CONTROL VALVE ROSS/CHAR-LYNN – TURNTABLE SWING 3-12
MOTION CONTROL VALVE – DRIVE .. 3-11
NON-PROPORTIONAL CONTROL VALVE FLUIDTECH – AFTER JANUARY 2008 3-17
PACKAGE VALVE NON-PROPORTIONAL .. 3-14
PANEL SUBASSEMBLY – AFTER JULY 2008 .. 4-24
PANEL SUBASSEMBLY – BEFORE AUGUST 2008 4-27
PERSONAL FALL ARREST SYSTEM 5-31
PLASTIC COWLING DEUTZ – AFTER OCTOBER 2006 2-61
PLASTIC COWLING DEUTZ – AFTER SEPTEMBER 2014 2-62
PLASTIC COWLING DEUTZ – BEFORE MARCH 2006 2-60
PLATFORM ASSEMBLY STEEL TRI-ENTRY – HELAC ROTATOR (2 OF 2) 2-73
PLATFORM ASSEMBLY STEEL TRI-ENTRY, HELAC ROTATOR (1 OF 2) 2-72
PLATFORM ASSEMBLY ALUMINUM SWING GATE – PARKER ROTATOR 2-71
PLATFORM BUMPGUARD – AFTER MAY 2013 5-29
PLATFORM BUMPGUARD – BEFORE JUNE 2013 5-28
PLATFORM FOOT SWITCH 4-33
PLATFORM GLAZIER PACKAGE 5-33
PLATFORM INSTALLATION ALUMINUM GRAVITY GATE CE – PARKER ROTATOR 2-70
PLATFORM INSTALLATION ALUMINUM GRAVITY GATE – PARKER ROTATOR 2-69
PLATFORM INSTALLATION STEEL GRAVITY GATE – PARKER ROTATOR 2-68
PLATFORM INSTALLATION – HELAC ROTATOR . 2-67
PLATFORM INSTALLATION – PARKER ROTATOR 2-66

Courtesy of Crane.Market

PLATFORM ROTATOR HELAC – BEFORE JUNE 22, 2013 2-74
PLATFORM ROTATOR PARKER – AFTER JUNE 21, 2013 2-75
PLATFORM ROTATOR PARKER – BEFORE NOVEMBER 2014 3-54
PLATFORM WELDER – ALUMINUM PLATFORM 5-41
PLATFORM WELDER – STEEL PLATFORM 5-40
PLATFORM WORK LIGHTS 5-20
PLATFORM/JIB SELECTOR VALVE ... 3-36
RADIATOR ASSEMBLY GM 2-54
SANDBLAST KIT 5-23
SELECTOR VALVE 4X2 3-31
SELECTOR VALVE 4X4 3-32
SELECTOR VALVE – LEFT HAND 3-33
SELECTOR VALVE – RIGHT HAND ... 3-34
SERIES/PARALLEL PACKAGE 4X4 – LEFT HAND 3-23
SERIES/PARALLEL PACKAGE 4X4 – RIGHT HAND 3-22
SLAVE LEVEL CYLINDER ASSEMBLY – S/N TB66J-04-000100 AND AFTER 3-52
SLAVE LEVEL CYLINDER ROSENBOOM – AFTER AUGUST 2000 3-51
SLAVE LEVEL CYLINDER ROSENBOOM – S/N TB66J-04-000100 AND AFTER 3-53
SNORKEL GUARD ASSEMBLY 2-77
SPARK ARRESTOR MUFFLER – DEUTZ ... 5-8
STEEL COWLING FORD/CU – AFTER MAY 2011 2-64
STEEL COWLING FORD/CU – AFTER S/N TB66J-04-000149 2-63
STEEL COWLING FORD/CU/GM/KU – AFTER APRIL 2015 2-65
STEERING 4X2 2-3
STEERING INSTALLATION 4X2 2-4
STEERING YOKE AND WHEEL 4X2 2-5
STEERING YOKE AND WHEEL 4X4 2-14
SWING DRIVE ASSEMBLY 3-8
TB66 ELECTRICAL SCHEMATICS 7-1
TB66 MAINTENANCE 6-1
TB66J HYDRAULIC SCHEMATICS 7-2
TILT ALARM LIGHT 5-21
TOW PACKAGE 5-24
TURNTABLE ELECTRICAL CUMMINS 3.3 – AFTER FEBRUARY 2008 4-2
TURNTABLE ELECTRICAL DEUTZ F4L-1011F – AFTER FEBRUARY 2008 4-5
TURNTABLE ELECTRICAL DEUTZ F4L-1011F – AFTER NOVEMBER 2007, TURNTABLE ELECTRICAL CUMMINS 3.3 – BEFORE MARCH 2008 4-4
TURNTABLE ELECTRICAL DEUTZ F4L-1011F – BEFORE JANUARY 2006 4-3
TURNTABLE ELECTRICAL – FORD LRG-425 . 4-6
TURNTABLE ELECTRICAL – KU 2-16, 4-7
TURNTABLE HYDRAULIC EQUIPMENT – AFTER JANUARY 2007 3-61
TURNTABLE HYDRAULIC EQUIPMENT – BEFORE FEBRUARY 2007 3-59
TURNTABLE HYDRAULIC HOSES – BEFORE FEBRUARY 2007 3-60
UPPER CONTROL BOX CE – KU 4-39
UPPER CONTROL BOX COVER 5-26
UPPER CONTROL BOX HYDRAFORCE – AFTER

Courtesy of Crane.Market

MARCH 2008 4-37
UPPER CONTROL BOX KU – S/N TB66J-04-000100 AND AFTER 4-38
UPPER CONTROL BOX – AFTER FEBRUARY 2008 4-35
UPPER CONTROL BOX – AFTER OCTOBER 2008 4-36
UPPER CONTROL BOX – BEFORE OCTOBER 2007 4-34
UPPER CONTROL COURTESY LIGHT . . 5-22
WARNING LIGHTS 5-19
WELDER ASSEMBLY 5-42
WIRING BOX CE – KU 4-20
WIRING BOX CUMMINS/DEUTZ ADDCO 3 SPEED – AFTER JULY 2008 4-23
WIRING BOX CUMMINS/DEUTZ ADDCO 3 SPEED – BEFORE AUGUST 2008 4-22
WIRING BOX GM TIER 3 – BEFORE OCTOBER 2007 4-17
WIRING BOX KU – AFTER AUGUST 2014 . . 4-19
WIRING BOX PANEL – FORD LRG-425 . . 4-29
WIRING BOX PANEL – GM TIER 3 4-18
WIRING BOX PANEL – KU 4-21
WIRING BOX – FORD LRG-425 4-28

Courtesy of Crane.Market

Appendix B:Parts Index

(NOTE 2) 2-66
0020267 ..... 2-29, 2-30, 2-33, 3-57
0020270 5-44
0020273 ..... 3-58, 3-60, 3-61
0020275 3-57
0020280 ..... 3-60, 3-61
0020283 ... 2-75, 3-8, 3-58, 3-60, 3-61, 5-13
0020372 ..... 3-60, 3-61
0020655 ..... 2-1, 2-6, 2-8, 3-58
0030214 ..... 2-29, 2-30, 2-31, 2-32, 2-33
0040256 2-17
0040276 ..... 3-57, 3-58
0050137 ..... 3-60, 3-61, 5-13, 5-44
0058493-025 2-42
0060089 ..... 2-34, 5-52
0060373 . 4-8, 4-9, 4-10, 4-11, 4-12, 4-13, 4-14, 4-16, 4-33, 4-34, 4-35, 4-36, 4-37, 4-38, 4-39, 5-51
0070021 ..... 2-1, 2-6, 2-8
0070024 2-1
0070026 2-14
0070029 ..... 2-23, 2-25, 2-27, 2-28, 2-34
0070030 ..... 2-29, 2-30, 2-31, 2-32, 2-33
0070031 ..... 2-29, 2-31, 2-32
0070033 . 2-3, 2-4, 2-17, 2-21, 2-23, 2-24, 2-25, 2-29, 2-30, 2-31, 2-33, 2-34, 2-35, 2-66
0070047 ..... 3-8, 3-8, 3-8
0070132 . 2-23, 2-24, 2-25, 2-29, 2-30, 2-33, 2-66, 2-75
0070141 2-34
0070148 ..... 2-39, 2-40, 2-41
0070224 ..... 2-4, 2-10
0070328 ..... 2-1, 2-4
0070331 ..... 5-1, 5-5
0070370 2-68
0070390 ..... 2-29, 2-30, 2-31, 2-32, 2-33
0070440 ..... 2-21, 2-34
0070441 2-66
0070442 ..... 2-3, 2-4, 2-17, 2-29, 2-30, 2-33
0070443 ..... 2-31, 2-32
0070446 ..... 2-23, 2-24, 2-25, 2-66
0070448 ..... 2-29, 2-30, 2-31, 2-32, 2-33
0070472 2-17
0070473 .. 2-3, 2-4, 2-17, 2-21, 2-29, 2-30, 2-31, 2-32, 2-33, 2-34, 2-35, 2-66, 2-75
0070483 ..... 2-18, 2-19, 5-1, 5-3
0070486 ..... 2-29, 2-30, 2-31, 2-32, 2-33
0070504 ..... 2-23, 2-25
0070506 ..... 2-23, 2-25
0070553 2-1
0070570 2-75
0070596 4-33
0070639 ..... 2-29, 2-30, 2-31, 2-32, 2-33
0070681 ..... 4-18, 4-21, 4-24, 4-27, 4-29
0070682 ..... 4-18, 4-21, 4-24, 4-27, 4-29
0070705 ..... 2-16, 4-2, 4-3, 4-4, 4-5, 4-6, 4-7
0070711 .. 4-18, 4-21, 4-24, 4-27, 4-29, 4-34, 4-35, 4-36, 4-37, 4-38, 4-39
0070712 ... 4-34, 4-35, 4-36, 4-37, 4-38, 4-39, 5-49
0070713 .. 4-18, 4-24, 4-27, 4-34, 4-35, 4-36, 4-37, 4-38, 4-39
0070724 ..... 4-3, 4-18, 4-21, 4-24, 4-27, 4-29
0070730 .. 4-8, 4-9, 4-10, 4-11, 4-12, 4-13, 4-14, 4-16, 4-34, 4-35, 4-36, 4-37, 4-38, 4-39, 5-51
0070733 5-25
0070735 .. 4-8, 4-9, 4-10, 4-12, 4-13, 4-14, 4-16, 4-17, 4-19, 4-20, 4-22, 4-23, 4-28

Courtesy of Crane.Market

0070742 . 4-8, 4-9, 4-10, 4-11, 4-12, 4-13, 4-14, 4-16
0070746 . 4-8, 4-9, 4-10, 4-11, 4-12, 4-13, 4-14, 4-16, 4-34, 4-35, 4-36, 4-37, 4-38, 4-39
0070747 . 4-8, 4-9, 4-10, 4-11, 4-12, 4-13, 4-14, 4-16, 4-34, 4-35, 4-36, 4-37, 4-38, 4-39, 5-35, 5-36, 5-37, 5-39
0070753 . 4-8, 4-9, 4-10, 4-11, 4-12, 4-13, 4-14, 4-16, 4-34
0070758 ..... 5-17, 5-18, 5-28, 5-29
0070759 ..... 4-39, 5-25
0070760 5-25
0070764 3-58
0070765 ..... 3-60, 3-61
0070766 5-24
0070768 ..... 2-6, 2-8, 2-31, 2-32, 3-57, 3-58
0070772 ..... 2-23, 2-24, 2-25, 3-57, 3-58
0070781 ..... 3-57, 3-58
0070782 ..... 3-57, 3-58
0070783 ..... 3-57, 3-58
0070786 3-58
0070789 ..... 3-60, 3-61
0070792 ..... 2-47, 2-48, 3-57, 3-58, 5-43
0070838 2-34
0070874 2-66
0070901 2-65
0070908 2-75
0070911 ..... 3-60, 3-61
0070916 2-75
0070921 4-28
0070926 ..... 3-60, 3-61
0070927 ..... 3-60, 3-61, 5-24
0070967 . 4-17, 4-19, 4-20, 4-22, 4-23, 4-28, 4-33, 4-34, 4-35, 4-36, 4-37, 4-38, 4-39
0070969 ..... 5-1, 5-4, 5-5, 5-6
0070974 ..... 5-1, 5-4, 5-5, 5-6
0070991 ..... 3-37, 3-38
0071216 ..... 2-29, 2-30, 2-31, 2-32, 2-33
0071269 5-25
0071272 2-34
0071275 3-54
0071276 2-68
0071341 2-34
0071342 2-34
0071395 5-19
0071425 2-73
0071494 2-3
0071510 ..... 2-50, 2-55, 2-58
0071511 ..... 4-34, 4-35, 4-36, 4-37, 4-38, 4-39
0071517 ..... 5-35, 5-36, 5-37, 5-39, 5-51
0071528 .. 4-17, 4-19, 4-20, 4-22, 4-23, 4-28, 5-28, 5-29
0071534 ..... 4-34, 4-35, 4-36, 4-37, 4-38, 4-39
0071541 .. 4-8, 4-9, 4-10, 4-11, 4-12, 4-13, 4-14, 4-16, 5-35, 5-36, 5-37, 5-39, 5-51
0071555 ..... 4-9, 4-10, 4-11, 4-13, 4-28
0071556 2-76
0071557 ... 4-34, 4-35, 4-36, 4-37, 4-38, 4-39, 5-25
0071558 4-39
0071559 2-52
0071561 ..... 4-17, 4-19, 4-22, 4-23, 4-28
0071563 ..... 2-49, 4-6
0071565 ..... 4-9, 4-13
0071568 ..... 2-16, 4-7, 5-9
0071582 4-42
0071583 ..... 4-9, 4-12, 4-13, 4-14
0071588 ..... 4-10, 4-11
0071589 ..... 4-12, 4-14

Courtesy of Crane.Market

0071599 ..... 2-43, 2-47, 2-48
0071654 5-26
0071778 4-28
0071792 5-13
0071793 5-13
0071800 . 2-66, 4-25, 4-26, 4-30, 4-31, 4-32, 5-50
0071805 ..... 3-30, 5-14
0071812 . 4-3, 4-4, 4-5, 4-6, 4-18, 4-20, 4-21, 4-24, 4-27, 4-29
0071837 ..... 2-71, 2-72, 2-73
0071844 5-13
0071859 2-66
0071918 ..... 3-41, 3-43, 3-45
0071921 2-30
0071940 ..... 2-18, 2-19, 5-1, 5-3
0071951 ..... 2-66, 2-68
0071953 ..... 2-66, 2-68, 2-72, 2-73
0071995 2-51
0072004 5-22
0072012 5-22
0072015 ..... 2-23, 2-25
0072135 5-5
0072203 5-24
0072209 5-19
0072214 5-24
0072216 5-24
0072224 5-24
0072225 5-24
0072226 5-24
0072293 5-51
0072418 ..... 5-17, 5-18
0072438 2-14
0072508 2-75
0072530 ... 4-34, 4-35, 4-36, 4-37, 4-38, 4-39, 5-51
0072541 4-34
0072552 2-66
0072561 2-75
0072562 2-75
0072567 ..... 2-29, 2-30, 2-31, 2-32, 2-33
0072570 3-58
0072681 ..... 2-29, 2-30, 2-31, 2-32, 2-33
0072682 ..... 2-29, 2-30, 2-31, 2-32, 2-33
0072683 ..... 2-29, 2-30, 2-31, 2-32, 2-33
0072737 ..... 2-27, 2-28
0072743 ..... 2-27, 2-28
0072751 ..... 2-29, 2-30, 2-31, 2-32, 2-33
0072818 2-75
0072910 ..... 2-27, 2-28
0072934 ..... 2-27, 2-28
0072935 ..... 2-27, 2-28
0072936 ..... 2-27, 2-28
0072937 ..... 2-23, 2-25
0072940 ..... 3-59, 3-61
0072951 ..... 2-23, 2-25
0073026 2-17
0073051 ..... 4-2, 4-3, 4-4, 4-5, 4-6
0073057 ..... 4-17, 4-19, 4-20, 4-22, 4-23, 4-28
0073071 5-16
0073076 5-26
0073089 ..... 4-2, 4-3, 4-4, 4-5, 4-6
0073111 ..... 2-29, 2-30, 2-31, 2-32, 2-33
0073158 ..... 2-60, 2-61, 2-62
0073250 ..... 5-17, 5-18, 5-28, 5-29
0073253 ..... 4-24, 4-27
0073281 3-54
0073286 3-45
0073295 ..... 4-34, 4-35, 4-36, 4-38, 4-39

Courtesy of Crane.Market

0073340 ..... 2-29, 2-30, 2-31, 2-32, 2-33
0073342 ..... 2-29, 2-30, 2-31, 2-32, 2-33
0073343 ..... 2-29, 2-30, 2-31, 2-32, 2-33
0073359 3-8
0073444 5-7
0073481 ..... 2-60, 2-61, 2-63, 2-64, 2-65
0073543 5-35
0073544 5-35
0073620 3-27
0073631 . 4-18, 4-21, 4-24, 4-27, 4-29, 4-38, 4-39
0073642 5-16
0073668 ..... 4-34, 4-36
0073727 ..... 5-21, 5-32
0073728 ..... 4-38, 4-39
0073781 5-9
0073884 ..... 4-38, 4-39
0073885 ..... 4-35, 4-36, 4-37, 4-38, 4-39
0074096 ..... 2-72, 2-73
0074368 4-42
0074372 2-65
0074579 ..... 4-3, 4-4, 4-5
0074585 ..... 4-12, 4-14
0074589 4-39
0074592 ..... 4-8, 4-9, 4-10, 4-13
0074615 ..... 2-39, 2-40, 2-41
0074622 ..... 2-39, 2-40, 2-41
0074625 ..... 2-39, 2-40, 2-41
0074628 ..... 2-39, 2-40, 2-41
0074630 2-54
0074634 ..... 2-38, 2-42
0074639 ..... 2-29, 2-30, 2-31, 2-32, 2-33
0074641 ..... 2-38, 2-42
0074644 ..... 2-38, 2-42
0074645 ..... 2-38, 2-42
0074664 ..... 2-38, 2-42
0074684 ..... 2-38, 2-42
0074685 ..... 2-38, 2-42
0074687 ..... 2-38, 2-42
0074688 ..... 2-38, 2-42
0074779 ..... 5-17, 5-18
0074782 5-26
0074786 ..... 2-38, 2-42
0074799 ..... 2-3, 2-4, 3-39
0074926 5-32
0074972 2-39
0074979 4-42
0075234 5-32
0075235 5-32
0075254 2-53
0075268 ..... 2-16, 4-2, 4-4, 4-5, 4-6, 4-7, 5-12
0075372 2-73
0075378 3-61
0075379 3-61
0075380 3-61
0075415 2-53
0075560 2-41
0075621 2-46
0075622 2-46
0075623 2-41
0075624 2-41
0075737 2-56
0075738 2-56
0075743 2-56
0075745 2-56
0075748 2-56
0075751 2-56
0075753 2-56

Courtesy of Crane.Market

0075756 2-56
0080019 2-34
0080020 2-17
0080023 ..... 2-17, 2-21
0080024 2-21
0080026 2-21
0080028 2-21
0080031 ..... 2-18, 2-19, 5-3
0080053 2-17
0080054 ..... 2-16, 4-7
0080061 ..... 3-40, 3-41
0080063 2-3
0080098 ..... 2-3, 2-4
0080181 2-5
0080182 ..... 2-3, 2-4
0080183 ..... 2-3, 2-4
0080184 2-3
0080185 ..... 2-4, 2-5
0080186 ..... 2-4, 2-5
0080187 2-3
0080284 ..... 2-27, 2-28
0080293 ..... 2-29, 2-30, 2-31, 2-32, 2-33
0080294 ..... 2-29, 2-30, 2-31, 2-32, 2-33
0080303 2-6
0080326 ..... 5-1, 5-5
0080348 ..... 2-3, 2-4
0080349 2-5
0080359 ..... 3-60, 3-61
0080362 ..... 3-58, 3-60, 3-61, 5-44
0080365 2-5
0080425 3-1
0080473 3-43
0080482 ..... 2-16, 4-2, 4-3, 4-4, 4-5, 4-6, 4-7
0080483 ..... 2-16, 4-2, 4-3, 4-4, 4-5, 4-6, 4-7
0080484 ..... 2-16, 4-2, 4-3, 4-4, 4-5, 4-6, 4-7, 5-12
0080511 3-5
0080512 3-5
0080513 3-5
0080514 3-5
0080522 ..... 2-43, 3-57, 3-58, 5-36, 5-39
0080524 ..... 3-57, 3-58
0080528 ..... 3-31, 3-33, 3-34
0080529 ..... 3-22, 3-23, 3-31, 3-32, 3-33, 3-34
0080543 ..... 3-57, 3-58
0080615 3-41
0080621 5-23
0080626 ..... 2-63, 2-64, 2-65
0080642 5-23
0080668 ..... 5-1, 5-4, 5-5, 5-6
0080676 ..... 5-4, 5-6
0080679 ..... 2-50, 2-58
0080749 5-27
0080752 5-27
0080754 5-27
0080759 5-44
0080766 ..... 5-1, 5-5
0080767 ..... 5-1, 5-5
0080768 5-20
0080825 2-45
0080843 ..... 3-60, 3-61
0080885 ..... 2-14, 2-15
0080914 2-41
0080919 ..... 2-7, 2-14
0080920 ..... 2-7, 2-14
0080928 3-58
0080929 3-58
0080930 3-58
0080931 3-58

Courtesy of Crane.Market

0080932 3-58
0080934 3-58
0080936 3-58
0080937 3-58
0080939 3-58
0080940 3-58
0080941 3-58
0080945 3-58
0080948 2-14
0080958 3-58
0080962 ..... 2-23, 2-25
0080965 ..... 2-2, 2-14
0080965/66 2-15
0080966 ..... 2-2, 2-14
0080975 ..... 2-34, 3-43, 3-45
0080980 2-34
0081023 2-4
0081042 ..... 3-57, 3-58
0081052 2-58
0081053 2-58
0081063 5-24
0081089 5-52
0081090 5-52
0081117 ..... 2-60, 2-61, 2-62
0081127 ..... 3-31, 3-32, 3-33, 3-34
0081181 3-5
0081226 ..... 2-44, 2-45, 2-46
0081357 ..... 2-63, 2-64, 2-65
0081377 ..... 5-4, 5-6
0081384 ..... 5-21, 5-32
0081422 5-16
0081423 3-57
0081424 ..... 3-5, 3-29
0081425 3-5
0081441 ..... 5-1, 5-4, 5-5, 5-6
0081462 ..... 2-2, 2-14
0081464 ..... 2-47, 2-48
0081486 ..... 2-17, 3-37, 3-38
0081515 ..... 4-18, 4-21, 4-24, 4-27, 4-29
0081547 ..... 3-28, 3-58
0081559 .. 4-17, 4-18, 4-19, 4-20, 4-21, 4-22, 4-23, 4-24, 4-27, 4-28, 4-29
0081560 ..... 4-18, 4-21, 4-24, 4-27, 4-29
0081562 3-1
0081595 3-33
0081596 ..... 3-31, 3-32
0081597 3-31
0081598 3-5
0081600 ..... 3-57, 3-58
0081601 3-58
0081604 ..... 3-57, 3-58
0081614 ..... 2-44, 2-45
0081619 ..... 2-44, 2-45
0081624 ..... 2-44, 2-45
0081630-99 2-43
0081631-99 2-43
0081639 2-58
0081640 2-58
0081670 ..... 2-60, 2-61
0081671 ..... 2-60, 2-61, 2-62
0081674 ..... 2-2, 2-10, 2-14, 3-4
0081719 ..... 2-29, 2-30, 2-33
0081720 ..... 2-29, 2-30, 2-31, 2-33
0081730 ..... 2-29, 2-30, 2-31, 2-32, 2-33
0081731 2-34
0081736 2-34
0081738 2-29
0081745 ..... 2-29, 2-30, 2-31, 2-32, 2-33

Courtesy of Crane.Market

0081749 ..... 2-29, 2-30, 2-31, 2-32, 2-33
0081752 ..... 2-29, 2-30, 2-31, 2-32, 2-33
0081759 ..... 2-29, 2-30, 2-31, 2-32, 2-33
0081761 2-34
0081763 2-34
0081774 ..... 2-29, 2-30, 2-31, 2-32, 2-33
0081776 .. 2-29, 2-30, 2-31, 2-32, 2-33, 2-34
0081782 ..... 2-29, 2-30, 2-31, 2-33
0081819 4-16
0081845 ..... 4-12, 4-14
0081846 ..... 4-3, 4-4, 4-6
0081860 ..... 2-47, 2-48
0081873 ..... 3-59, 3-61
0081875 2-20
0081931 2-34
0081932 2-34
0081940 ..... 2-29, 2-30
0081941 ..... 2-29, 2-30
0081942 ..... 2-29, 2-30
0081953 ..... 2-29, 2-30, 2-31, 2-32, 2-33
0081974 ..... 4-3, 4-4, 4-5, 4-6
0081975 ..... 2-29, 2-30, 2-31, 2-32, 2-33
0081976 4-1
0081979 .. 4-34, 4-35, 4-36, 4-37, 4-38, 4-39
0081980 ..... 3-59, 3-61
0081981 ..... 3-59, 3-61
0081982 ..... 3-59, 3-61
0081986 2-66
0081992 ..... 3-60, 3-61
0081996 .. 4-17, 4-19, 4-20, 4-22, 4-23, 4-28
0081997 .. 4-17, 4-19, 4-20, 4-22, 4-23, 4-28
0081998 ..... 4-2, 4-3, 4-4, 4-5
0082000 3-59
0082002 . 4-8, 4-9, 4-10, 4-11, 4-12, 4-13, 4-14, 4-16, 4-37, 4-38, 4-39
0082003 4-16
0082007 ..... 4-34, 4-35, 4-36, 4-37, 4-38, 4-39
0082010 ..... 3-14, 3-16
0082013 ..... 2-43, 2-44
0082019 2-29
0082023 ..... 2-23, 2-25
0082029 ..... 4-3, 4-4
0082043 ..... 5-10, 5-11, 5-12
0082045 ..... 2-39, 2-40, 2-41, 2-44
0082053 5-13
0082055 ..... 3-59, 3-61
0082064 5-9
0082096 5-8
0082097 5-8
0082098 5-8
0082099 ..... 2-31, 2-32
0082138 .. 2-38, 2-42, 2-44, 2-45, 2-46, 2-49, 2-53, 2-56
0082149 ..... 2-29, 2-30
0082160 5-24
0082164 5-24
0082184 2-66
0082185 2-5
0082203 5-24
0082205 2-5
00822311 ..... 2-64, 2-65
0082234 2-69
0082235 2-69
0082276 2-69
0082282 ..... 2-4, 2-14
0082288 ..... 2-60, 2-61, 2-62, 2-64, 2-65
0082290 ..... 2-60, 2-61, 2-62, 2-63, 2-64, 2-65
0082293 ..... 2-60, 2-61, 2-62, 2-63, 2-64, 2-65

Courtesy of Crane.Market

0082294 . . 2-60, 2-61, 2-62, 2-63, 2-64, 2-65
0082298 2-63
0082303 . . 2-60, 2-61, 2-62, 2-63, 2-64, 2-65
0082304 . . 2-60, 2-61, 2-62, 2-63, 2-64, 2-65
0082307 . . 2-60, 2-61, 2-62, 2-63, 2-64, 2-65
0082310 . . 2-60, 2-61, 2-62, 2-63, 2-64, 2-65
0082311 . . . . . 2-60, 2-61, 2-62, 2-63
0082312 . . . . . 2-16, 4-7
0082320 . . 2-60, 2-61, 2-62, 2-63, 2-64, 2-65
0082321 . . 2-60, 2-61, 2-62, 2-63, 2-64, 2-65
0082334 5-27
0082346 . . 2-60, 2-61, 2-62, 2-63, 2-64, 2-65
0082349 . . 2-60, 2-61, 2-62, 2-63, 2-64, 2-65
0082546 . . 2-60, 2-61, 2-62, 2-63, 2-64, 2-65
0082547 . . 2-60, 2-61, 2-62, 2-63, 2-64, 2-65
0082688 4-28
0082689 4-6
0082694 2-50
0082727 4-16
0082906 2-18
0082937 2-50
0082981 4-6
0083153 2-54
0083155 . . . . . 2-39, 2-40, 2-41
0083165 . . . . . 2-38, 2-42
0083167 . . . . . 2-38, 2-42
0083175 . . . . . 2-38, 2-42
0083274 . . 2-60, 2-61, 2-62, 2-63, 2-64, 2-65
0083300 . . . . . 4-12, 4-15
0083368 2-47
0083395 . . . . . 4-3, 4-4, 4-5
0083401 . . . . . 4-3, 4-4, 4-5
0083416 . . . . . 2-3, 2-4
0083418 2-4
0083437 . . . . . 2-39, 2-40, 2-41
0083438 . . . . . 2-16, 4-7
0083445 . . . . . 2-38, 2-42
0083467 . . . . . 4-22, 4-23
0083472 . . . . . 2-34, 3-44
0083473 . . . . . 3-40, 3-42
0083495 . . . . . 2-11, 2-12, 2-13, 2-15
0083501 . . . . . 2-38, 2-42, 2-52
0083507 . . . . . 5-1, 5-4, 5-6
0083508 4-2
0083529 2-40
0083531 4-2
0083544 . . . . . 2-38, 2-42
0083562 . . . . . 2-3, 2-4
0083570 . . . . . 2-39, 2-40
0083571 2-4
0083573 . . . . . 2-14, 2-15
0083586 . . . . . 2-39, 2-40
0083587 . . . . . 2-39, 2-40
0083694 3-48
0083735 5-32
0083744 2-29
0083778 . . . . . 4-21, 4-24, 4-27
0083783 2-48
0083794 5-52
0083796 5-52
0083802 5-52
0083807 5-52
0083823 . . . . . 5-40, 5-41
0083825 . . . . . 5-40, 5-41
0083826 . . . . . 5-40, 5-41
0083833 . . . . . 5-40, 5-41
0083857 . . . . . 5-40, 5-41
0083858 . . . . . 5-40, 5-41

Courtesy of Crane.Market

0083860 ..... 5-48, 5-51
0083861 5-48
0083862 ..... 5-40, 5-41
0083863 ..... 5-40, 5-41
0083909 2-51
0083911 2-51
0083914 2-51
0083915 2-48
0083919 2-51
0083922 4-6
0083923 ..... 2-63, 2-64, 2-65
0083938 2-48
0083946 2-51
0083954 ..... 5-36, 5-37, 5-39, 5-44
0083956 5-51
0083965 5-49
0083966 5-44
0083967 5-49
0083968 5-48
0083969 5-48
0083970 5-44
0083971 5-44
0083972 5-48
0083973 5-48
0083981 5-47
0083982 5-44
0083983 5-47
0083984 5-44
0083985 ..... 5-40, 5-41
0083986 5-44
0083988 ..... 5-45, 5-46, 5-48, 5-51
0083989 5-44
0084017 5-32
0084019 5-27
0084045 2-53
0084046 2-52
0084047 2-52
0084048 2-52
0084055 2-54
0084058 2-52
0084061 2-53
0084062 2-53
0084063 2-55
0084064 2-55
0084080 2-52
0084081 2-52
0084084 ..... 5-40, 5-41
0084085 ..... 5-36, 5-37, 5-39
0084094 ..... 2-62, 2-64, 2-65
0084096 2-52
0084114 4-17
0084116 4-18
0084120 5-3
0084121 ..... 2-18, 2-19, 5-3
0084127 4-8
0084130 5-3
0084132 5-3
0084133 5-3
0084134 2-53
0084135 ..... 4-35, 4-36, 4-37, 4-38, 4-39
0084136 ..... 4-2, 4-5
0084147 3-61
0084157 4-15
0084172 5-53
0084174 5-50
0084181 4-11
0084187 4-26
0084189 4-39

Courtesy of Crane.Market

0084190 4-39
0084228 2-46
0084233 2-46
0084235 2-46
0084238 2-62
0084280 2-21
0084282 ..... 2-26, 2-27, 2-28
0084283 ..... 2-26, 2-27, 2-28
0084342 2-65
0084343 2-65
0084344 2-65
0084346 2-65
0084347 2-65
008441 2-23
0084458 2-9
0084466 2-72
0084485 2-9
0084486 2-9
0084524 2-65
0084525 2-65
0084529 2-65
0084536 ..... 2-31, 2-32, 2-33
0084537 ..... 2-31, 2-32, 2-33
0084538 2-72
0084570 ..... 2-18, 2-19
0084695 2-26
0084703 ..... 4-19, 4-20
0084708 ..... 2-16, 4-7
0084717 2-56
0084735 ..... 2-36, 2-37
0084741 ..... 2-24, 2-25
0084749 2-23
0084750 ..... 2-23, 2-25
0084751 ..... 2-23, 2-25, 2-31
0084752 ..... 2-23, 2-24, 2-36
0084753 ..... 2-31, 2-32
0084754 ..... 2-23, 2-24, 2-25
0084765 ..... 2-23, 2-24, 2-25
0084770 2-25
0084771 ..... 2-25, 2-37
0084774 4-30
0084781 2-24
0084782 2-26
0084786 2-24
0084787 2-32
0084788 2-32
0084792 2-24
0084793 2-24
0084794 2-24
0090141 ..... 2-29, 2-30, 2-31, 2-32, 2-33
0090319 ..... 2-16, 4-2, 4-3, 4-4, 4-5, 4-6, 4-7
0090352 3-8
0090483 ..... 5-1, 5-5, 5-6
0090492 5-5
0090493 ..... 5-1, 5-5
0090589E 2-73, 5-32
0090621 ..... 4-18, 4-21, 4-24, 4-27
0090622 ..... 4-34, 4-35, 4-36
0090757 ..... 4-8, 4-12, 4-14, 4-16, 5-35, 5-36, 5-37, 5-39, 5-51
0100105 ..... 2-27, 2-28, 5-52
0100271 5-35
0100277 ..... 3-60, 3-61
0100278 5-44
0100422 ..... 2-29, 2-30, 2-31, 2-32, 2-33, 5-35
0101247 5-35
0101298 ..... 4-38, 4-39, 5-51
0101299 4-39

Courtesy of Crane.Market

0101379 5-52
0101724 5-4
0101896 ..... 5-36, 5-37, 5-39
0110156 3-1
0110171 5-44
0110198 5-37
0110199 ..... 3-60, 3-61
0110227 5-52
0110320 2-4
0110458 4-29
0110465 ..... 3-37, 3-38
0110466 ..... 3-37, 3-38
0110467 ..... 3-37, 3-38
0110468 ..... 4-34, 4-35, 4-36, 4-37, 4-38, 4-39
0110471 ..... 4-18, 4-21, 4-24, 4-27, 4-29
0110483 ..... 2-60, 2-61, 2-63, 2-64, 2-65
0110490 ..... 3-57, 3-58
0110581 ..... 2-23, 2-24, 2-25, 2-26
0110590 2-24
0110603 5-52
0110610 ..... 2-27, 2-28
0110683 ..... 3-11, 3-19
0110771 3-54
0110835 ..... 4-38, 4-39, 5-28, 5-29
0110841 5-52
0110842 5-52
0110918 4-18
0111286 ..... 5-36, 5-37, 5-39
0111287 5-35
0111338 3-22
0111339 3-23
0111340 3-22
0111341 3-23
0111476 ..... 4-3, 5-28, 5-29
0111477 ..... 4-10, 4-11, 4-38, 4-39
0111508 ..... 4-19, 4-20, 4-39
0111735 ..... 4-17, 4-19, 4-20, 4-22, 4-23
0111838 2-49
0111839 2-49
0111862 5-7
0111869 2-49
0111959 2-50
0112083 5-7
0112084 2-49
0112085 2-49
0112086 2-49
0112087 2-49
0112088 2-49
0112092 2-47
0112093 2-47
0112100 ..... 5-5, 5-6, 5-7
0112132 2-73
0112164 ..... 4-21, 4-24, 4-27
0112231 4-28
0112239 ..... 2-60, 2-61, 2-63, 2-64, 2-65
0112559 ..... 4-8, 4-9, 4-10, 4-11, 4-13
0112577 2-51
0112672 5-18
0112795 ..... 2-31, 2-32
0112796 ..... 2-31, 2-32
0112797 ..... 4-38, 4-39
0113519 2-77
0113528 2-77
0113529 2-77
0113530 2-77
0113531 ..... 2-73, 2-77
0113538 2-77
0113540 2-76

Courtesy of Crane.Market

0113541 2-76
0113542 2-76
0113584 2-73
0113592 2-24
0113607 2-24
0113641 2-26
0140288 3-33
0140317 ..... 4-18, 4-21, 4-24, 4-27, 4-29
0140323 ..... 4-21, 4-24, 4-27
0140332 ..... 4-21, 4-24, 4-27
0140366 4-21
0140398 5-1
0140500 3-34
0150121 ..... 5-40, 5-41
0150488 ..... 4-18, 4-21, 4-24, 4-27, 4-29
0150509 ..... 2-66, 2-68, 2-72, 2-73
0150563 ..... 3-12, 3-47
0150606 ..... 4-17, 4-19, 4-22, 4-23
0150647 ..... 4-12, 4-14, 4-16
0150685 ..... 2-29, 2-30, 2-33
0150756 ..... 4-38, 5-28, 5-29
0151205 ..... 4-18, 4-21, 4-24, 4-27, 4-29, 4-39
0151370 ..... 4-3, 4-4, 4-5, 4-6
0151371 ..... 4-4, 4-5
0151372 ..... 4-3, 4-4, 4-5
0151457 5-38
0151458 5-38
0151459 ..... 5-35, 5-36, 5-37, 5-39, 5-51
0151469 5-38
0151470 5-38
0151471 ..... 5-35, 5-36, 5-37, 5-39
0151484 5-38
0151556 ..... 4-39, 5-51
0151583 ..... 5-35, 5-36, 5-37, 5-39
0151786 2-43
0151815 5-5
0151816 ..... 4-34, 4-35, 4-36, 4-37, 4-38, 4-39
0151910 ..... 4-8, 4-9, 4-10, 4-13, 4-34, 4-35, 4-36, 4-37, 4-38, 4-39
0151918 ..... 2-23, 2-24, 2-25
0151920 4-3
0152586 ..... 4-19, 4-20, 4-39
0152831 5-38
0160970 2-71
016117728 ..... 2-69, 2-70
0161182 ..... 2-69, 2-70
0161184 ..... 2-69, 2-70
0161487 ..... 2-69, 2-70
0161665 2-71
0161766 ..... 2-24, 5-40
016181905 4-39
0162698 2-45
0162758 ..... 2-60, 2-61, 2-62, 2-63, 2-64, 2-65
0163184 4-4
0163234 ..... 5-21, 5-32
0163367 2-52
0163407 ..... 5-10, 5-11
0170045 2-24
0170335 ..... 4-18, 4-21, 4-24, 4-27, 4-29
0170372 ..... 4-36, 4-37
0170623 4-28
0172213 ..... 2-36, 2-37
0172214 ..... 2-36, 2-37
0172216 ..... 2-36, 2-37
0172223 2-17
0172236 ..... 4-38, 4-39
0172237 ..... 4-38, 4-39
0172238 ..... 4-38, 4-39

Courtesy of Crane.Market

0172240 ..... 4-38, 4-39
0172299 3-61
0172307 2-36
0172373 2-53
0172374 2-53
0172395 2-52
01800768 2-75
0180110 4-29
0180441 ..... 2-47, 2-48
0180509 2-75
0180516 2-75
0180521 2-35
0180596 2-35
0180597 2-35
0180606 2-35
0180612 ..... 2-29, 2-30, 2-33
0180635 2-35
0180640 2-35
0180796 ..... 4-18, 4-21, 4-24, 4-27, 4-29
0180802 3-14
0180832 ..... 2-47, 2-48
0180842 .. 4-34, 4-35, 4-36, 4-37, 4-38, 4-39
0180846 .. 4-34, 4-35, 4-36, 4-37, 4-38, 4-39
0180850 .. 4-34, 4-35, 4-36, 4-37, 4-38, 4-39
0180873 ..... 2-35, 2-75
0180886 .. 4-34, 4-35, 4-36, 4-37, 4-38, 4-39
0180887 .. 4-34, 4-35, 4-36, 4-37, 4-38, 4-39
0180888 .. 4-34, 4-35, 4-36, 4-37, 4-38, 4-39
0180901 ..... 2-30, 2-33
0180906 2-35
0180941 2-35
0180949 .. 4-12, 4-14, 4-16, 4-34, 4-35, 4-36
0181026 4-3
0181028 . 4-17, 4-19, 4-20, 4-22, 4-23, 4-28, 4-34, 4-35, 4-36, 4-37, 4-38, 4-39
0181029 ..... 4-34, 4-35, 4-36, 4-37, 4-38, 4-39
0181030 .. 4-18, 4-29, 4-34, 4-35, 4-36, 4-37, 4-38, 4-39
0181031 .. 4-18, 4-21, 4-24, 4-27, 4-28, 4-29, 4-34, 4-35, 4-36, 4-37
0181073 4-29
0181074 ..... 4-34, 4-35, 4-36, 4-37, 4-38, 4-39
0181102 ..... 5-28, 5-29
0181103 ..... 5-28, 5-29
0181104 .. 4-8, 4-9, 4-10, 4-11, 4-12, 4-13, 4-14, 4-16
0181106 ..... 4-18, 4-21, 4-24, 4-27, 4-29
0181107 ..... 4-18, 4-21, 4-24, 4-27, 4-29
0181110 ..... 4-18, 4-21, 4-24, 4-27
0181111 ..... 4-18, 4-21, 4-24, 4-27, 4-29
0181113 ..... 4-18, 4-21, 4-24, 4-27, 4-29
0181126 2-35
0181136 ..... 4-21, 4-24, 4-27, 4-29
0181154 2-47
0181159 5-23
0181163 ..... 5-36, 5-37, 5-39
0181187 ..... 5-35, 5-36, 5-37, 5-39, 5-51
0181221 ..... 2-29, 2-30, 2-33, 2-35
0181263 2-35
0181264 ..... 2-29, 2-30, 2-33
0181270 5-52
0181276 5-27
0181285 5-13
0181376 ..... 5-17, 5-18, 5-22
0181377 ..... 5-28, 5-29
0181381 ..... 5-28, 5-29
0181382 ..... 5-28, 5-29
0181389 ..... 5-28, 5-29

Courtesy of Crane.Market

0181398 5-13
0181406 ..... 5-28, 5-29
0181407 ..... 5-28, 5-29
0181408 ..... 5-28, 5-29
0181449 ..... 3-14, 3-16
0181453 2-49
0181480 5-29
0181503 ..... 2-16, 4-2, 4-3, 4-4, 4-5, 4-6, 4-7
0181534 2-49
0181535 2-49
0181552 ..... 4-21, 4-24, 4-27, 4-29
0181553 ..... 4-18, 4-21, 4-29
0181554 ..... 4-18, 4-21, 4-24, 4-27, 4-29
0181562 2-65
0181634 5-12
0181654 ..... 4-34, 4-36, 4-37
0181655 ..... 4-34, 4-36, 4-37
0181914 3-51
0182043 2-55
0182061 ..... 4-38, 4-39
0182066 4-39
0182138 5-31
0182139 5-31
0182140 5-31
0182147 5-31
0182149 5-31
0182150 5-31
0182187 ..... 4-24, 4-27
0182202 ..... 4-8, 4-9, 4-10, 4-11, 4-13
0182340 5-29
0190086 ..... 5-11, 5-12
0191324 2-35
0191811 ..... 3-46, 3-47
0192170 2-52
0192172 2-52
0192173 2-52
0192182 2-52
0192192 2-52
0192289 ..... 2-16, 4-7
0192295 4-2
020451-013 2-56
0240483 ..... 4-11, 4-12, 4-14, 4-16, 4-17, 4-19, 4-20, 4-22, 4-23, 4-28, 4-34, 4-35, 4-36, 4-37, 4-38
0260466 2-56
0260856 2-56
0322724 2-71
0360891 5-31
0360892 5-31
0400483 ..... 3-57, 3-58
0400497 ..... 3-60, 3-61, 5-44
0420111 ..... 2-36, 2-37
0420113 2-74
0420114 ..... 2-36, 2-37, 2-74
0420124 2-36
0420132 ..... 2-36, 2-37
0420198 2-72
0420199 ..... 2-72, 2-73
0420632 ..... 2-72, 2-73
0420731 ..... 2-36, 2-37
0420732 ..... 2-36, 2-37
0420878 ..... 2-36, 2-37
0421066 5-34
0421067 ..... 5-33, 5-34
0421077 5-34
0421078 5-34
0421079 5-34
0421269 5-33
0421283 5-33

Courtesy of Crane.Market

0421285 5-33
0421299 5-33
0421321 ..... 2-72, 2-73
0421519 ..... 2-71, 2-72, 2-73
0421529 ..... 2-71, 2-72, 2-73
0421711 2-37
0421796 2-56
0421810 5-34
0421811 ..... 5-33, 5-34
0421841 4-39
056021-006 ..... 2-46, 2-56, 4-39
056021-008 ..... 2-43, 2-44, 2-46, 2-56
056021-010 . 2-38, 2-40, 2-41, 2-42, 2-44, 2-46, 2-56
056021-012 ..... 2-37, 2-56
056021-014 2-46
056058-018 ..... 2-38, 2-42, 2-46, 2-56
056058-070 2-77
056059-016 2-46
056059-025 2-56
056060-030 2-56
056060-065 2-56
056064-010 ..... 2-40, 2-41
056064-024 ..... 2-36, 2-37
056065-030 2-41
056066-006 ..... 2-56, 2-77
056066-008 2-56
056066-010 2-56
056067-006 2-44
056069-006 2-56
056069-008 2-46
056069-010 ..... 2-38, 2-40, 2-41, 2-42, 2-46
056069-012 2-56
058491-020 2-46
058492-020 2-46
058493-020 ..... 2-38, 2-42
058493-025 ..... 2-38, 2-40, 2-41
058493-030 ..... 2-40, 2-41, 2-44, 2-46
058494-035 2-37
058508-025 2-36
058509-030 2-37
067614-023 2-56
068903-009 2-59
073668 4-37
1 . 5-2, 5-2, 5-2, 5-2, 5-2, 5-2, 5-2, 5-2, 5-2, 5-2, 5-2, 5-2, 5-2, 5-2, 5-2, 5-2
10 5-2
100180-041 2-56
100209-000 2-56
102271-082 2-73
104673-105 2-56
104673-113 2-56
104701-000 2-56
104703-000 2-56
104737-000 2-56
104744-000 2-56
104754-000 2-56
104803-000 2-56
104869-000 5-12
104883-000 2-56
106960-001 2-56
110581 2-22
116346-000 2-37
116347-000 4-39
12 ..... 5-2, 5-2, 5-2, 5-2, 5-2
1430080 2-73
1430099 2-73
1430312 2-37

Courtesy of Crane.Market

1430527 2-56
1430688 5-30
1430689 5-30
1430690 5-30
2 ..... 5-2, 5-2, 5-2, 5-2, 5-2
20082046 4-3
2500026 3-51
2500035 2-35
2500038 2-75
2500039 2-35
2500046 ..... 2-29, 2-30, 2-31, 2-32, 2-33
2500047 ..... 2-29, 2-30, 2-31, 2-32, 2-33, 2-34
2500051 2-74
2502032 2-75
2502229 ..... 3-47, 3-48
2502416 ..... 2-3, 3-39, 5-24
2502432 ..... 2-4, 2-34
2503220 ..... 2-14, 2-15
2503224 ..... 2-4, 2-5
2503628 ..... 3-41, 3-42
2504856 2-75
2509677 2-74
2540005 2-5
2540006 2-5
2560005 ..... 2-4, 2-5
2560006 ..... 2-4, 2-5
2572007 ..... 2-71, 2-72, 2-73
2580001 ..... 2-3, 2-4, 2-14, 2-15
2650001 ..... 2-46, 2-56
2660002 ..... 4-40, 4-41
2667500 ..... 2-71, 2-72, 2-73
2690001 ..... 2-3, 2-4, 2-5, 5-24
2690004 ..... 2-41, 2-46, 2-56
280024 2-5
28220008 3-3
28220030 ..... 3-2, 3-3
3 5-2
300489 ..... 4-9, 4-12, 4-13, 4-14
300492 ..... 2-71, 2-72, 2-73
300541 ..... 2-36, 2-37
300542 ..... 2-36, 2-37
300804 4-8
3010005 ..... 2-26, 2-27, 2-28, 5-52
3010006 ..... 2-26, 2-27, 2-28, 5-52
3010009 ..... 2-26, 2-27, 2-28, 5-52
3011001 5-9
3011005 5-52
3011601 ..... 5-9, 5-17, 5-18, 5-19, 5-20
3011801 ..... 5-35, 5-36, 5-37, 5-39
3011803 ..... 5-28, 5-28, 5-29, 5-29
3014710 ..... 4-2, 4-5
3014753 2-77
3020013 ..... 4-8, 4-9, 4-10, 4-11, 4-12, 4-13, 4-14, 4-16, 4-34, 4-35, 4-36, 4-37, 4-38, 4-39, 5-1, 5-5, 5-13, 5-17, 5-18, 5-22
3020015 4-8
3020016 ..... 4-8, 4-9, 4-10, 4-11, 4-12, 4-13, 4-14, 4-16
3020018 ..... 4-8, 4-9, 4-10, 4-11, 4-12, 4-13, 4-14, 4-16, 4-34, 4-35, 4-36, 4-37, 4-38, 4-39
3020019 4-1
3020020 ..... 4-8, 4-9, 4-10, 4-11, 4-13, 4-34, 4-35, 4-36, 4-37, 4-38, 4-39
3020021 4-33
3020033 ..... 4-40, 4-41
3020037 4-33
3020038 4-33
3020040 ..... 4-2, 4-3, 4-4, 4-5, 4-6

Courtesy of Crane.Market

3020048 . 4-8, 4-9, 4-10, 4-12, 4-13, 4-14, 4-16, 5-35, 5-36, 5-37, 5-39, 5-51
3020049 . . . . . 4-2, 4-3, 4-5, 4-6
3020052 4-1
3020054 5-7
3020078 5-13
3020080 . 2-76, 4-8, 4-9, 4-10, 4-11, 4-13, 4-34, 4-35, 4-36, 4-37, 4-38, 4-39, 5-9, 5-28, 5-29
3020081 . . . . . 2-47, 4-11, 4-12, 4-14, 4-16
3020087 . 4-8, 4-9, 4-10, 4-12, 4-13, 4-14, 4-16
3020090 . . 4-34, 4-35, 4-36, 4-37, 4-38, 4-39
3020095 . . . . . 2-39, 2-40, 2-41, 2-49, 4-6
3020097 4-39
3020098 . . . . . 5-28, 5-29
3020109 . . . . . 4-3, 4-4, 4-5, 4-6
302363 . . . . . 2-29, 2-30, 2-31, 2-32, 2-33
302544 . . . . . 5-33, 5-34, 5-40, 5-41
302555 . . . . . 2-71, 2-72, 2-73
3026027 . . . . . 4-11, 5-9, 5-25
302631 2-60
3028812 2-56
3028814 4-11
3028832 4-11
3028844 2-77
3030122 . . . . . 4-2, 4-3, 4-4, 4-5
3040009 . . . . . 5-17, 5-18
3040031 . . . . . 4-19, 4-20, 4-34, 4-35, 4-36
3040038 . . . . . 5-17, 5-18, 5-20, 5-22
3040039 . . . . . 5-17, 5-18, 5-20, 5-22
3040046 2-16, 4-2, 4-3, 4-4, 4-5, 4-5, 4-6, 4-6, 4-7, 4-34, 4-35, 4-36, 4-37, 4-38, 4-39, 5-16, 5-19, 5-35, 5-36, 5-37, 5-39, 5-50
3040047 . 4-6, 4-20, 4-25, 4-26, 4-30, 4-31, 4-32, 5-13, 5-13, 5-35, 5-36, 5-37, 5-39, 5-50
3040057 . . . . . 4-34, 4-35, 4-36, 4-37, 4-38, 4-39
3040064 . . . . . 4-39, 5-35, 5-36, 5-37, 5-39
3040065 . . . . . 4-19, 4-20, 4-39
3040068 . . . . . 4-34, 4-35, 4-36, 4-37, 4-38, 4-39
3040069 . . . . . 4-17, 4-19, 4-20, 4-22, 4-23, 4-28
3040070 . 4-1, 4-17, 4-19, 4-20, 4-22, 4-23, 4-28, 4-38, 4-39, 5-29
3040072 . . . . . 4-40, 4-41
3040073 . . . . . 4-40, 4-41
3040082 . 2-16, 4-2, 4-3, 4-4, 4-5, 4-6, 4-7, 4-20, 4-38, 4-39, 5-15, 5-16, 5-17, 5-18, 5-20
3040083 . 2-76, 4-20, 4-39, 5-7, 5-17, 5-18, 5-19, 5-20
3040086 . . . . . 4-40, 4-41
3040108 4-29
3040110 . . 4-17, 4-19, 4-20, 4-22, 4-23, 4-28, 4-33, 4-34, 4-35, 4-36, 4-37, 4-38, 4-39, 4-42, 5-28, 5-29, 5-48
3040113 . . . . . 5-17, 5-18
3040114 5-20
3040115 . . . . . 4-28, 5-28
3040116 . . 4-17, 4-22, 4-23, 4-28, 4-33, 4-34, 4-35, 4-36, 4-37, 4-38, 4-39, 4-42, 5-48
3040118 . . . . . 4-17, 4-19, 4-22, 4-23, 4-28
3040121 . . . . . 4-17, 4-19, 4-22, 4-23, 4-28
3040127 5-25
3040128 5-25
3040129 . . . . . 5-15, 5-16
3040146 . . . . . 4-40, 4-41
3040161 5-9
3040169 . . . . . 4-40, 4-41
3040174 . . . . . 2-41, 2-46, 2-56

Courtesy of Crane.Market

3040187 . . . 4-1, 4-17, 4-19, 4-20, 4-22, 4-23, 4-28, 4-38, 4-39, 5-28, 5-29
3040188 . 4-21, 4-34, 4-35, 4-36, 4-37, 4-38, 4-39
3040194 4-34
3040252 . . 4-19, 4-20, 4-22, 4-23, 4-28, 4-42
3040268 2-16, 4-2, 4-3, 4-4, 4-5, 4-6, 4-7, 5-9
3040269 . . . . 2-16, 4-2, 4-3, 4-4, 4-5, 4-6, 4-7
3040270 . . . . 2-16, 4-2, 4-3, 4-4, 4-5, 4-6, 4-7
3040271 . . . . . 4-40, 4-41
3040285 . 4-17, 4-19, 4-20, 4-22, 4-23, 4-28, 4-34, 4-35, 4-36, 4-37, 4-38, 4-39
3040287 . . . . . 4-24, 4-27
3040295 . 4-17, 4-19, 4-20, 4-22, 4-23, 4-28, 4-34, 4-35, 4-36, 4-37, 4-38, 4-39, 5-48
3040298 . . 4-17, 4-19, 4-20, 4-22, 4-23, 4-28
3040301 . . . . . 4-17, 4-37, 4-39
3040348 . 4-8, 4-9, 4-10, 4-11, 4-12, 4-13, 4-14, 4-16, 4-34, 4-35, 4-36, 4-37, 4-38, 4-39
3040386 . . 4-17, 4-19, 4-20, 4-22, 4-23, 4-28
3040387 . . 4-17, 4-19, 4-20, 4-22, 4-23, 4-28
3040392 . . . . . 4-40, 4-41
3040397 4-42
3040411 . 4-17, 4-19, 4-20, 4-22, 4-23, 4-28, 4-34, 4-35, 4-36, 4-37, 4-38, 4-39
3040433 . 4-18, 4-21, 4-24, 4-27, 4-29, 4-34, 4-35, 4-36, 4-37, 4-38, 4-39
3040452 . . 2-16, 4-2, 4-3, 4-4, 4-5, 4-7, 5-35, 5-36, 5-37, 5-39
3040457 3-24
3040462 5-16
3040469 . 2-16, 2-76, 4-2, 4-7, 4-17, 4-18, 4-19, 4-20, 4-21, 4-22, 4-23, 4-24, 4-27, 4-28, 4-29, 4-34, 4-35, 4-38, 4-39, 5-17, 5-18, 5-29
3040473 . . . . . 3-27, 3-36
3040492 . . . . . 4-34, 4-35, 4-36, 4-37, 4-38, 4-39
3040493 . . . . . 4-34, 4-35, 4-36, 4-37, 4-38, 4-39
3040496 3-14
3040497 . . . . . 4-12, 4-14, 4-16, 4-34
3040502 . . . . . 2-41, 5-28
3040506 . . . . . 4-2, 4-3, 4-4, 4-5, 4-6, 5-9
3040534 4-2
3040535 . . 4-8, 4-9, 4-10, 4-11, 4-12, 4-13, 4-14, 4-16, 4-34, 4-35, 4-36, 4-37, 4-38, 4-39
3040551 . . . . . 3-15, 3-15, 3-15, 3-15
3040619 . . . . . 4-12, 4-14, 4-16
3040620 . . 4-8, 4-9, 4-10, 4-11, 4-12, 4-13, 4-14, 4-16
3040624 4-42
3040625 4-42
3040691 4-42
3040771 5-49
3040772 5-49
3040775 5-48
3040776 5-48
3040782 3-17
3041641 2-41
3042263 5-9
3044070 . . . . . 4-26, 4-30, 5-3, 5-4
3044071 . . . . . 5-17, 5-18
3044072 . . . . . 4-26, 4-30, 4-42
3044142 . 4-25, 4-26, 4-30, 4-31, 4-32, 5-9, 5-13, 5-50
3044145 2-49
3044146 . . 4-3, 4-4, 4-5, 4-6, 4-20, 4-25, 4-26, 4-26, 4-30, 4-30, 4-31, 4-32, 4-39, 5-19, 5-35, 5-36, 5-37, 5-39, 5-50

Courtesy of Crane.Market

3044158 . 5-17, 5-18, 5-22, 5-35, 5-36, 5-37, 5-39
3044161 . 2-76, 4-3, 4-4, 4-34, 4-35, 4-36, 4-37, 4-38, 4-39, 5-17, 5-18, 5-20, 5-22
3044162 2-16, 4-2, 4-3, 4-4, 4-5, 4-6, 4-7, 5-15, 5-16
3044704 5-48
3044710 . . 4-34, 4-35, 4-36, 4-37, 4-38, 4-39
3044712 . . . . . 4-18, 4-21, 4-24, 4-27, 4-29
3044836 4-42
3044854 . 4-2, 4-5, 4-25, 4-26, 4-30, 4-31, 4-32, 4-39, 4-42, 5-49, 5-50
3045254 5-51
3045255 5-42
3045278 . . . . . 4-17, 4-19, 4-22, 4-28
3046697 . . . . . 4-39, 5-15
3046972 . 4-3, 4-4, 4-5, 4-6, 4-25, 4-26, 4-30, 4-31, 4-32, 5-50
3049953 . . . . . 4-2, 4-5
3050002 . . . . . 4-2, 4-6, 5-12
3050004 2-16, 4-2, 4-3, 4-4, 4-5, 4-6, 4-7, 5-12
3050008 . . . . . 4-2, 4-3, 4-4, 4-5, 4-6, 5-12
3050102 . . . . . 5-11, 5-12, 5-12
3060008 5-22
3060017 . . . . . 5-17, 5-18
3060018 . . . . . 5-17, 5-18
3060019 . . . . . 5-17, 5-18
3060083 5-19
3060084 5-19
3064413 5-20
3064414 5-17
3067619 5-18
3067620 5-20
3069524 . . . . . 4-11, 4-39, 5-21, 5-32
3069528 5-20
3070001 . . . . . 4-17, 4-19, 4-20, 4-22, 4-23, 4-28
3070003 . . . . . 4-9, 4-12, 4-13, 4-14, 4-16
3070021 4-16
3070037 . . . . . 2-39, 2-40, 2-41
3070039 . . . . . 4-3, 4-4, 4-5
3070040 . . . . . 4-8, 4-12
3070041 . . . . . 4-14, 4-15
3072126 4-8
3080001 5-38
3087786 5-45
3087797 5-46
3090006 . . . . . 5-9, 5-17, 5-18, 5-19
3090019 . . . . . 5-20, 5-35, 5-36, 5-37, 5-39
3220006 5-42
3220073 . . . . . 4-40, 4-41
3220096 . . . . . 4-20, 4-39
3220126 3-17
3220164 . . . . . 4-3, 4-4, 4-5, 4-6
322017028 . . . . . 4-3, 4-4, 4-5, 4-6
345278 4-23
4 5-2
469396 4-17
475986 5-51
480652 . 4-2, 4-3, 4-4, 4-5, 4-6, 4-34, 4-35, 4-36, 4-37, 4-38, 4-39
5010005 . . . . . 2-38, 2-38, 2-42
5010006 2-48
5010007 . . . . . 2-72, 2-73, 5-3, 5-7
5010011 . . 2-18, 2-19, 2-43, 2-47, 2-48, 2-54, 2-56, 5-1, 5-4
5010012 . . . . . 2-47, 2-48
5010020 . . . . . 2-48, 2-50, 2-51, 5-7

Courtesy of Crane.Market

5010024 5-52
5010027 2-38
5018829 2-48
5018831 5-1
5025001 ..... 3-22, 3-23, 5-47
5025002 3-1
5025003 5-47
5033604 ..... 2-6, 2-8, 2-43, 5-47
5033608 5-46
5033614 3-1
5033618 ..... 3-22, 3-23
5033621 3-1
5033703 ..... 2-1, 2-6, 2-8
5033704 ..... 2-1, 2-6, 2-8
5033713 3-1
5034403 2-29
5034501 ..... 2-31, 2-32, 3-59, 3-61
5034502 ..... 2-30, 2-33, 3-58
5034505 3-58
5035303 . 2-10, 2-11, 2-12, 2-13, 2-74, 2-75, 3-8, 3-14, 3-16, 3-22, 3-23, 3-34
5035305 ... 2-15, 3-1, 3-37, 3-40, 3-46, 3-56
5035306 .. 3-24, 5-24, 5-36, 5-37, 5-38, 5-39
5035308 ... 2-10, 2-11, 2-12, 2-13, 2-15, 3-6, 3-7, 3-22, 3-23, 3-31, 3-32, 3-33, 3-34, 3-37, 5-45, 5-46
5035310 3-25
5035311 3-9
5035315 2-34
5035316 3-37
5035318 ... 2-75, 3-1, 3-25, 3-27, 3-30, 3-35, 3-37, 3-52, 5-14, 5-47
5035319 3-11
5035320 ..... 3-24, 5-38
5035322 ..... 3-1, 3-22, 3-23
5035403 ..... 3-59, 3-61
5035705 3-16
5035708 5-47
5036103 ..... 2-75, 3-32, 3-33
5036105 3-16
5036108 ..... 3-22, 3-23, 3-32, 3-33, 3-34
5036503 3-55
5036505 ..... 3-25, 5-35, 5-36, 5-37, 5-39
5036703 ..... 3-11, 3-14, 5-13, 5-44
5036705 ..... 3-16, 3-19, 3-20, 3-58, 5-24
5036706 ... 3-23, 5-24, 5-35, 5-36, 5-37, 5-39, 5-44
5036708 ..... 3-22, 3-23, 3-28, 3-32, 3-34
5036710 5-44
5036803 ..... 3-22, 3-23
5036806 ..... 3-19, 3-20
5036810 5-44
5036903 ..... 2-6, 2-8, 3-14, 3-16
5036905 .... 2-29, 2-30, 2-33, 3-8, 3-14, 3-16, 5-46
5036906 ..... 3-1, 3-22, 3-55
5036907 3-25
5036908 .... 3-9, 3-31, 3-32, 3-33, 3-34, 5-45, 5-46
5037003 .. 2-10, 2-11, 2-12, 2-13, 3-1, 3-6, 3-7, 3-8, 3-9, 3-14, 3-16, 3-18, 3-23, 3-24, 3-27, 3-30, 3-33, 3-35, 3-59, 3-61, 5-13, 5-14, 5-44
5037005 .. 2-4, 2-10, 2-11, 2-12, 2-13, 3-6, 3-7, 3-9, 3-14, 3-16, 3-19, 3-20, 3-25, 3-31, 3-32, 3-33, 3-58, 5-24, 5-47
5037006 ... 3-19, 3-20, 3-55, 3-56, 5-24, 5-37, 5-45
5037007 ..... 3-14, 3-16
5037008 .. 3-11, 3-22, 3-23, 3-28, 3-31, 3-32, 3-33, 3-34, 5-44
5037010 ..... 3-1, 3-9, 3-55
5037102 ..... 2-6, 2-8

Courtesy of Crane.Market

5038005 3-55
5039501 5-7
5039601 5-7
505087-010 2-37
5058824 ..... 3-59, 3-61
5063701 ..... 2-75, 3-14
5063905 ..... 5-35, 5-36, 5-37, 5-39
5063906 .. 3-18, 3-19, 3-20, 3-22, 3-23, 5-44
5063908 . 3-6, 3-7, 3-22, 3-23, 3-31, 3-32, 5-47
5063910 5-44
5064001 ..... 5-35, 5-36, 5-37, 5-39
5064002 ..... 3-18, 3-22, 3-23
5064003 ..... 3-19, 3-20, 5-44
5064007 ..... 3-6, 3-7, 5-47
5064008 ..... 3-22, 3-23, 3-31, 3-32
5064009 5-44
5064011 ..... 3-22, 3-23
5065703 .3-6, 3-7, 3-8, 3-9, 3-11, 3-14, 3-16, 3-22, 3-23, 3-31
5065705 ... 2-36, 2-37, 3-1, 3-14, 3-16, 3-27, 3-30, 3-35, 3-37, 5-14, 5-44, 5-47
5065707 ... 2-4, 2-10, 2-11, 2-12, 2-13, 2-17, 3-16, 3-37, 3-40, 5-47
5065708 ..... 3-9, 5-24
5065709 ..... 3-1, 3-56
5065710 ..... 3-19, 3-20, 3-55
5065711 ..... 3-18, 3-22, 3-23, 5-45
5065714 . 2-15, 3-6, 3-7, 3-22, 3-23, 3-29, 3-31, 3-32, 3-33, 3-34, 3-37, 5-47
5065715 ..... 3-11, 5-47
5065718 ..... 3-1, 3-55
5065719 3-9
5065726 3-8
5065728 3-37
5065729 3-25
5065731 ..... 3-9, 3-22, 3-23, 3-28
5065803 3-24
5065805 ..... 3-14, 5-44
5065807 ..... 3-14, 3-16
5065815 ..... 3-9, 3-14, 3-16
5070005 ..... 3-16, 3-60, 3-61, 5-47
5070010 3-16
5070026 ..... 2-4, 2-15
5070027 3-16
5070028 3-16
5074401 ..... 2-6, 2-8, 2-31, 2-32, 3-59, 3-61
5074403 ..... 2-29, 2-30, 2-33
5075203 ..... 3-7, 3-25
5075205 ..... 3-1, 3-14, 3-16, 3-37
5075208 ..... 3-6, 3-7, 3-9, 3-22, 3-23
5075306 ..... 3-42, 3-47
5076206 ..... 3-22, 3-23
5076301 ..... 3-30, 5-14
5080003 3-1
5080004 3-1
5080007 3-1
5080008 3-1
5080009 3-1
5080011 3-1
5080015 ..... 2-10, 2-11, 3-57, 3-58
5089682 2-56
5090007 3-1
5090008 2-20
5090024 5-7
5090026 ..... 2-48, 5-7
5090032 ..... 2-18, 2-19, 2-43, 2-47, 2-48, 5-1
5090034 ..... 2-22, 2-23, 2-24, 2-25, 5-53

Courtesy of Crane.Market

5090044 5-7
5090049 ..... 5-1, 5-4
5090302 2-50
5090305 5-19
5093000 . 2-39, 2-40, 2-41, 2-51, 4-3, 4-4, 4-5, 4-28
5093001 . 2-54, 4-17, 4-19, 4-20, 4-22, 4-23, 5-28, 5-29
5093002 ... 2-16, 2-39, 2-40, 2-41, 2-43, 4-2, 4-3, 4-4, 4-5, 4-7, 5-3, 5-5, 5-17, 5-18
5093004 . 2-22, 2-47, 2-48, 2-66, 4-3, 4-4, 4-5, 4-6, 4-25, 4-26, 4-30, 4-31, 4-32, 5-1, 5-1, 5-4, 5-6, 5-50, 5-53
5093006 .. 2-43, 2-49, 4-6, 4-8, 4-9, 4-10, 4-11, 4-12, 4-13, 4-14, 4-16, 5-27
5093008 . 2-16, 2-47, 2-48, 4-2, 4-3, 4-4, 4-5, 4-6, 4-7, 5-35, 5-44
5093009 ..... 2-23, 2-25
5093010 ..... 2-22, 2-24, 5-53
5093012 ..... 2-47, 2-48, 2-52, 5-27, 5-52
5093013 5-44
5093014 ..... 3-59, 3-61
5093019 5-20
5093021 ..... 2-39, 2-40, 2-41
5093024 ..... 2-16, 2-39, 2-40, 2-41, 4-2, 4-7
5093027 ..... 2-35, 2-66, 5-1
5093037 ..... 2-18, 2-19, 2-47, 2-48
5093044 2-38
5098335 2-48
5098336 2-48
5098341 5-3
510581-030 ..... 2-40, 2-41
510587-025 2-56
510682-280 2-37
512649-280 2-36
513133-040 2-56
514411-000 3-13
5240002 5-27
5260012 5-27
5260013 ..... 5-27, 5-44
5510022 ..... 2-60, 2-61, 2-62, 2-63, 2-64, 2-65
5516329 ..... 5-40, 5-41
5530007 2-30
5530013 ..... 5-28, 5-29
5530017 ..... 2-39, 2-40
55500030 2-47
5550005 2-56
5550006 ..... 2-38, 2-42
5550007 ..... 2-56, 2-58
5550010 ..... 2-48, 5-7, 5-44
5550014 ..... 2-49, 5-8
5550020 ..... 2-48, 5-23, 5-27
5550021 5-27
5550026 ..... 2-38, 2-42, 2-53
5550028 ..... 2-38, 2-43, 2-47, 2-48, 2-56, 5-1, 5-4
5550030 ..... 2-48, 2-52, 5-7
5550038 ..... 2-38, 2-42, 2-52
5550040 ..... 2-38, 2-42, 2-50, 2-51, 5-23
5550050 ..... 2-50, 2-55, 2-58, 5-23
5550105 5-23
5554373 2-53
5560004 .. 2-16, 2-22, 2-23, 2-39, 2-40, 2-41, 2-46, 2-48, 2-51, 2-52, 2-54, 2-60, 2-64, 2-65, 2-66, 3-5, 3-30, 3-58, 4-3, 4-6, 4-7, 4-9, 4-10, 4-11, 4-12, 4-13, 4-14, 4-16, 4-19, 4-20, 4-22, 4-28, 4-34, 4-39, 5-14, 5-28, 5-29, 5-40, 5-41, 5-44, 5-49, 5-52, 5-53
5560005 ..... 2-29, 2-30, 2-31, 2-32, 2-33, 2-34
5560014 ..... 2-22, 2-23

Courtesy of Crane.Market

5560015 ..... 2-29, 2-30, 2-35
5560018 ..... 2-14, 2-15
5560022 2-17
5560025 ..... 2-4, 2-5, 4-36
5560026 ..... 2-4, 2-5
5560028 2-44
5560031 . 2-16, 2-24, 2-29, 2-31, 2-32, 2-33, 2-51, 2-53, 2-55, 2-60, 2-62, 2-64, 2-65, 2-71, 2-72, 2-73, 3-5, 4-7, 5-5, 5-6, 5-12, 5-30, 5-36, 5-37, 5-38, 5-39, 5-40, 5-41, 5-44, 5-47, 5-52
5560033 . 2-16, 2-18, 2-19, 2-22, 2-23, 2-24, 2-25, 2-27, 2-28, 2-29, 2-31, 2-32, 2-33, 2-34, 2-36, 2-37, 2-38, 2-39, 2-40, 2-41, 2-42, 2-48, 2-51, 2-52, 2-54, 2-58, 2-60, 2-61, 2-62, 2-63, 2-64, 2-65, 2-66, 2-72, 2-73, 3-5, 3-59, 3-61, 4-3, 4-6, 4-7, 5-6, 5-31, 5-38, 5-40, 5-44, 5-47, 5-52, 5-53
5560034 . 2-31, 2-32, 2-33, 2-51, 2-60, 2-61, 2-63, 2-64, 2-65, 2-76, 4-3, 4-6, 4-9, 4-10, 4-11, 4-12, 4-13, 4-14, 4-18, 4-19, 4-20, 4-21, 4-22, 4-24, 4-27, 4-28, 4-29, 4-34, 4-36, 4-37, 4-38, 4-39, 5-17, 5-18, 5-22, 5-28, 5-29, 5-33, 5-34, 5-40, 5-41, 5-48, 5-49
5560036 ..... 2-1, 2-48, 2-52
5560038 . 4-21, 4-24, 4-27, 4-29, 4-34, 4-36, 4-37, 4-38, 4-39
5560039 ... 2-4, 2-14, 2-16, 2-22, 2-23, 2-24, 2-25, 2-27, 2-28, 2-34, 2-38, 2-42, 2-43, 2-48, 2-52, 2-66, 2-67, 2-68, 2-69, 2-70, 3-38, 4-7, 5-24, 5-35, 5-36, 5-37, 5-39, 5-44, 5-52
5560051 2-17
5560052 2-1
5560053 ..... 2-29, 2-30, 2-31, 2-32, 2-33
5560056 2-71
5560063 ..... 2-1, 2-6, 2-8
5560078 .... 2-2, 2-10, 2-11, 2-12, 2-13, 2-14, 2-15
5560080 ..... 2-60, 2-61, 2-62, 2-63, 2-64, 2-65
5560083 ..... 2-60, 2-61, 2-62, 2-63, 2-64, 2-65
5560086 ..... 2-48, 2-61, 2-63, 2-64, 2-65
5560087 3-8
5560089 ..... 2-14, 2-15, 2-60
5560091 2-14
5560104 5-34
5560126 .. 2-26, 2-27, 2-28, 2-29, 2-30, 2-31, 2-32, 2-33, 2-35
5560131 . 2-2, 2-10, 2-11, 2-12, 2-13, 2-14, 2-15, 2-43
5560136 ... 2-38, 2-42, 2-44, 2-45, 2-46, 2-49, 2-53
5560138 ..... 2-52, 2-53
5560149 2-1
5560168 .. 2-16, 2-34, 2-43, 2-44, 2-46, 2-49, 2-53, 4-7
5560169 .. 2-1, 2-2, 2-6, 2-8, 2-12, 2-13, 2-14, 2-15, 2-43, 2-47, 2-48, 2-52
5560170 2-17
5560171 2-17
5560179 ..... 2-47, 2-48, 2-54
5560193 2-17
5560202 2-4
5560204 ..... 2-6, 2-8
5560207 ..... 2-44, 2-45, 2-46
5560213 2-35
5560215 ..... 2-4, 2-7
5560222 2-36
5560228 ..... 2-45, 2-46
5560244 ..... 2-31, 2-32, 2-33
5560252 ..... 2-3, 2-15

Courtesy of Crane.Market

5560256 2-34
5560257 ..... 2-29, 2-30, 2-31, 2-32, 2-33
5560264 ..... 4-36, 4-37, 4-38
5560277 ..... 3-58, 3-61, 5-36, 5-37, 5-39
5560311 ..... 2-60, 2-62
5560330 ..... 5-28, 5-52
5560331 ..... 2-34, 2-64, 2-65, 5-52
5560341 ..... 4-34, 4-37, 4-38, 4-39
5560355 5-8
5560356 ..... 2-39, 2-41, 2-51, 2-53, 5-8
5560357 2-53
5560364 ..... 2-39, 2-41, 2-45, 2-51, 2-53
5560372 ..... 5-40, 5-41
5560377 2-44
5560383 ..... 5-29, 5-50
5560400 2-53
5560531 ..... 2-48, 2-62, 2-64, 2-65
5560598 ..... 2-39, 2-40, 2-41
5560603 ..... 2-31, 2-32
5560605 ..... 2-27, 2-28, 2-28
5560606 2-27
5560609 . 2-20, 2-41, 2-76, 4-18, 4-21, 4-24, 4-27, 4-29, 4-34, 4-36, 4-37, 4-38, 5-33
556061 2-4
5560614 ..... 2-39, 2-40
5560615 ..... 2-39, 2-40
5560618 ..... 2-39, 2-40
5560625 ..... 2-51, 2-53, 5-8
5560626 2-39
5560628 2-44
5560631 2-39
5560638 ..... 2-43, 2-44
5560639 ..... 2-43, 2-48, 2-52
5560640 ..... 2-14, 2-15
5560641 3-8
5560642 ..... 2-2, 2-12, 2-13
5560643 5-47
5560644 2-29
5560645 2-60
5560647 5-24
5560648 ..... 4-22, 4-28, 4-34, 5-22
5560649 ..... 2-29, 2-60, 4-14, 4-34
5560653 2-44
5560654 .. 4-3, 4-6, 4-18, 4-19, 4-20, 4-21, 4-22, 4-28, 4-29, 4-34
5560655 ..... 2-65, 4-20, 4-22, 4-28, 5-25
5560656 5-26
5560660 2-14
5560661 2-5
5560662 5-24
5560663 ..... 4-34, 4-36, 4-37, 4-38, 4-39
5560664 ..... 2-44, 4-36, 4-37, 4-38
5560666 ..... 4-3, 4-21, 4-24, 4-27
5560667 4-28
5560673 . 2-33, 2-51, 2-64, 2-65, 4-9, 4-10, 4-11, 4-13, 4-36, 4-37, 4-38, 4-39, 5-51
5560675 ..... 2-24, 2-27, 2-33, 2-34, 5-52
5560679 ..... 2-29, 2-31, 2-32, 2-33
5560681 5-52
5560686 2-62
5560688 2-4
5560696 ..... 2-72, 2-73
5560698 2-48
5560703 .. 4-19, 4-20, 4-21, 4-22, 4-24, 4-27, 4-36, 4-37, 4-38, 4-39
5560704 5-44
5560712 ..... 2-36, 2-37
5560713 ..... 2-36, 2-37

Courtesy of Crane.Market

5560714 2-15
5560717 ..... 2-22, 2-23, 2-25
5560718 2-34
5560719 ..... 2-39, 2-41
5561157 2-17
5561559 .. 2-60, 2-61, 2-62, 2-63, 2-64, 2-65
5563017 2-56
5563025 ..... 4-19, 4-20, 4-37, 4-38, 5-51
5563028 5-31
5563029 5-31
5563038 2-33
5563051 2-48
5563062 ..... 2-6, 2-8
5563070 2-33
5563141 2-65
5563142 2-65
5563143 2-9
5563309 ..... 2-33, 2-35
5563310 2-73
5569003 . 4-17, 4-19, 4-20, 4-22, 4-23, 4-28, 4-34, 5-20, 5-22
5569059 2-76
5569711 .. 4-34, 4-35, 4-36, 4-37, 4-38, 4-39
5569833 .. 2-60, 2-61, 2-62, 2-63, 2-64, 2-65
5569835 ..... 3-39, 3-44, 3-47
5569836 ..... 2-3, 2-4
5569837 ..... 4-3, 4-4, 4-5
5569845 4-12
5569853 2-29
5569865 ..... 2-72, 2-73, 4-3
5569900 2-24
5569952 2-15
5569974 2-15
5569978 4-42
5569980 5-52
5569991 ..... 2-36, 2-37
5569997 ..... 4-18, 4-36, 4-37, 4-38, 4-39, 5-51
5570001 ..... 2-1, 2-4, 2-5, 2-6, 2-8
5570002 2-3
5570003 ..... 2-3, 5-24
5580002 5-24
5590003 ..... 2-17, 3-37, 3-38
5592018 2-77
561176 3-17
561956 3-21
562236 ..... 4-12, 4-14, 4-16
562386 5-33
563536 ..... 2-23, 2-24, 2-25
564266 5-4
565666 ..... 3-15, 3-15, 3-15, 3-15
5660004 2-25
5660014 2-25
582206 4-17
583406 ..... 4-11, 4-20
6010083 ..... 3-30, 5-14
6010115 ..... 3-41, 3-42
6010116 ..... 3-41, 3-43, 3-45
6010228 3-11
6010229 3-19
6010231 ..... 3-28, 3-29
6010250 ..... 3-8, 3-12
6010256 3-12
6010269 ..... 3-6, 3-7, 3-11
6010321 3-12
6010392 3-14
6010437 ..... 3-22, 3-23
6010472 3-27
6010489 3-24

Courtesy of Crane.Market

6010495 5-43
6010498 5-43
6010499 ..... 3-27, 3-30, 5-14
6010500 3-27
6010508 3-24
6010509 3-24
6010510 3-24
6010523 3-11
6010531 ..... 3-11, 3-12
6010537 ..... 3-15, 3-15
6010541 ..... 2-75, 3-26
6010551 3-15
6010553 3-15
6010563 3-19
6010565 3-25
6010577 ..... 3-14, 3-15
6010578 3-26
6010579 3-25
6010591 3-14
6010604 ..... 3-28, 3-29
6010605 3-25
6010613 ..... 3-6, 3-7, 3-22, 3-23
6010614 ..... 3-6, 3-7
6010615 ..... 3-6, 3-7
6010624 ..... 3-6, 3-7
6010653 3-10
6010694 3-15
6010696 3-15
6010697 ..... 3-15, 3-15, 3-15
6010698 3-15
6010699 3-15
6010700 3-15
6010701 3-15
6010702 3-15
6010703 3-15
6010704 3-15
6010705 3-15
6010706 3-15
6010707 3-15
6010794 3-47
6010823 ..... 3-9, 3-10
6010849 3-10
6010850 3-10
6010851 3-10
6010852 3-10
6010853 3-10
6018901 3-24
6018948 3-17
6019041 ..... 3-13, 3-17
6019048 ..... 3-8, 3-13
6019054 ..... 3-20, 3-21
6019059 3-17
6019064 5-47
6019065 5-47
6019066 5-47
6019068 3-53
6019089 2-74
6019093 3-35
6019098 3-17
6019099 3-17
6019139 3-16
6019155 ..... 3-17, 3-17
6019157 3-17
6019189 3-17
6019190 3-17
6019192 3-17
6019194 3-17
6019195 3-17

Courtesy of Crane.Market

6019196 3-17
6019205 ..... 3-17, 3-17
6019210 3-17
6019341 3-13
6019343 3-21
6020058 3-56
6020065 3-55
6029631 2-75
6029642 5-46
6029643 5-45
6030018 ..... 2-14, 2-15, 3-2
6030020 3-8
6030029 5-38
6030040 ..... 2-2, 2-10, 2-11, 2-12, 2-13, 3-3
6047152 ..... 3-49, 3-50
6047153 ..... 3-52, 3-53
6047156 ..... 3-49, 3-50, 3-53
6047157 ..... 3-49, 3-50
6047158 ..... 3-49, 3-50, 3-53
6047159 ..... 3-49, 3-50, 3-53
6047160 ..... 3-49, 3-50
6047161 ..... 3-49, 3-50, 3-53
6047162 ..... 3-49, 3-50, 3-53
6047164 3-53
6047166 3-53
6070005 3-18
6090037 3-45
6091241 ..... 3-42, 3-47
6091246 ..... 3-42, 3-47
6091249 3-42
6091250 3-42
6091251 3-42
6091252 3-42
6091253 3-42
6091255 ..... 3-39, 3-44
6091256 3-39
6091257 3-39
6091259 3-39
6091260 3-39
6091262 3-44
6091263 3-44
6091264 3-44
6091265 3-44
6091266 3-44
6091282 ..... 3-48, 3-51
6091288 3-47
6091289 3-47
6091291 3-47
6091292 3-47
6091293 3-47
6091294 3-47
6091311 3-47
6091313 3-51
6091314 ..... 3-42, 3-44
6091330 3-51
6091331 ..... 3-48, 3-51
6091332 3-51
6091333 3-48
6091335 3-51
6091336 3-48
6091374 3-39
6091418 3-48
6091419 3-48
6091420 3-48
6091591 3-36
6091592 3-36
6091701 3-13
6091702 3-13

Courtesy of Crane.Market

6091708 2-26
6091709 2-26
70029 2-22
7030161 2-76
7030162 2-76
7030163 2-77
7050006 5-33
7050007 5-33
70504 2-22
70506 2-22
7110112 3-8
7110155 3-38
7110157 2-75
7110242 ... 2-2, 2-10, 2-11, 2-12, 2-13, 2-14, 2-15
7110346 3-38
7110348 2-75
7140008 3-38
7140092 ..... 4-11, 5-25
7140346 3-38
7150001 2-5
7150003 2-4
7190001 .. 4-34, 4-35, 4-36, 4-37, 4-38, 4-39
7190005 3-8
72015 2-22
7240012 5-38
7280001 ..... 2-2, 2-14, 2-15
7280010 ..... 2-4, 2-5
7280022 3-4
72937 2-22
72951 2-22
7620041 2-44
7620055 2-49
7620065 2-40
7624750 ..... 2-45, 2-46
7624764 2-53
7624766 ..... 2-39, 2-41
7624794 2-56
7630003 ..... 2-57, 2-58
7630004 ..... 2-50, 2-58
7630005 2-58
7630015 ..... 2-38, 2-42, 2-51
7630016 ..... 2-50, 2-58
7630024 2-55
7630117 ..... 2-47, 2-48, 2-52
7630129 2-58
7630130 2-43
7630140 ..... 2-50, 2-51, 2-55, 2-58
7630158 2-55
7630180 ..... 2-47, 2-48, 2-54
7630196 2-51
7630197 ..... 2-50, 2-51
7630215 5-9
7630227 ..... 2-47, 2-48, 2-54
7630230 ..... 4-3, 4-4
7630239 ..... 2-47, 2-48, 2-54
7630243 5-8
7630249 2-44
7630255 2-49
7630286 2-43
7630311 ..... 2-44, 2-45
7630323 ..... 2-39, 2-40
7630327 5-7
7630332 ..... 2-47, 2-48
7630677 ..... 2-47, 2-48
7630678 ..... 2-47, 2-48
7630679 ..... 2-47, 2-48
7630680 ..... 2-47, 2-48

Courtesy of Crane.Market

7630681 ..... 2-47, 2-48
7630682 2-47
7630683 ..... 2-47, 2-48
76306842 2-48
7630685 ..... 2-47, 2-48
7630686 ..... 2-47, 2-48
7630687 2-47
7630688 2-47
7630689 2-50
7630691 ..... 2-47, 2-48
7630703 ..... 5-1, 5-4
7630704 ..... 5-1, 5-4
7630707 ..... 2-39, 2-40, 2-41
7630749 ..... 2-47, 2-48
7630755 ..... 2-38, 2-42, 2-51, 2-55, 2-59
7630756 2-54
7630759 ..... 2-38, 2-42, 2-51, 2-55
7630776 2-44
7630777 2-49
7630779 ..... 2-44, 2-45, 2-46, 2-49
7630796 ..... 2-51, 2-53
7630797 ..... 2-51, 2-53
7630820 2-52
7630821 2-52
7630833 2-52
7630835 2-52
7630838 2-55
7630842 ..... 5-10, 5-11
7630874 2-53
7630948 2-56
7630990 2-41
7714202 ..... 2-18, 2-19, 5-1
7714203 3-37
7714204 ..... 3-1, 5-27, 5-44
7720201 2-49
7720604 5-43
7721208 3-1
7721210 5-43
7734204 3-1
7740014 5-43
7740110 5-43
8 5-2
8010013 3-4
8010027 3-4
8010028 3-4
8010029 3-4
8010030 3-4
8010031 3-4
8010032 3-4
8010069 3-4
8010075 3-4
8010080 3-4
8010097 3-4
8010106 3-4
8010107 3-4
8010108 3-4
8010109 3-4
8010143 3-4
8010145 3-4
8010149 3-4
8010150 3-4
8010151 3-4
8010157 3-4
8010168 3-4
8010169 3-4
8010173 3-4
8010175 3-4
8010186 3-4

Courtesy of Crane.Market

8010245 3-10
8010249 2-20
8010250 2-20
8010272 ..... 3-10, 3-10, 3-10, 3-10, 3-10
8010273 ..... 3-10, 3-10, 3-10, 3-10, 3-10
8020009 5-7
8020018 5-38
8020036 5-7
8030044 ..... 4-12, 4-14, 4-16
8036201 ..... 2-40, 2-41
8036204 ..... 2-40, 2-41
8040106 2-57
8040107 2-57
8040111 2-57
8040112 2-57
8040114 2-57
8040115 2-57
8040135 5-9
8040198 ..... 2-44, 2-45, 2-46
8040201 ..... 2-44, 2-45, 2-46
8040207 ..... 2-44, 2-45, 2-46
8050097 2-59
8050098 2-59
8050099 2-59
8050100 2-59
8056021-006 ..... 2-38, 2-42
8070012 3-41
8070014 3-41
8070015 3-41
8070017 3-41
8070018 3-43
8070030 3-41
8070131 3-43
8070217 3-41
8070218 3-41
8070220 3-41
8070247 3-41
8070295 3-41
8070296 3-43
8070297 3-43
8070298 3-43
8070299 3-43
8070300 3-43
8070301 3-43
8080015 3-54
8080016 3-54
8080018 3-54
8080038 3-54
8080039 3-54
8080040 3-54
8080041 3-54
8080060 3-54
8080061 3-54
8080062 3-54
8080064 3-54
8080152 2-74
8080162 5-47
80962 2-22
810246 2-44
8113462 2-53
8113642 2-53
8113643 2-53
8113645 2-53
8113646 2-53
8113647 ..... 2-53, 2-53
8113648 2-53
8113649 2-53
8113650 2-53

Courtesy of Crane.Market

8113651 2-53
8113653 2-53
8113655 2-53
8113657 2-53
8113661 2-53
8130005 5-7
8140006 2-50
8140011 2-59
8140013 2-59
8140014 2-59
8150003 ..... 4-40, 4-41
8150004 ..... 4-40, 4-41
8150005 ..... 4-40, 4-41
8150009 ..... 4-40, 4-41
8150013 ..... 4-40, 4-41
8150082 ..... 4-40, 4-41
8150084 4-40
8150094 ..... 4-40, 4-41
8150135 ..... 4-40, 4-41
8150136 4-40
8150137 4-40
8150138 ..... 4-40, 4-41
8150139 4-40
8150140 ..... 4-40, 4-41
8150141 ..... 4-40, 4-41
8150142 4-40
8150143 ..... 4-40, 4-41
8150144 ..... 4-40, 4-41
8150145 ..... 4-40, 4-41
8150146 ..... 4-40, 4-41
8150147 4-40
8150148 ..... 4-40, 4-41
8150149 4-40
8150150 ..... 4-40, 4-41
8150151 ..... 4-40, 4-41
8150152 ..... 4-40, 4-41
8150153 ..... 4-40, 4-41
8150154 ..... 4-40, 4-41
8150155 ..... 4-40, 4-41
8150156 ..... 4-40, 4-41
8160047 5-19
81738 2-22
8180014 ..... 2-18, 2-19
81817 2-22
8190098 3-45
8190103 3-45
8190126 3-45
8190127 3-45
8190128 3-45
8190129 3-45
8190291 3-19
81970 2-22
8200004 3-8
82016 2-22
8210262 2-26
8220003 3-3
8220004 3-3
8220005 ..... 3-2, 3-3
8220006 ..... 3-2, 3-3
8220007 ..... 3-2, 3-3
8220009 3-3
8220010 3-3
8220011 3-3
8220014 3-3
8220015 3-3
8220017 3-3
8220020 ..... 3-2, 3-3
8220025 3-3

Courtesy of Crane.Market

8220027 ..... 3-2, 3-3
8220028 ..... 3-2, 3-3
8220031 ..... 3-2, 3-3
8220038 3-3
8220088 3-55
8220094 3-15
8220117 ..... 3-2, 3-3
8220119 3-55
8220120 3-55
8220126 ..... 3-2, 3-3
8220127 ..... 3-2, 3-3
8220128 ..... 3-2, 3-3
8220129 ..... 3-2, 3-3
8220130 ..... 3-2, 3-3
8220131 ..... 3-2, 3-3
8220132 ..... 3-2, 3-3
8220133 ..... 3-2, 3-3
8220134 ..... 3-2, 3-3
8220135 ..... 3-2, 3-3
8220136 ..... 3-2, 3-3
8220137 ..... 3-2, 3-3
8220138 ..... 3-2, 3-3
8220139 ..... 3-2, 3-3
8220140 ..... 3-2, 3-3
8220141 ..... 3-2, 3-3
8220142 ..... 3-2, 3-3
8220143 ..... 3-2, 3-3
8220144 ..... 3-2, 3-3
8220145 ..... 3-2, 3-3
8220146 ..... 3-2, 3-3
8220147 3-2
8220148 ..... 3-2, 3-3
8220150 3-3
8220153 3-3
8220154 3-3
8220155 3-3
8220156 3-2
8230099 3-19
9070909 2-48
961089 ..... 2-16, 4-2, 4-7
962839 ..... 5-45, 5-46
962849 5-48
967299 2-71
969989 2-48
969999 3-5
970009 .. 2-5, 2-16, 2-43, 2-71, 2-72, 2-73, 4-3, 4-6, 4-7, 5-35
970019 ..... 2-39, 2-40, 2-41
970029 . 2-18, 2-19, 2-22, 2-23, 2-25, 2-35, 2-48, 2-51, 2-52, 2-60, 2-77, 4-3, 4-3, 4-6, 4-6, 4-9, 4-10, 4-11, 4-12, 4-13, 4-14, 4-16, 4-19, 4-20, 4-22, 4-25, 4-26, 4-28, 4-30, 4-31, 4-32, 4-34, 4-36, 4-37, 4-38, 4-39, 5-5, 5-6, 5-7, 5-13, 5-15, 5-16, 5-17, 5-18, 5-20, 5-25, 5-40, 5-41, 5-49
970039 2-54
970049 2-16, 2-22, 2-39, 2-40, 2-41, 2-52, 4-3, 4-6, 4-7, 4-34, 4-36, 4-37, 4-38, 4-39, 5-44, 5-53
970059 ..... 2-4, 2-48
970069 2-46
970109 3-58
970119 ..... 3-58, 5-47
970129 ..... 3-59, 3-61
970159 ..... 2-31, 2-32
970169 ..... 3-30, 5-14
970229 2-71
970239 2-3, 2-4, 2-24, 2-29, 2-38, 2-42, 2-48, 2-51, 2-72, 2-73, 3-14, 3-16, 4-6, 5-24, 5-27
970249 2-54

Courtesy of Crane.Market

970259 ..... 2-22, 2-29, 2-60, 2-64, 2-65
970269 ... 2-29, 2-31, 2-32, 2-33, 2-53, 5-36, 5-37, 5-38, 5-39, 5-44
970279 ..... 2-71, 2-72, 2-73
970299 ..... 2-55, 2-75, 5-38
970349 ..... 3-5, 5-30
970369 ... 2-20, 2-23, 2-24, 2-25, 2-33, 2-62, 3-58, 5-5, 5-6, 5-38, 5-44, 5-52
970419 ... 2-36, 2-39, 2-40, 2-41, 2-51, 3-58, 3-61, 5-6
970426 ..... 2-22, 2-23, 2-25, 5-27
970439 ..... 2-36, 2-37
970448 ..... 2-30, 2-33
970449 . 2-1, 2-14, 2-22, 2-26, 2-29, 2-31, 2-32, 2-35, 2-38, 2-42, 2-75, 3-59, 3-61, 4-3, 5-53
970469 ... 2-16, 2-18, 2-19, 2-23, 2-24, 2-25, 2-29, 2-33, 2-38, 2-42, 2-51, 2-52, 2-60, 2-62, 2-64, 2-65, 3-59, 3-61, 4-3, 4-6, 4-7, 4-28
970479 ..... 2-20, 3-59
970489 ... 2-16, 2-22, 2-23, 2-24, 2-25, 2-27, 2-28, 2-31, 2-32, 2-60, 2-62, 2-64, 2-65, 4-3, 4-6, 4-7, 5-27, 5-44, 5-52
970499 5-38
970519 ..... 2-48, 2-54
970529 ..... 2-68, 2-69, 2-70, 3-59, 3-61
970549 3-5
970569 5-5
970599 ..... 2-18, 2-19
970639 5-52
970709 3-59
970849 ... 2-22, 2-23, 2-25, 2-60, 2-64, 2-65
970889 ..... 2-4, 2-14, 2-48, 2-69, 2-70, 2-75
970909 ... 2-16, 2-23, 2-24, 2-25, 2-43, 2-52, 2-62, 2-68, 2-69, 2-70, 4-7, 5-35, 5-36, 5-37, 5-39
970919 .. 2-16, 2-38, 2-42, 2-67, 2-75, 3-38, 4-7, 5-44
970929 2-43
970949 ..... 2-3, 2-60, 2-64, 2-65
970979 2-4
970989 2-62
971009 2-34
971069 ..... 2-39, 2-40, 2-41
971379 2-1
972019 ..... 2-39, 2-41
972029 5-8
972049 ..... 2-39, 2-40
972259 ..... 2-71, 2-72, 2-73, 5-40, 5-41
972439 ..... 5-6, 5-40, 5-41, 5-44
972449 ..... 2-27, 2-28, 2-29, 2-34
972469 .... 2-22, 2-23, 2-25, 2-29, 2-31, 2-32, 2-33
972479 ..... 2-24, 2-37
972489 .. 2-24, 2-27, 2-28, 2-31, 2-32, 2-33, 5-5, 5-40, 5-52
972509 ..... 2-29, 2-31, 2-32, 2-33
972539 ..... 2-28, 2-31, 2-32, 5-52
974129 ..... 4-21, 4-24, 4-27
974239 4-3, 4-4, 4-5, 4-6, 4-18, 4-22, 4-28, 4-29, 4-34, 4-36, 4-37, 4-38, 4-39
974269 ..... 4-34, 5-51
974279 ..... 4-19, 4-20, 4-34
974289 ..... 4-3, 4-6, 4-36, 4-37, 4-38, 4-39
974639 ..... 5-28, 5-29
974659 ..... 2-64, 2-65, 4-3, 4-39, 5-19, 5-40, 5-41
974679 ..... 5-17, 5-18
974689 .... 4-18, 4-21, 4-24, 4-27, 4-29, 4-39, 5-48
974709 . 2-31, 2-32, 4-3, 4-6, 4-39, 5-17, 5-18, 5-49
974729 ..... 4-18, 4-21, 4-24, 4-27, 4-29

Courtesy of Crane.Market

974769 ..... 5-28, 5-29
975089 ..... 2-64, 2-65
975729 3-44
978099 5-29
978329 2-33
978389 5-29
978409 2-29
978419 2-74
978629 2-52
98099 2-39
982129 2-46
984009 ... 4-3, 4-6, 4-19, 4-20, 4-22, 4-28, 4-34, 5-51
984049 . 2-29, 4-9, 4-10, 4-11, 4-13, 4-18, 4-19, 4-20, 4-21, 4-22, 4-24, 4-27, 4-28, 4-29, 5-48, 5-51
984069 . 2-18, 2-19, 2-39, 2-40, 2-77, 5-5, 5-6
984089 ..... 2-38, 2-42
984109 ... 2-18, 2-19, 2-20, 2-68, 2-69, 2-70, 3-58, 3-59, 3-61, 5-5, 5-40, 5-41
984149 ..... 2-3, 2-4, 2-60, 2-64, 2-65
984329 ..... 2-39, 2-40
984339 ..... 2-41, 2-56
984409 2-75
984449 2-17
984469 ..... 2-3, 2-4, 2-29, 2-31, 2-32, 2-33
986009 . 2-29, 2-31, 2-32, 2-33, 2-51, 4-3, 4-6, 4-34, 4-38, 4-39, 5-17, 5-18, 5-28, 5-29, 5-49, 5-51
986019 ... 2-16, 2-22, 2-23, 2-25, 2-31, 2-32, 2-35, 2-39, 2-40, 2-41, 2-43, 2-46, 2-48, 2-51, 2-52, 2-54, 2-64, 2-65, 3-5, 3-30, 3-58, 3-59, 3-61, 4-3, 4-6, 4-7, 4-9, 4-10, 4-11, 4-12, 4-13, 4-14, 4-16, 4-19, 4-20, 4-22, 4-25, 4-26, 4-28, 4-30, 4-31, 4-32, 4-34, 4-36, 4-37, 4-38, 4-39, 5-13, 5-14, 5-15, 5-16, 5-20, 5-28, 5-29, 5-35, 5-40, 5-41, 5-50, 5-52, 5-53
986039 5-52
986059 5-52
986069 2-60
986119 2-9
986159 4-3, 4-6, 4-18, 4-19, 4-20, 4-21, 4-22, 4-24, 4-27, 4-28, 4-29, 4-34, 4-36, 4-37, 4-38, 4-39, 5-51
986269 .. 2-4, 2-22, 2-23, 2-24, 2-25, 2-29, 2-31, 2-32, 2-33, 2-35, 2-39, 2-40, 2-48, 2-51, 2-53, 2-54, 2-55, 2-62, 2-64, 2-65, 2-71, 2-72, 2-73, 2-75, 3-5, 3-8, 3-14, 3-16, 3-58, 4-3, 4-6, 5-5, 5-6, 5-8, 5-12, 5-27, 5-30, 5-36, 5-37, 5-38, 5-39, 5-44, 5-47, 5-52
9862969 2-60
986299 .. 2-7, 2-14, 2-20, 2-22, 2-23, 2-24, 2-25, 2-26, 2-27, 2-28, 2-29, 2-31, 2-32, 2-35, 2-36, 2-37, 2-38, 2-39, 2-40, 2-41, 2-42, 2-44, 2-46, 2-48, 2-51, 2-52, 2-54, 2-60, 2-62, 2-64, 2-65, 2-69, 2-70, 2-72, 2-73, 3-4, 3-5, 3-58, 3-59, 3-61, 4-3, 4-6, 5-5, 5-6, 5-27, 5-31, 5-38, 5-40, 5-41, 5-44, 5-47, 5-53
986359 .. 2-4, 2-14, 2-22, 2-23, 2-24, 2-25, 2-27, 2-28, 2-29, 2-31, 2-32, 2-33, 2-38, 2-42, 2-48, 2-52, 2-60, 2-62, 2-64, 2-65, 2-67, 2-68, 2-69, 2-70, 2-71, 2-72, 2-73, 5-36, 5-37, 5-39, 5-44
9870099 2-4
987089 .. 2-20, 3-61, 4-9, 4-10, 4-11, 4-13, 4-18, 4-22, 4-24, 4-27, 4-28, 4-29, 5-19, 5-48
987099 .. 2-5, 2-16, 2-18, 2-19, 2-22, 2-31, 2-32, 2-35, 2-40, 2-41, 2-43, 2-48, 3-59, 4-3, 4-6, 4-7, 4-25, 4-26, 4-30, 4-31, 4-32, 5-5, 5-6, 5-7, 5-13, 5-15, 5-16, 5-17, 5-18, 5-20, 5-25, 5-28, 5-35, 5-50
987109 .. 2-3, 2-17, 2-20, 2-21, 2-22, 2-23, 2-24, 2-

Courtesy of Crane.Market

25, 2-29, 2-33, 2-35, 2-38, 2-42, 2-48, 2-54, 2-71, 2-72, 2-73, 2-75, 3-8, 3-14, 3-16, 3-58, 4-3, 4-6, 5-8, 5-24, 5-27
987119 . 2-7, 2-18, 2-19, 2-20, 2-22, 2-23, 2-24, 2-25, 2-26, 2-29, 2-31, 2-32, 2-33, 2-35, 2-36, 2-37, 2-51, 2-75, 3-5, 3-58, 3-59, 3-61, 4-3, 4-6, 5-6, 5-27, 5-40, 5-41
987129 3-59
987139 . 2-2, 2-3, 2-4, 2-12, 2-13, 2-14, 2-15, 2-38, 2-39, 2-40, 2-41, 2-42, 2-44, 2-46, 2-48, 2-52, 2-53, 2-56, 2-60, 2-62, 2-64, 2-65, 2-75
987159 2-1
987249 2-9
987349 . . . 4-3, 4-6, 4-18, 4-19, 4-20, 4-21, 4-22, 4-24, 4-27, 4-28, 4-29, 4-34
9877109 2-4
988179 . . . 2-29, 2-31, 2-32, 2-33, 2-72, 2-73
988229 2-14
9920014 . . . . . 2-27, 2-28
9920016 . . . . . 2-22, 2-23, 2-25
9920017 5-52
9920018 5-52
9939464 . . . . . 5-40, 5-41
9940001 . . . . . 2-18, 5-1, 5-5
9940005 . . . . . 5-5, 5-6
9940018 . . . . . 5-1, 5-4
9960007 5-33
9980003 . . . . . 5-28, 5-29, 5-33
9980004 . . . . . 5-28, 5-29
9980005 . . . . . 5-28, 5-29, 5-33
9980006 . . . . . 5-28, 5-28, 5-29, 5-29
9980008 5-33
9980012 . 2-3, 2-4, 2-17, 2-21, 2-29, 2-30, 2-31, 2-32, 2-33, 2-34, 2-35, 2-44, 2-49, 2-66, 2-75
A08082A 2-60
IP3040534 . . . . . 4-3, 4-4, 4-5, 4-6
IP8210262 2-26
NOTE 3 . . . . . 2-8, 2-8
PNNW 4-31, 4-31, 4-31, 4-31
SEE NOTE 5-29

Courtesy of Crane.Market