Troubleshooting Guide

TB42

diesel - gasoline - LPG

TB50

diesel - gasoline - LPG

Snorkel

OmniQuip Snorkel INTERNATIONAL

P.O. Box 1160
St. Joseph, MO 64502-1160
Phone: (816) 364-0317
Fax: (816) 390-9379
www.snorkelusa.com

P/N 074446
Sept. 1998

GENERAL INFORMATION

This manual contains procedures for locating and correcting the majority of problems which may develop on the “Snorkelift” **TB 42/50** Aerial Platform built after June 1997.

Since the majority of malfunctions experienced on equipment in the aerial platform Industry are associated with the hydraulic and electrical systems, great effort has been made to develop a guide which insures that procedures regarding these areas are given the fullest possible attention and detail. As a result of these efforts, the aerial platform has been divided into twelve distinct groups with each group covered by an individual section. The Sections are as follows:

1.) Engine Diagnostics
2.) Hydraulic Pump Diagnostics
3.) Steering System Diagnostics
4.) Drive System Diagnostics
5.) Emergency Power System Diagnostics
6.) Swing System Diagnostics
7.) Platform Rotation System Diagnostics
8.) Platform Leveling System Diagnostics
9.) Boom Elevation System Diagnostics
10.) Telescope System Diagnostics
11.) Fuel System Diagnostics
12.) Accessories Diagnostics

NOTES, CAUTIONS AND DANGERS

The terms ***NOTE***, ***CAUTION***, and ***DANGER*** appear throughout this manual and have specific meanings.

A ***NOTE*** provides additional or special information to make a step or procedure easier or clearer. Disregarding a ***NOTE*** might cause inconvenience, but would not cause equipment damage or personal injury.

A **⚠CAUTION** is provided in a procedure wherever minor personal injury or equipment damage could result. Disregarding a ***CAUTION*** could cause damage to the machine; however serious personal injury is unlikely.

⚠DANGER is the most serious and emphasizes areas where personnel injury and even death could result from negligence. Permanent mechanical damage is also highly probable. ***DANGER*** signs are to be taken seriously. In some cases, serious injury or death has resulted from disregarding a ***DANGER.***

NOTE: Engine maintenance and troubleshooting information not contained in this manual may be found in the engine maintenance manual originally provided with the machine, or from the Engine Manufacture/Dealer Network.

It should be recognized that every person who performs testing and diagnostic procedures and every person supervising any of these functions must be properly trained and qualified. If a problem should occur which is not covered by this manual or which cannot be corrected using the listed corrective actions, technically qualified guidance from the Service Department of Snorkel International Inc., should be obtained prior to proceeding further. Tel: (816) 364-0317

NOTE: Diagnostic procedures basically consist of a logical process of elimination. For this reason, it is very important that the steps be performed in the order in which they are presented. Always begin by localizing the problem and defining the symptoms as accurately as possible. When the problem has been localized, make sure to completely read and comprehend the appropriate flow chart. Do not attempt to make shortcuts.

MANUAL DESIGN

Each symptom described is followed by a list of inspections to be performed. Each inspection is in the form of a flowchart. A set of detailed checks are then performed at the component and/or related areas which confirm or decline the outcome. If the inspection is declined the flowchart will refer to the next step to be performed until the problem is confirmed. The diagnosis then enables a determination.

Example: Problem Solving Procedure

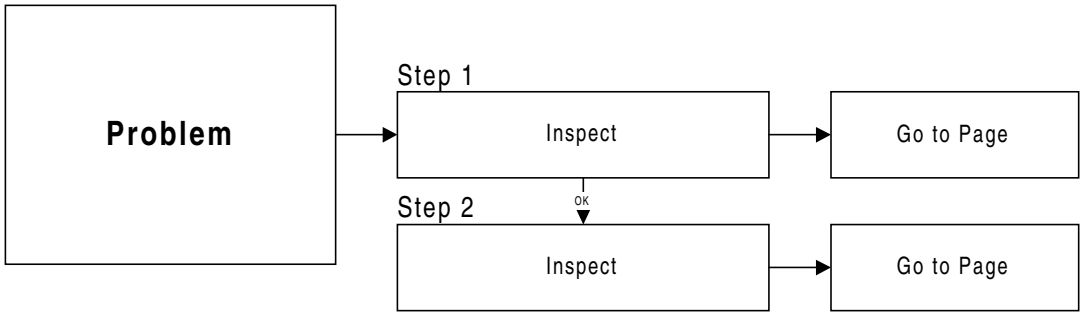

Example: Flowchart Procedure

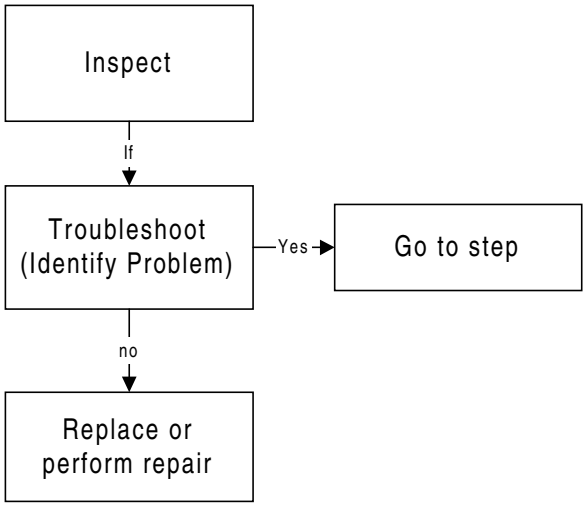

EQUIPMENT NEEDED:

Multimeter: A meter designed to read voltage, amperage and resistance.

Pressure Test Gauge: A pressure gauge rated for 0 - 1000 psi.

A pressure gauge rated for 0 - 5000 psi.

Tachometer: A meter designed to measure engine RPM on gas and/or diesel.

(Photo Tachometer is recommended)

Flowmeter: A meter designed to measure fluid flow.

Stopwatch: A tool designed to measure time.

SYMPTOM	PAGE NUMBER

Section One - Engine Diagnostics

Engine starter fails to operate (No Electrical)	9
Starter disengages before engine starts	10
Engine cranks over but will not start	10
Engine starts then shuts down after 30 seconds	11
Engine will not accelerate	11
Engine over accelerates	12
Engine will not start from platform control	12
Engine starts while cranking, then dies when key switch is released	13

Section Two - Hydraulic Diagnostics

Hydraulic system functions on emergency power only	39
Hydraulic pump stays on stroke	39
Hydraulic oil overheats while idling	39
Hydraulic oil overheats during operation	40
Hydraulic functions are sluggish	40
Hydraulic pump will not build pressure	40
Hydraulic pump will not build enough pressure	41
Flow from hydraulic pump is too low	41
Flow from hydraulic pump is too high (kills engine)	41

Section Three - Steering System Diagnostics

Machine will not steer	55

SYMPTOM	PAGE NUMBER

Section Four - Drive System Diagnostics

Drive system is not operational with controller in either direction	63
No forward drive (Reverse OK)	64
No reverse drive (Forward Ok)	64
Drive high range not operating	65
Machine drives at full speed with platform raised and/or extended	65
Brakes will not release	65
Only one wheel turns (2 wheel drive)	66
One wheel turns faster than other (2 wheel drive)	66

Section Five - Emergency Power System Diagnostics

Emergency pump motor non-operational	87
No functions when on emergency power	87

Section Six - Swing System Diagnostics

Swings only in one direction	95
No response from swing when platform controls are activated	95
No response from swing when ground controls are activated	96
Swings erratically in either direction	96
Swings faster one way than other	96
Swing brake will not hold	97
Swings too slow	97

Section Seven - Platform Rotation System Diagnostics

Platform rotate does not operate	113
Platform rotates too fast	113
Platform rotates too slow	113
Platform rotates itself	113

SYMPTOM ***PAGE NUMBER***

Section Eight - Platform Leveling System Diagnostics

Platform will not maintain level as boom raises or lowers **121**

Platform will not maintain level with machine off **121**

Platform bleeds down **121**

Platform level will not work from ground control **121**

Platform level will not work from platform control **122**

Platform level up function is inoperative **122**

Platform level down function is inoperative **122**

Section Nine - Boom Elevation System Diagnostics

Boom raises but will not stay elevated **135**

Boom will not raise from platform control **135**

Boom will not raise from ground control **135**

Boom raises slow from platform **135**

Section Ten - Telescope System Diagnostics

Boom will not retract from ground control (Platform Control Ok) **143**

Boom will not retract from platform control (Ground Control Ok) **143**

Boom will not extend from ground control (Platform Control Ok) **143**

Boom will not extend from platform control (Ground Control Ok) **144**

Boom drifts in **144**

Section Eleven - Fuel System Diagnostics

Engine will not start on gasoline, but will start on L.P. **157**

Engine will not start on L.P., but will start on gasoline **157**

SYMPTOM	PAGE NUMBER

Section Twelve - Accessories Diagnostics

AC Generator will not function	**165**
AC Generator has low voltage	**165**
Machine will not steer	**165**

SECTION ONE:
ENGINE DIAGNOSTICS

Chart 1

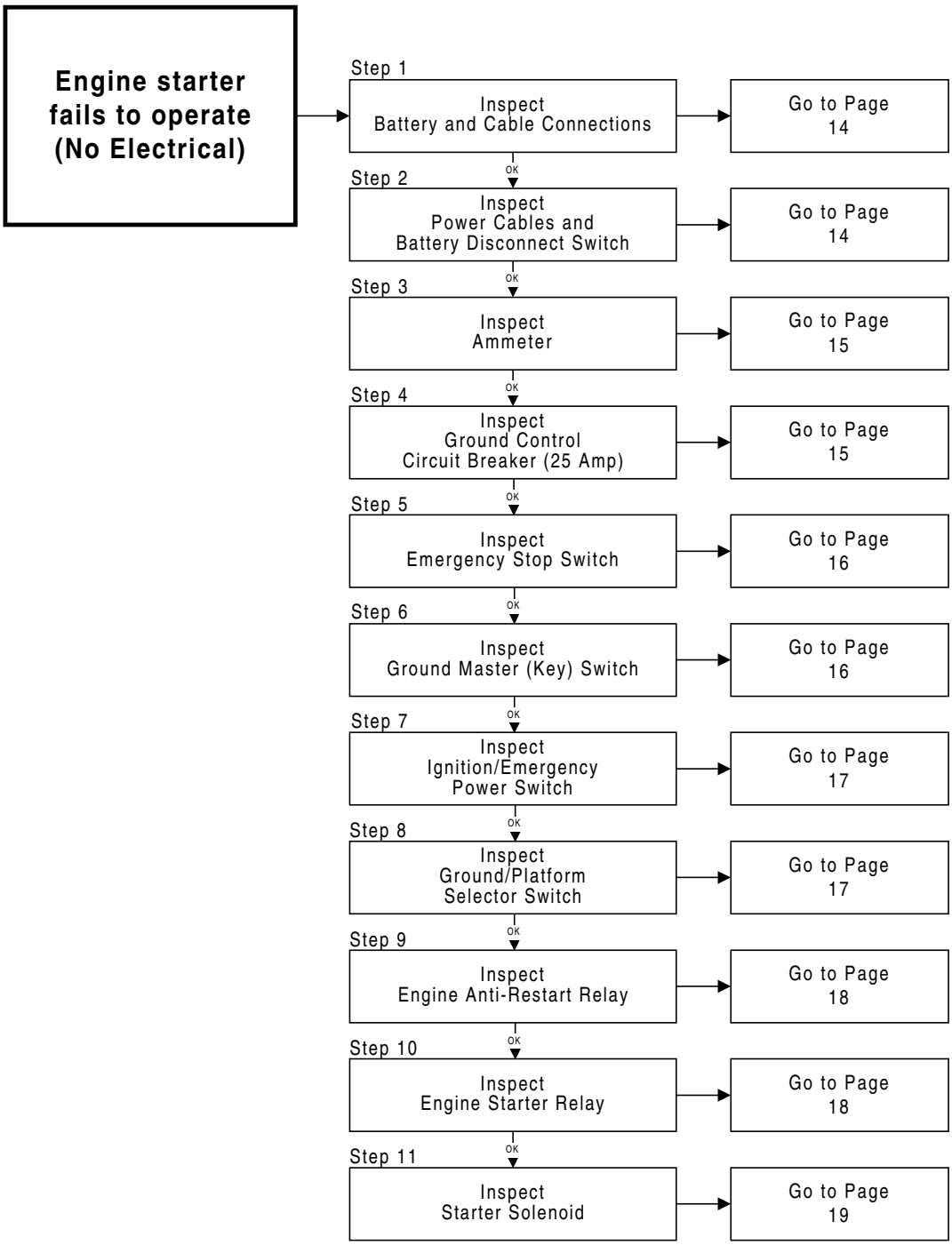
Engine starter fails to operate (No Electrical)
Step 1
Inspect Battery and Cable Connections
Go to Page 14
OK
Step 2
Inspect Power Cables and Battery Disconnect Switch
Go to Page 14
OK
Step 3
Inspect Ammeter
Go to Page 15
OK
Step 4
Inspect Ground Control Circuit Breaker (25 Amp)
Go to Page 15
OK
Step 5
Inspect Emergency Stop Switch
Go to Page 16
OK
Step 6
Inspect Ground Master (Key) Switch
Go to Page 16
OK
Step 7
Inspect Ignition/Emergency Power Switch
Go to Page 17
OK
Step 8
Inspect Ground/Platform Selector Switch
Go to Page 17
OK
Step 9
Inspect Engine Anti-Restart Relay
Go to Page 18
OK
Step 10
Inspect Engine Starter Relay
Go to Page 18
OK
Step 11
Inspect Starter Solenoid
Go to Page 19

Chart 2

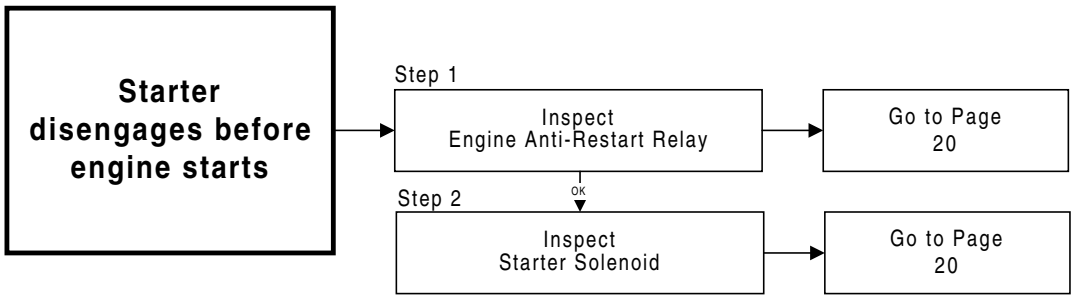

Chart 3

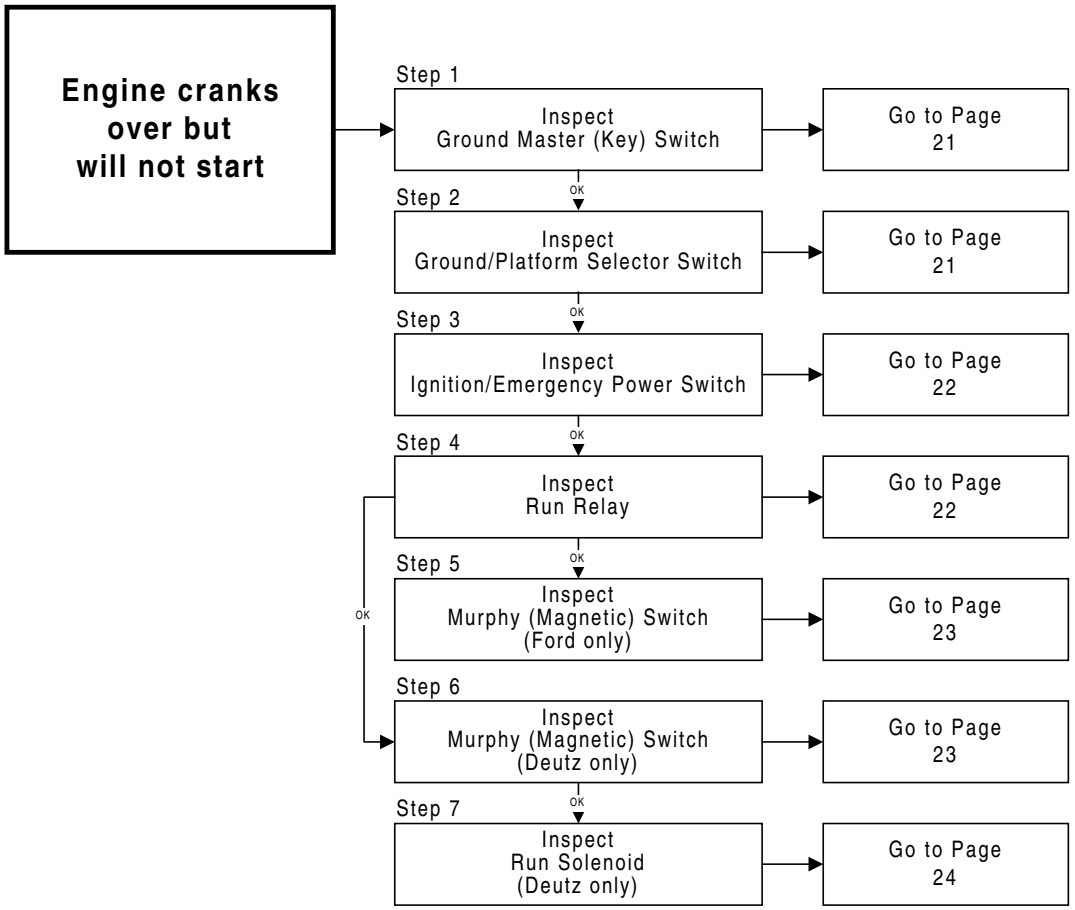

Chart 4

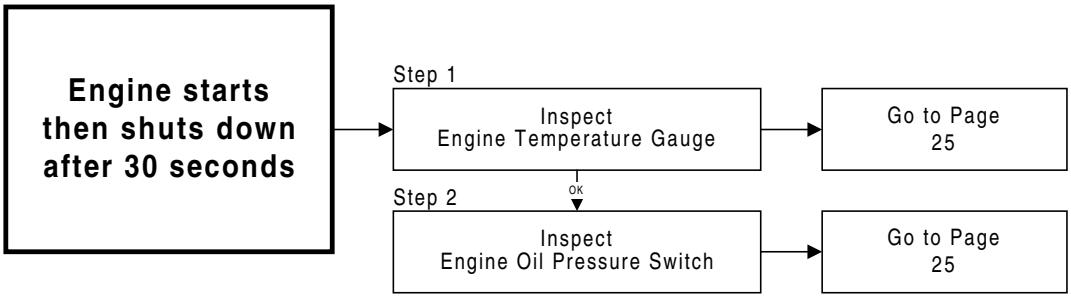

Chart 5

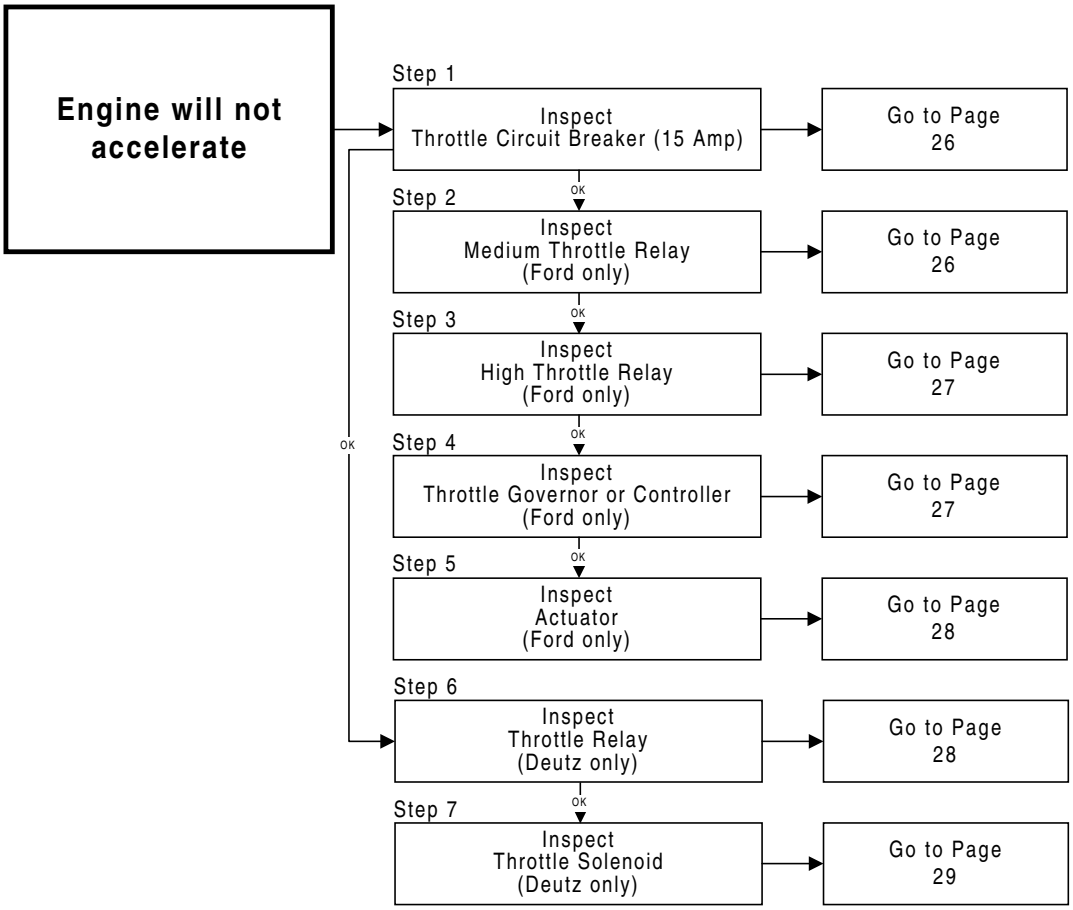

Chart 6

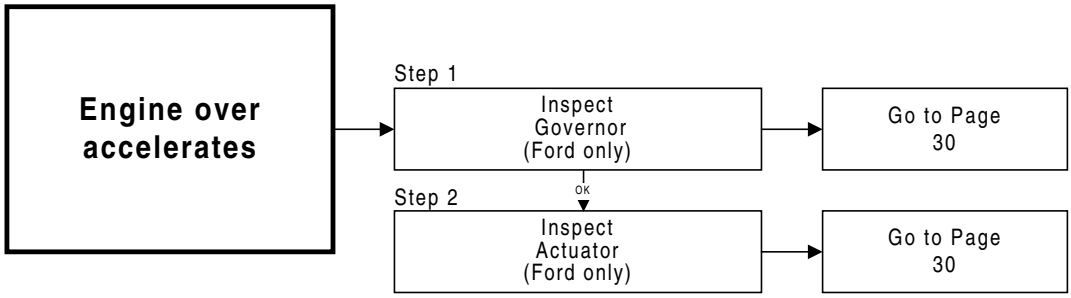

Chart 7

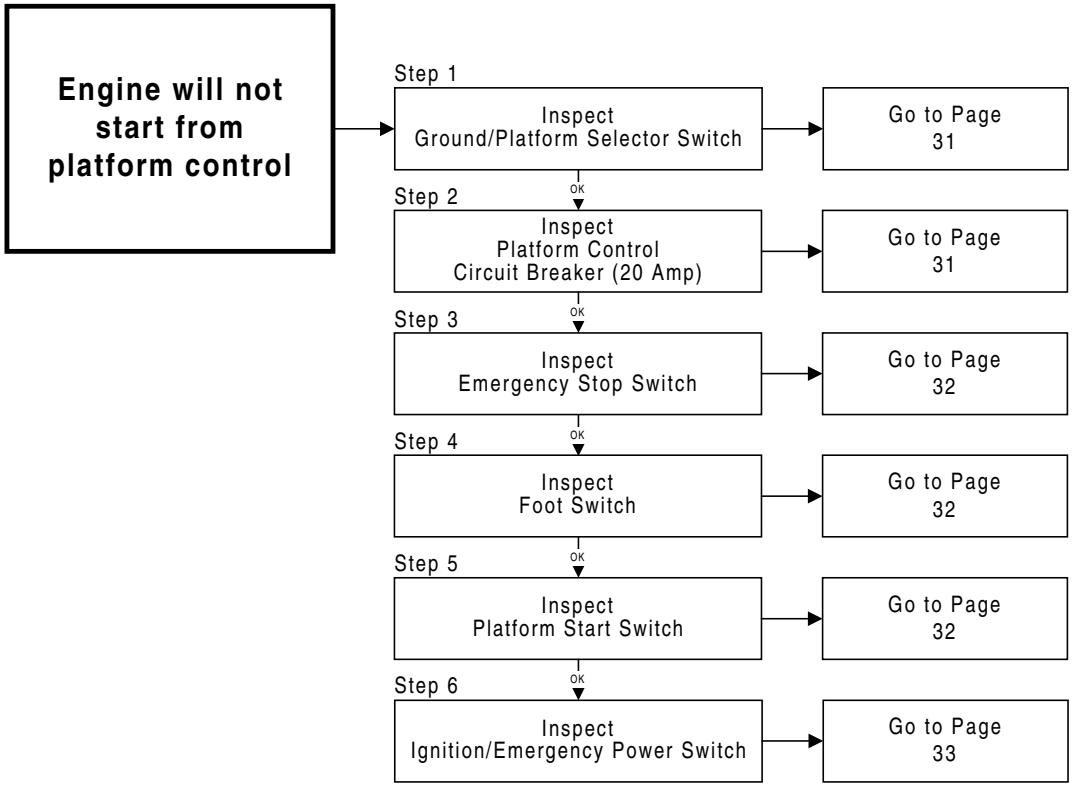

Chart 8

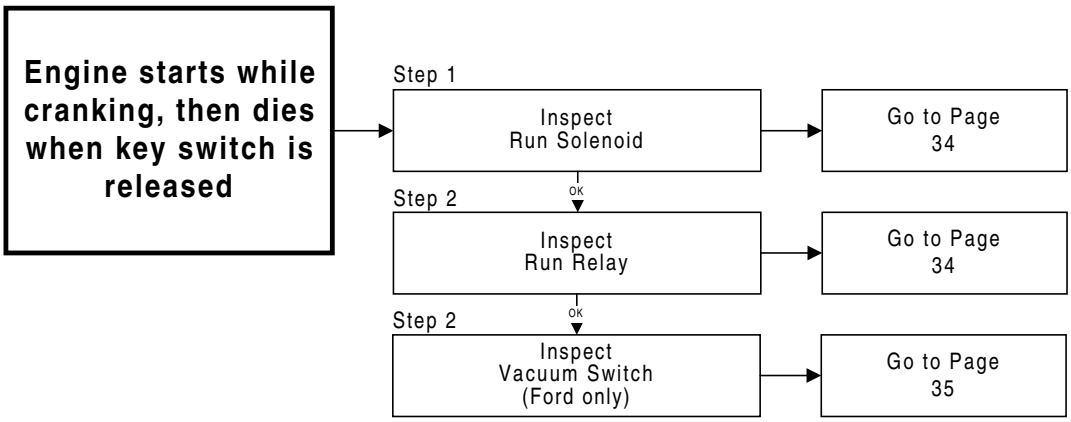
Engine starts while cranking, then dies when key switch is released
Step 1
Inspect Run Solenoid
Go to Page 34
OK
Step 2
Inspect Run Relay
Go to Page 34
OK
Step 2
Inspect Vacuum Switch (Ford only)
Go to Page 35

Engine starter fails to operate (No Electrical)

⚠DANGER

Batteries omit hydrogen and oxygen elements that can combine explosively. Do not smoke or permit open flames or sparks when checking batteries

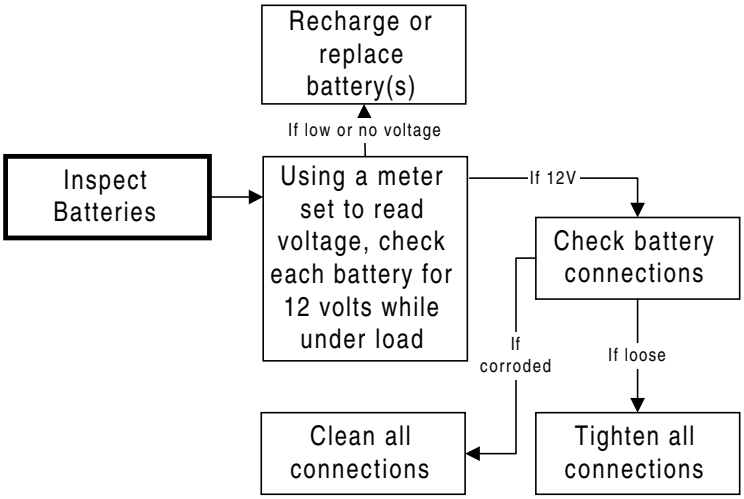

Step 1

Step 2

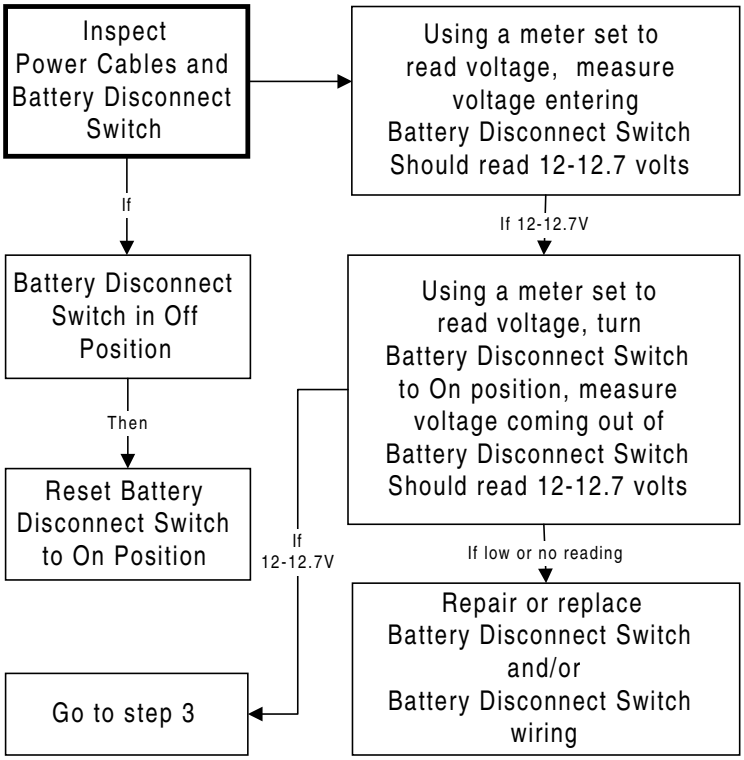

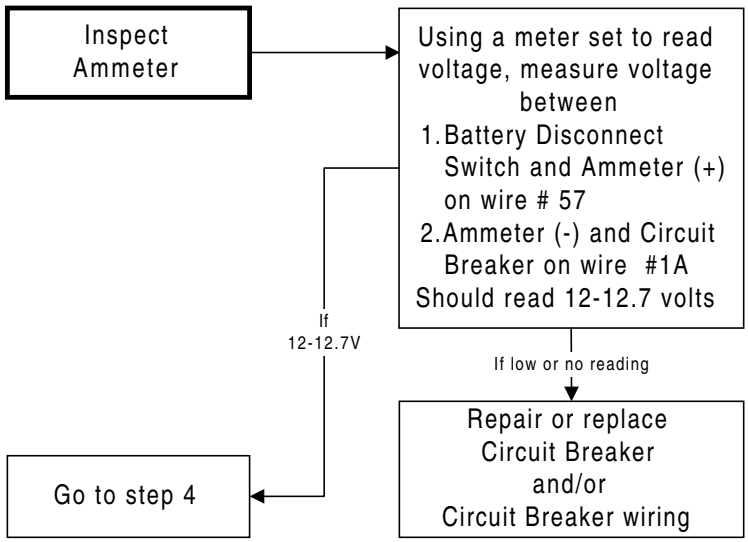
Inspect Ammeter
Using a meter set to read voltage, measure voltage between
1. Battery Disconnect Switch and Ammeter (+) on wire # 57
2. Ammeter (-) and Circuit Breaker on wire #1A
Should read 12-12.7 volts
If 12-12.7V
If low or no reading
Repair or replace Circuit Breaker and/or Circuit Breaker wiring
Go to step 4

Step 3

Step 4

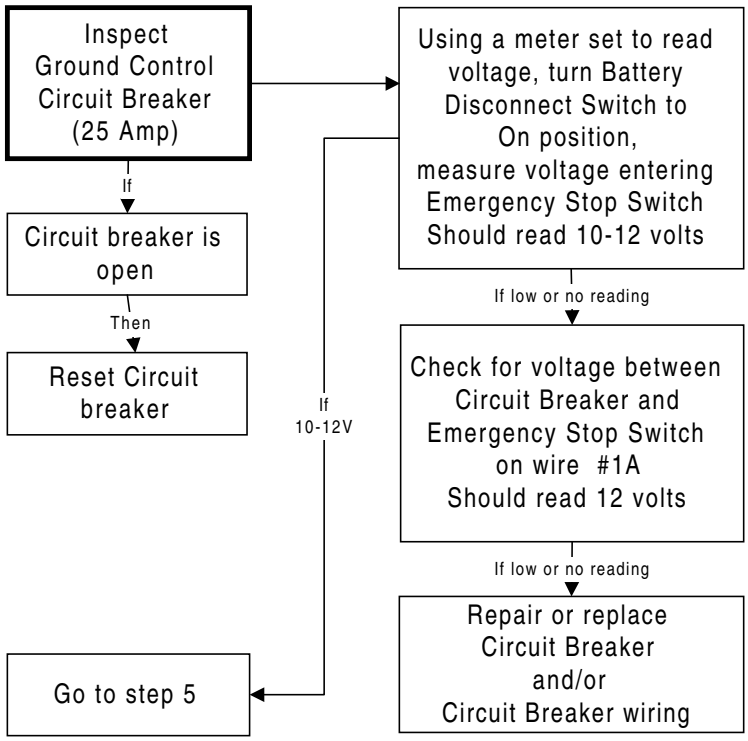
Inspect Ground Control Circuit Breaker (25 Amp)
If
Circuit breaker is open
Then
Reset Circuit breaker
Using a meter set to read voltage, turn Battery Disconnect Switch to On position, measure voltage entering Emergency Stop Switch
Should read 10-12 volts
If low or no reading
Check for voltage between Circuit Breaker and Emergency Stop Switch on wire #1A
Should read 12 volts
If 10-12V
If low or no reading
Repair or replace Circuit Breaker and/or Circuit Breaker wiring
Go to step 5

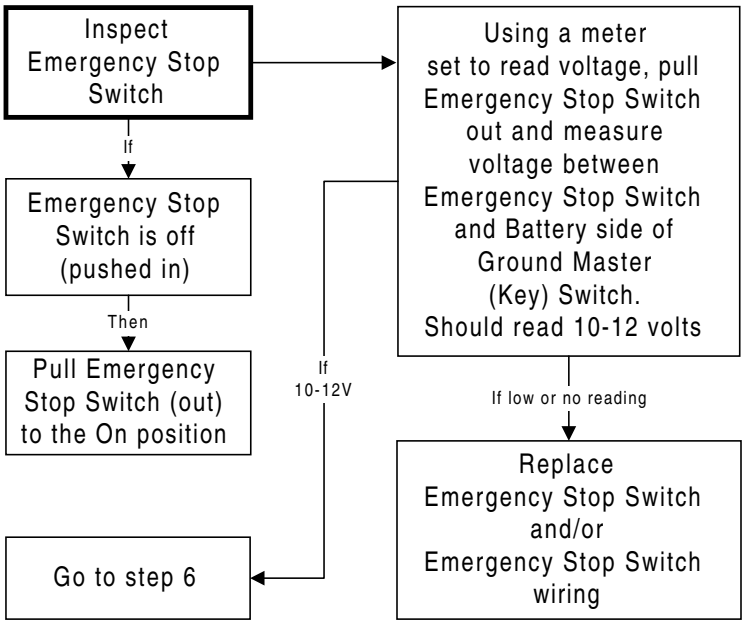
Inspect Emergency Stop Switch
If
Emergency Stop Switch is off (pushed in)
Then
Pull Emergency Stop Switch (out) to the On position
Go to step 6
If 10-12V
Using a meter set to read voltage, pull Emergency Stop Switch out and measure voltage between Emergency Stop Switch and Battery side of Ground Master (Key) Switch. Should read 10-12 volts
If low or no reading
Replace Emergency Stop Switch and/or Emergency Stop Switch wiring

Step 5

Step 6

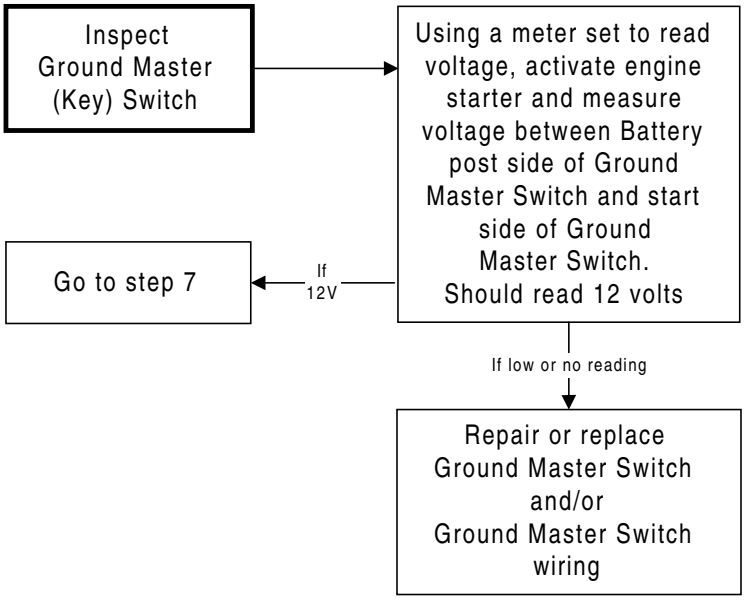
Inspect Ground Master (Key) Switch
Using a meter set to read voltage, activate engine starter and measure voltage between Battery post side of Ground Master Switch and start side of Ground Master Switch. Should read 12 volts
If 12V
Go to step 7
If low or no reading
Repair or replace Ground Master Switch and/or Ground Master Switch wiring

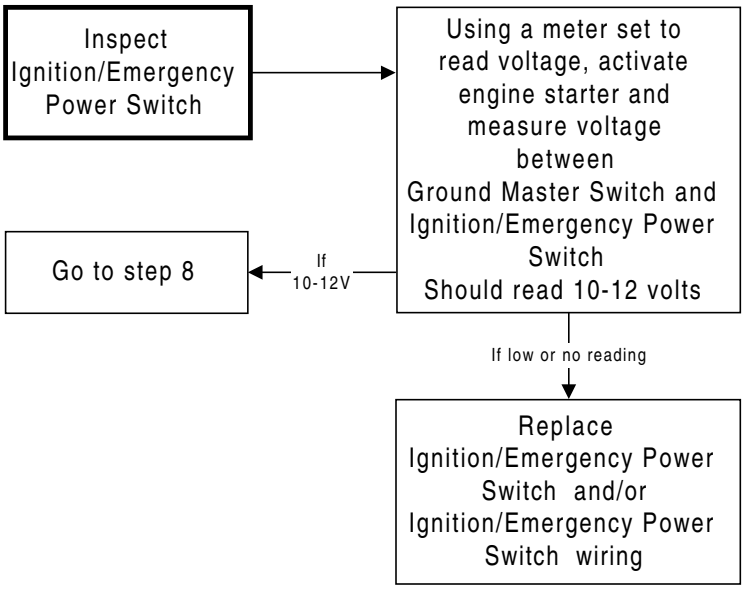
Inspect Ignition/Emergency Power Switch
Using a meter set to read voltage, activate engine starter and measure voltage between Ground Master Switch and Ignition/Emergency Power Switch Should read 10-12 volts
If 10-12V
Go to step 8
If low or no reading
Replace Ignition/Emergency Power Switch and/or Ignition/Emergency Power Switch wiring

Step 7

Step 8

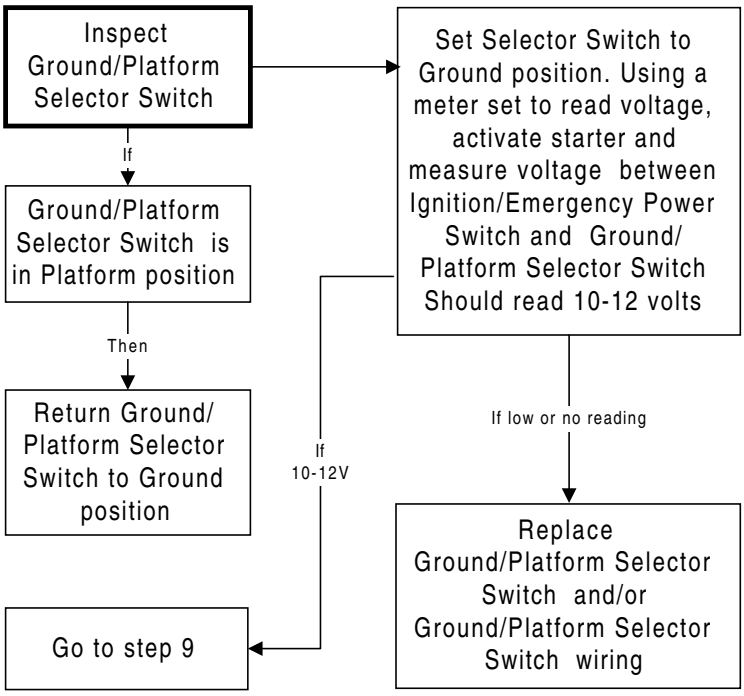
Inspect Ground/Platform Selector Switch
Set Selector Switch to Ground position. Using a meter set to read voltage, activate starter and measure voltage between Ignition/Emergency Power Switch and Ground/ Platform Selector Switch Should read 10-12 volts
If
Ground/Platform Selector Switch is in Platform position
Then
Return Ground/ Platform Selector Switch to Ground position
If 10-12V
Go to step 9
If low or no reading
Replace Ground/Platform Selector Switch and/or Ground/Platform Selector Switch wiring

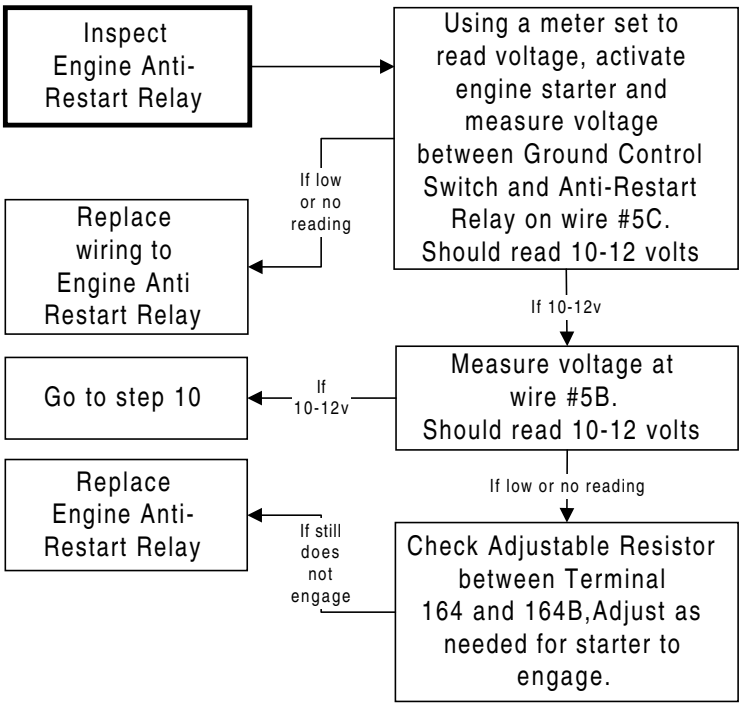

Step 9

Step 10

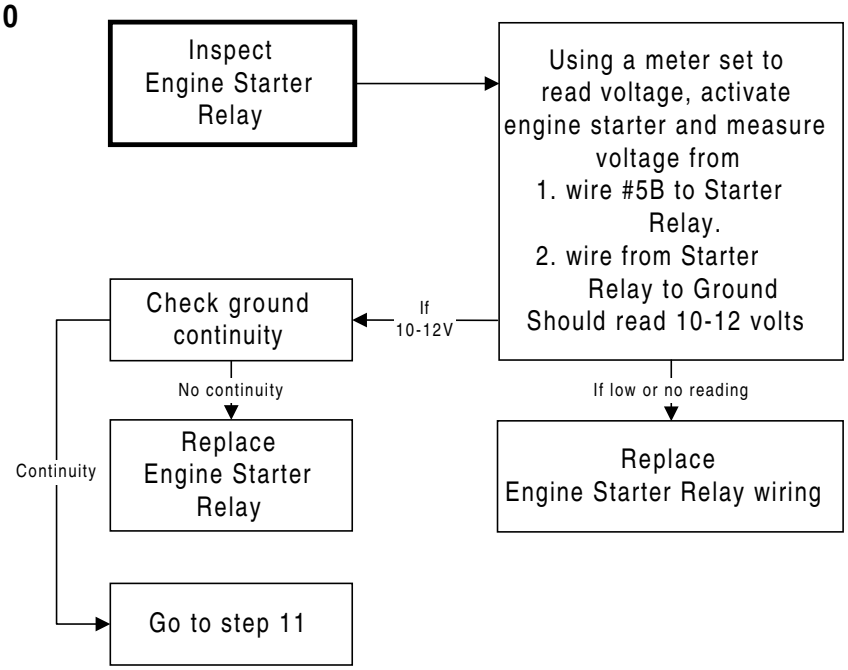

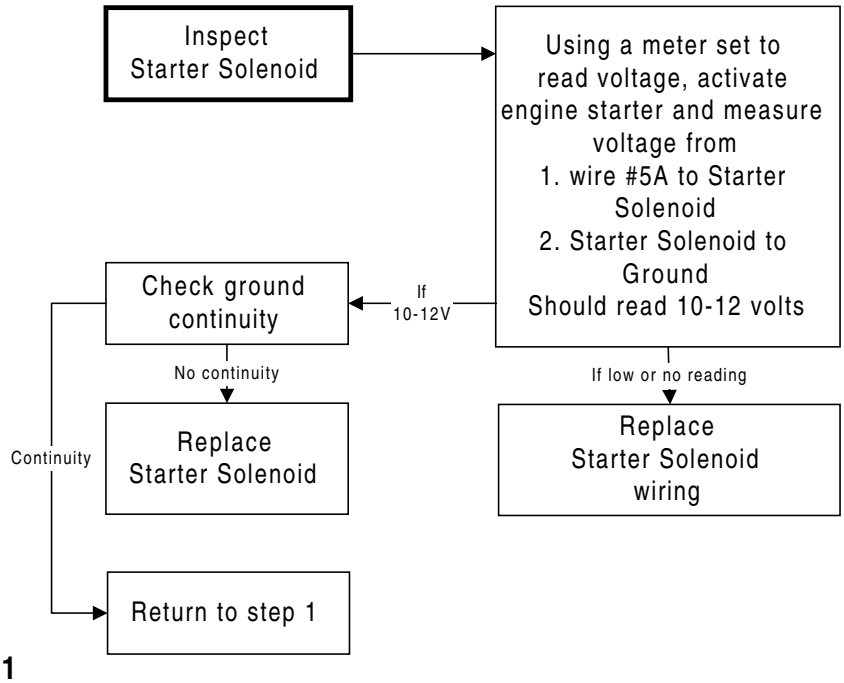
Inspect
Starter Solenoid
Using a meter set to read voltage, activate engine starter and measure voltage from
1. wire #5A to Starter Solenoid
2. Starter Solenoid to Ground
Should read 10-12 volts
If
10-12V
Check ground continuity
No continuity
If low or no reading
Replace
Starter Solenoid
Replace
Starter Solenoid
wiring
Continuity
Return to step 1

Step 11

Starter disengages before engine starts

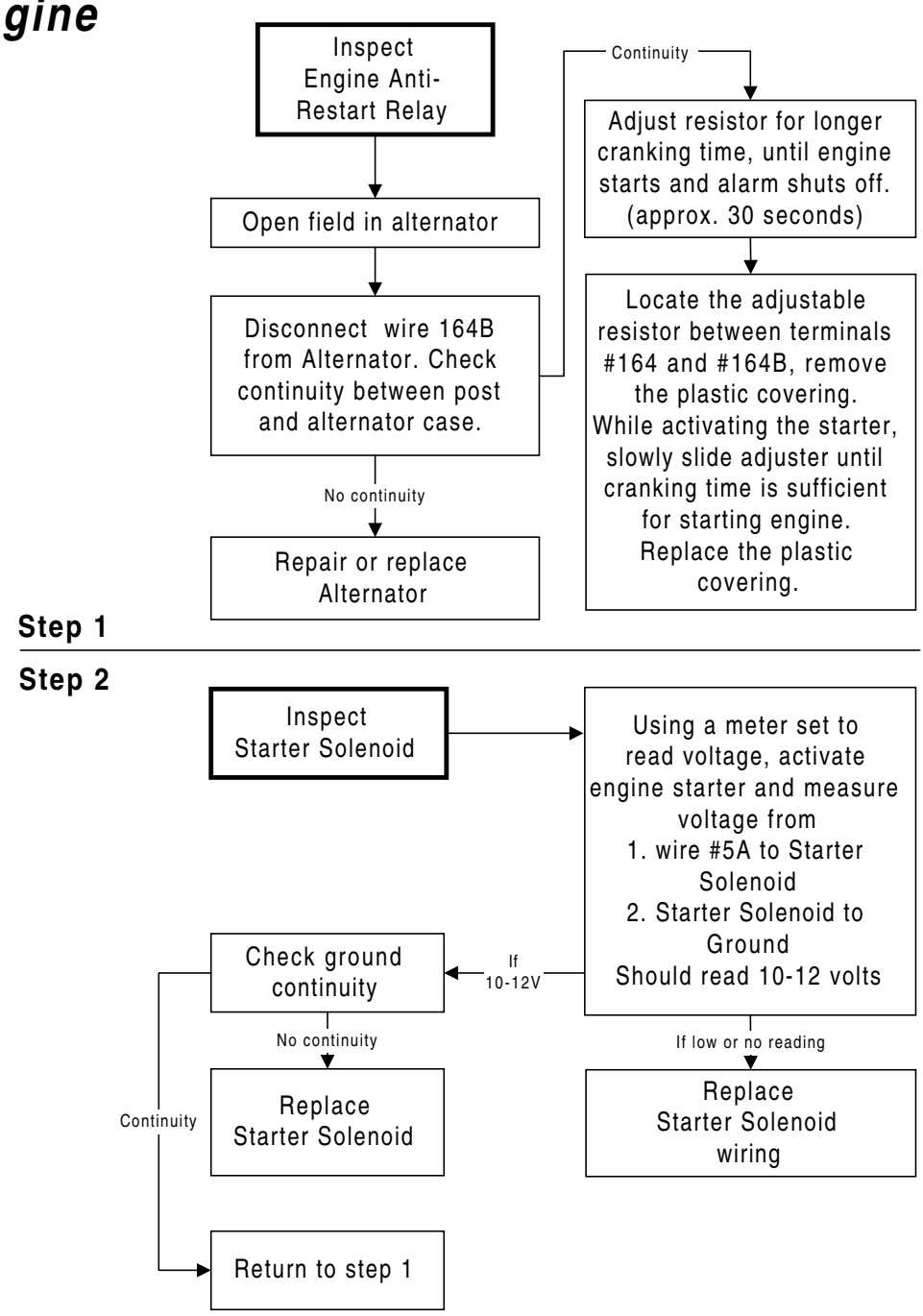

Engine cranks over but will not start

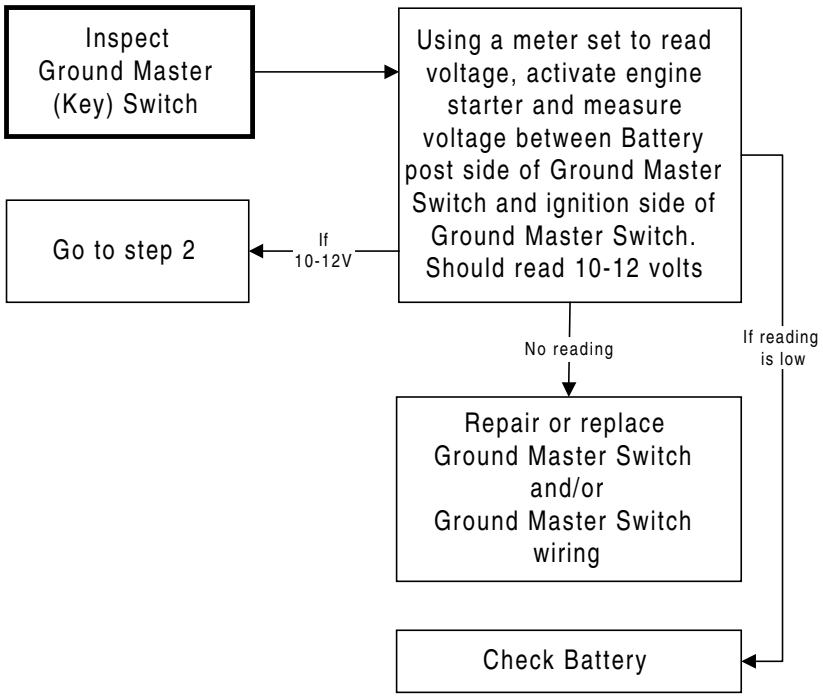

Step 1

Step 2

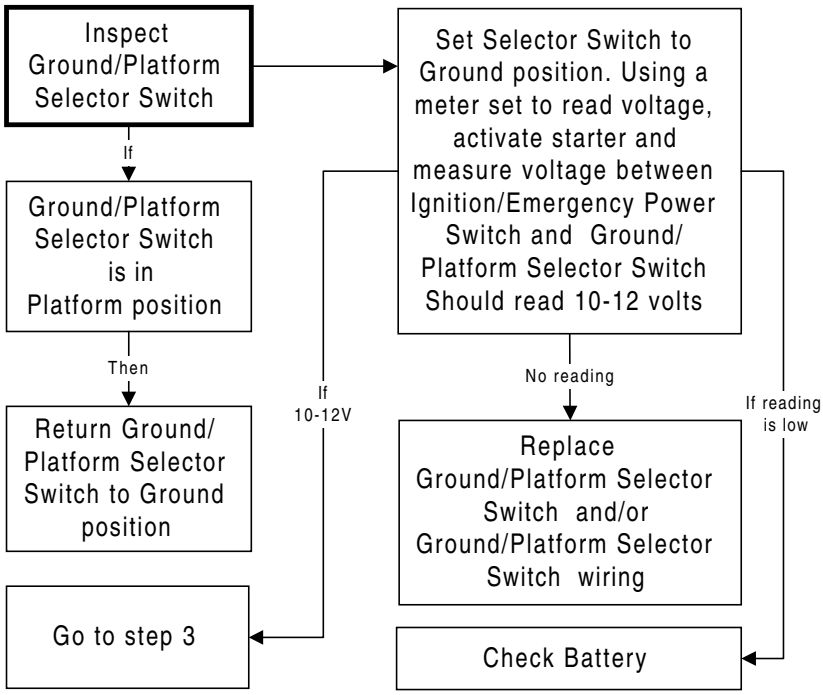

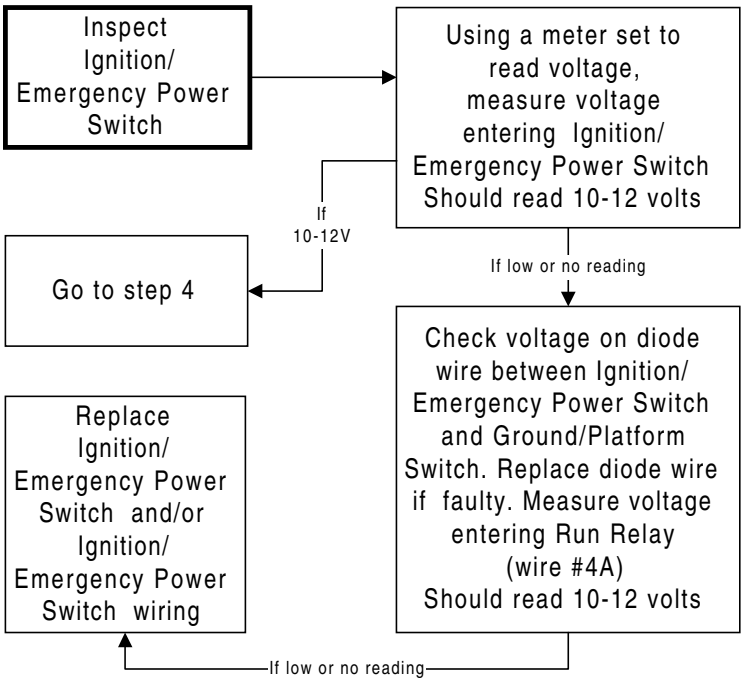
Inspect Ignition/ Emergency Power Switch
Using a meter set to read voltage, measure voltage entering Ignition/ Emergency Power Switch Should read 10-12 volts
If 10-12V
Go to step 4
If low or no reading
Check voltage on diode wire between Ignition/ Emergency Power Switch and Ground/Platform Switch. Replace diode wire if faulty. Measure voltage entering Run Relay (wire #4A) Should read 10-12 volts
Replace Ignition/ Emergency Power Switch and/or Ignition/ Emergency Power Switch wiring
If low or no reading

Step 3

Step 4

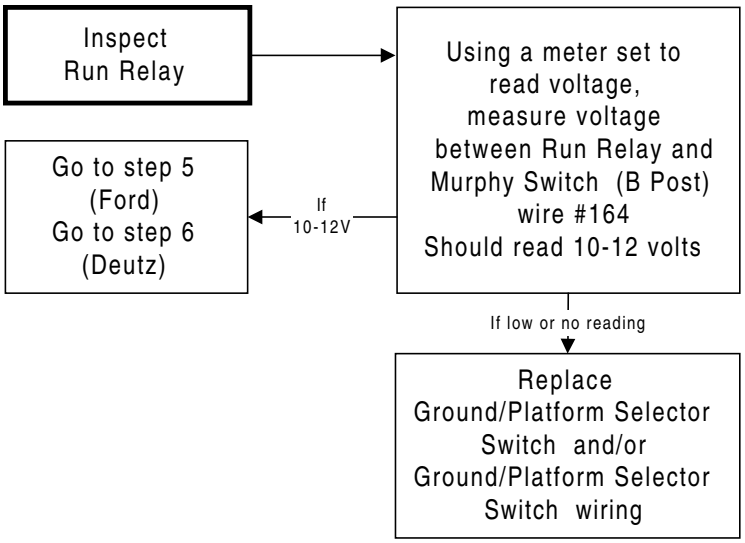
Inspect Run Relay
Using a meter set to read voltage, measure voltage between Run Relay and Murphy Switch (B Post) wire #164 Should read 10-12 volts
Go to step 5 (Ford) Go to step 6 (Deutz)
If 10-12V
If low or no reading
Replace Ground/Platform Selector Switch and/or Ground/Platform Selector Switch wiring

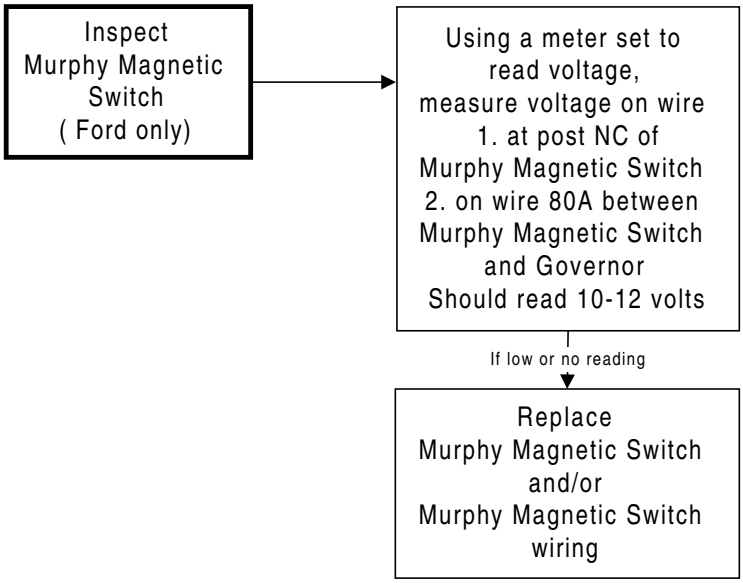
Inspect
Murphy Magnetic
Switch
(Ford only)
Using a meter set to
read voltage,
measure voltage on wire
1. at post NC of
Murphy Magnetic Switch
2. on wire 80A between
Murphy Magnetic Switch
and Governor
Should read 10-12 volts
If low or no reading
Replace
Murphy Magnetic Switch
and/or
Murphy Magnetic Switch
wiring

Step 5

Step 6

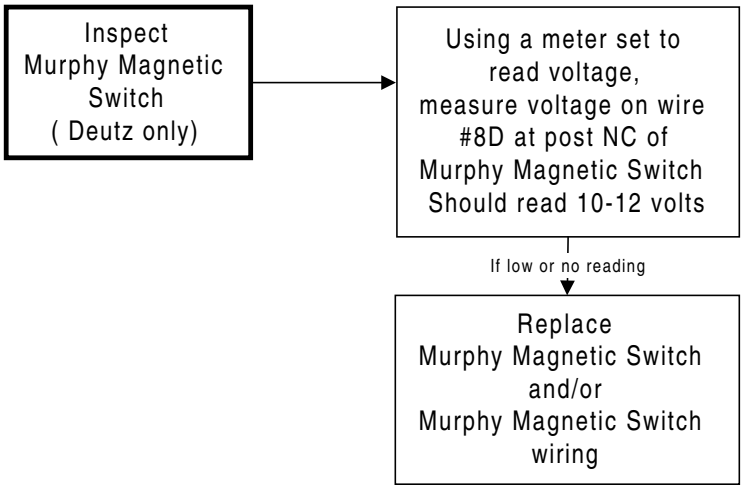
Inspect
Murphy Magnetic
Switch
(Deutz only)
Using a meter set to
read voltage,
measure voltage on wire
#8D at post NC of
Murphy Magnetic Switch
Should read 10-12 volts
If low or no reading
Replace
Murphy Magnetic Switch
and/or
Murphy Magnetic Switch
wiring

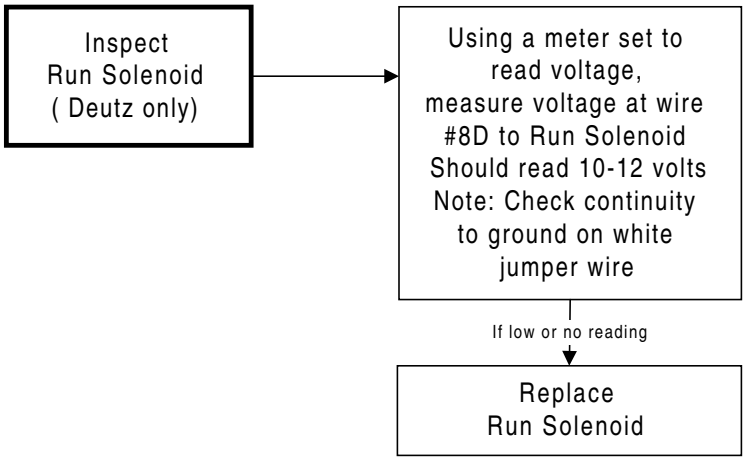
Inspect
Run Solenoid
(Deutz only)
Using a meter set to
read voltage,
measure voltage at wire
#8D to Run Solenoid
Should read 10-12 volts
Note: Check continuity
to ground on white
jumper wire
If low or no reading
Replace
Run Solenoid

Step 7

Engine starts then shuts down after 30 seconds

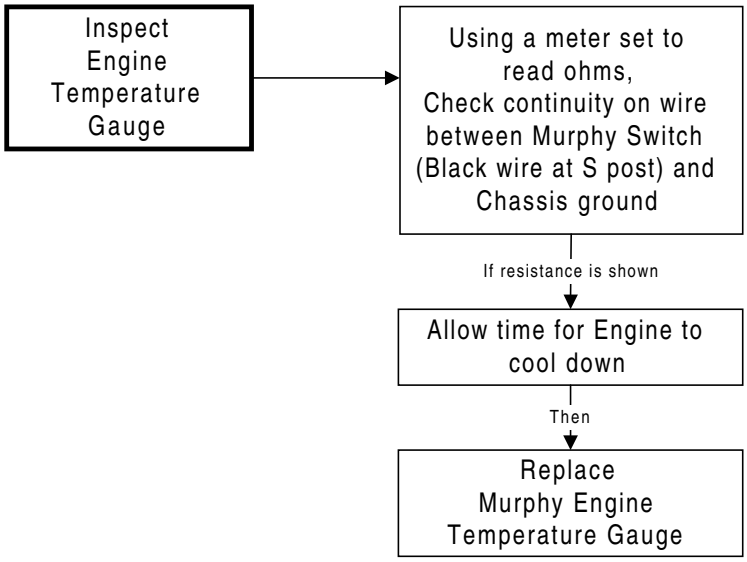

Step 1

Step 2

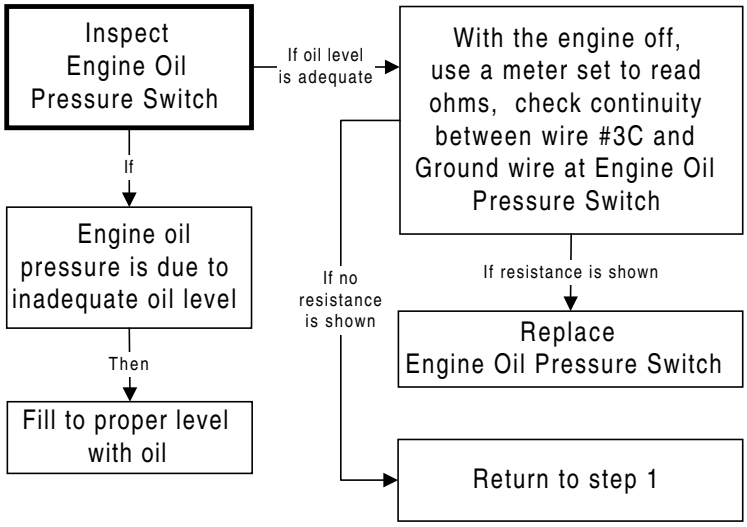

Engine will not accelerate

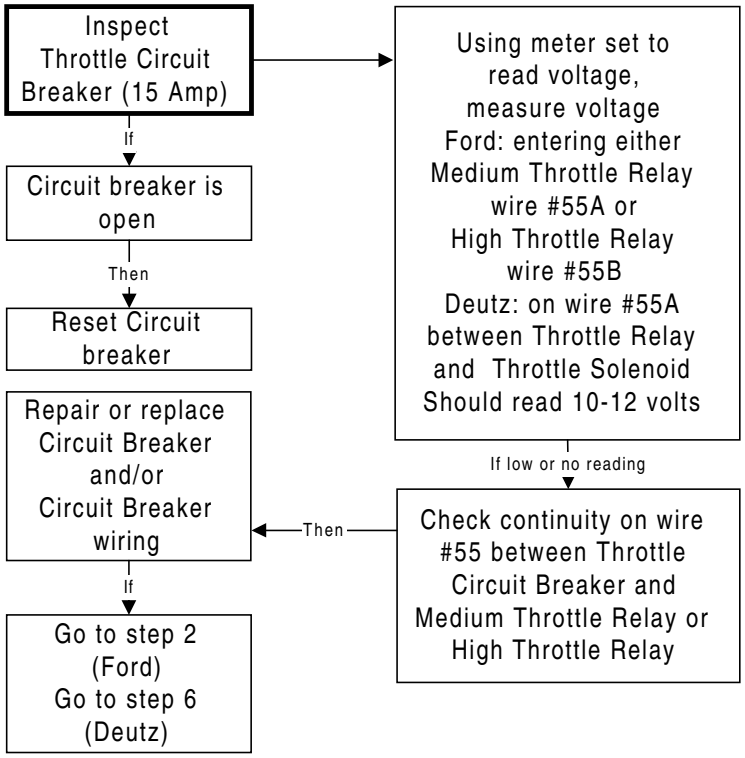

Step 1

Step 2

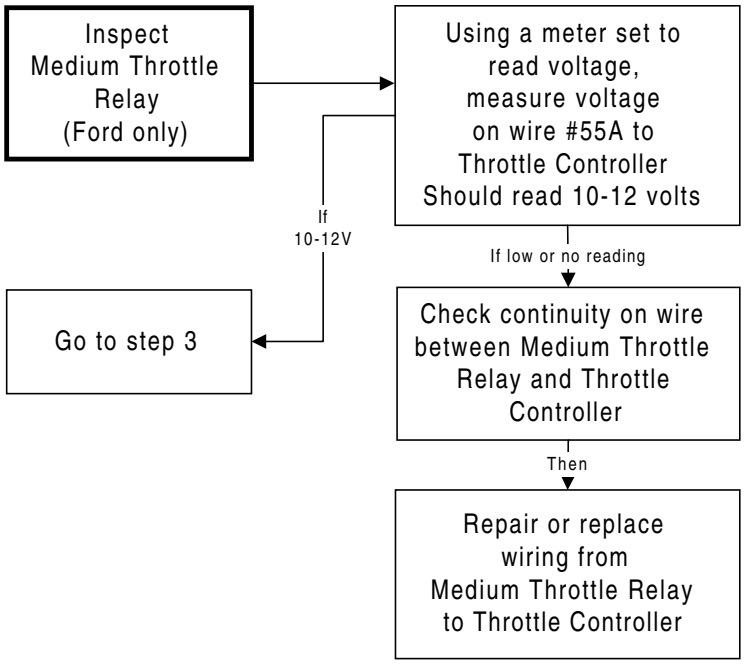

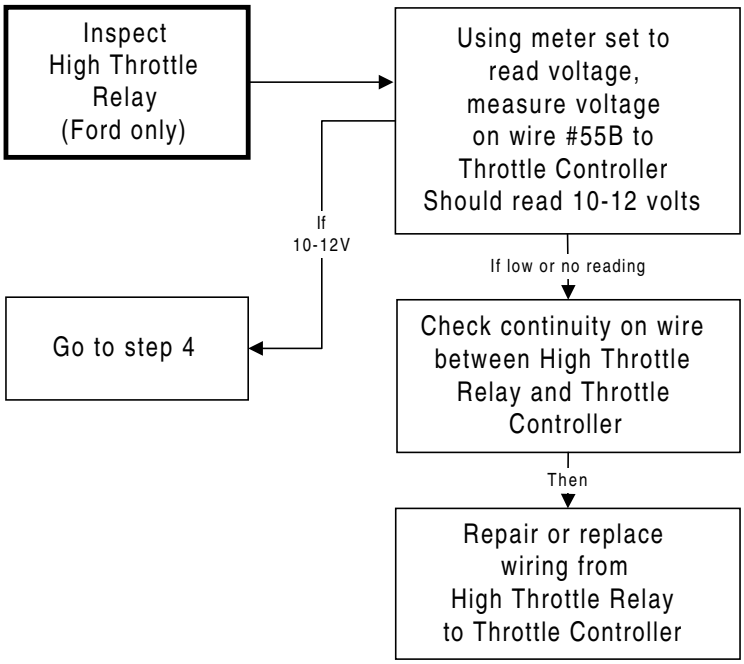
Inspect High Throttle Relay (Ford only)
Using meter set to read voltage, measure voltage on wire #55B to Throttle Controller Should read 10-12 volts
If 10-12V
Go to step 4
If low or no reading
Check continuity on wire between High Throttle Relay and Throttle Controller
Then
Repair or replace wiring from High Throttle Relay to Throttle Controller

Step 3

Step 4

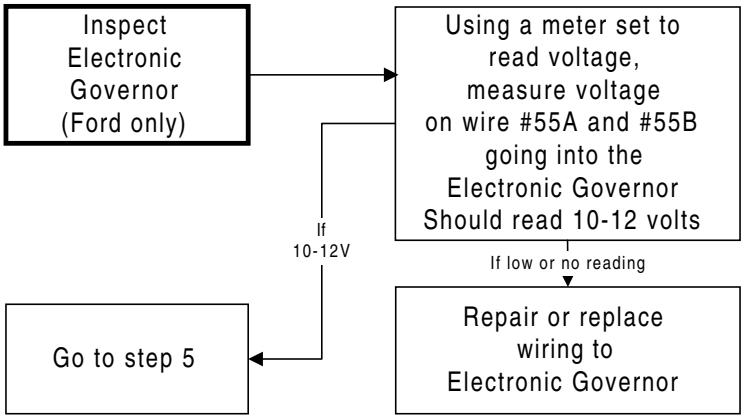
Inspect Electronic Governor (Ford only)
Using a meter set to read voltage, measure voltage on wire #55A and #55B going into the Electronic Governor Should read 10-12 volts
If 10-12V
Go to step 5
If low or no reading
Repair or replace wiring to Electronic Governor

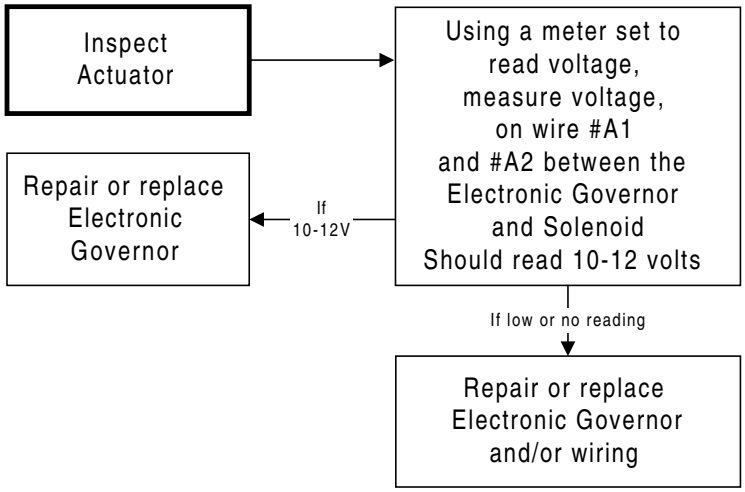
Inspect Actuator
Using a meter set to read voltage, measure voltage, on wire #A1 and #A2 between the Electronic Governor and Solenoid Should read 10-12 volts
If 10-12V
Repair or replace Electronic Governor
If low or no reading
Repair or replace Electronic Governor and/or wiring

Step 5

Step 6

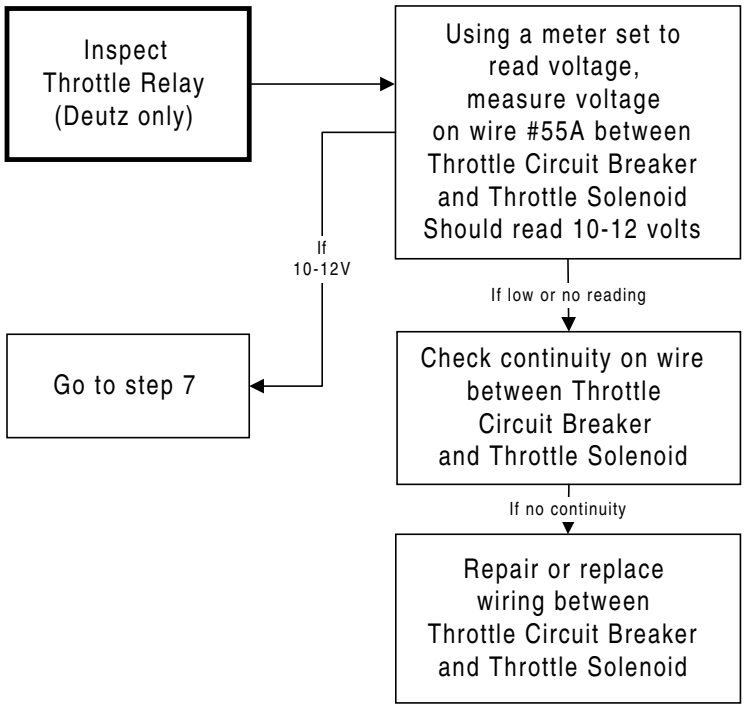
Inspect Throttle Relay (Deutz only)
Using a meter set to read voltage, measure voltage on wire #55A between Throttle Circuit Breaker and Throttle Solenoid Should read 10-12 volts
If 10-12V
Go to step 7
If low or no reading
Check continuity on wire between Throttle Circuit Breaker and Throttle Solenoid
If no continuity
Repair or replace wiring between Throttle Circuit Breaker and Throttle Solenoid

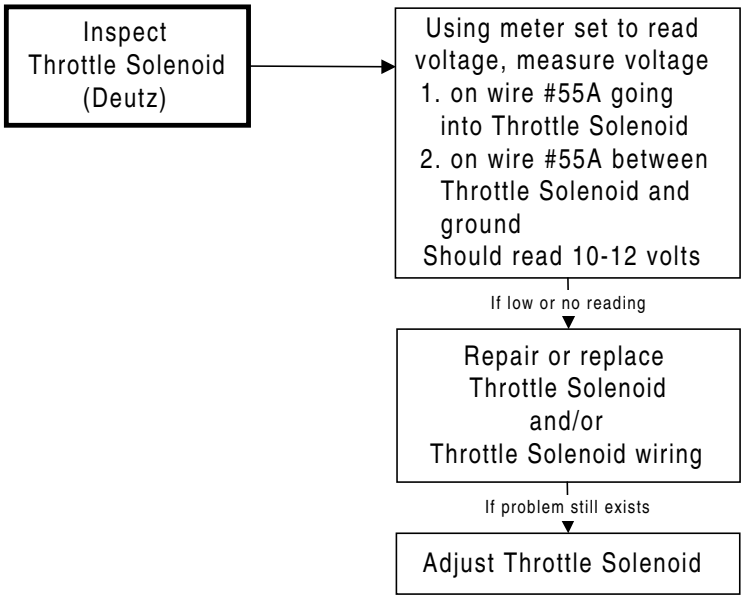
Inspect
Throttle Solenoid
(Deutz)
Using meter set to read voltage, measure voltage
1. on wire #55A going into Throttle Solenoid
2. on wire #55A between Throttle Solenoid and ground
Should read 10-12 volts
If low or no reading
Repair or replace
Throttle Solenoid
and/or
Throttle Solenoid wiring
If problem still exists
Adjust Throttle Solenoid

Step 7

Engine over accelerates

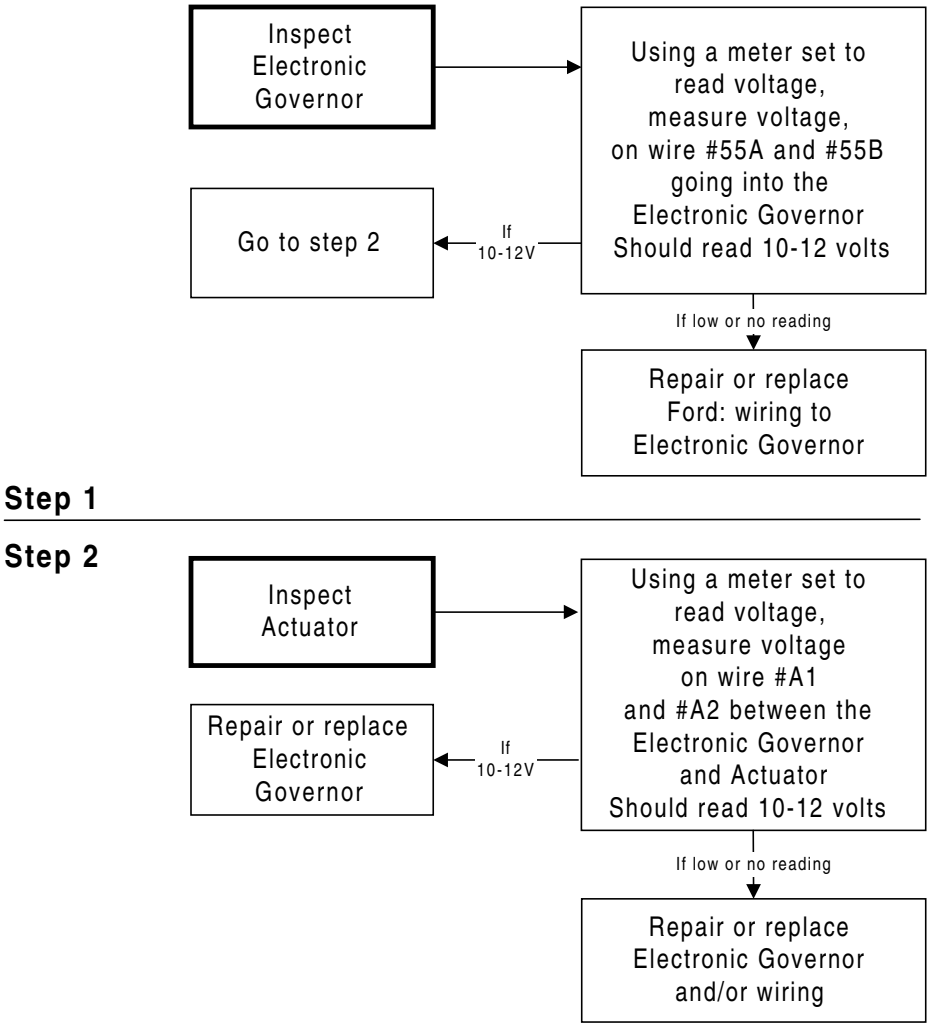

Engine will not start from platform control

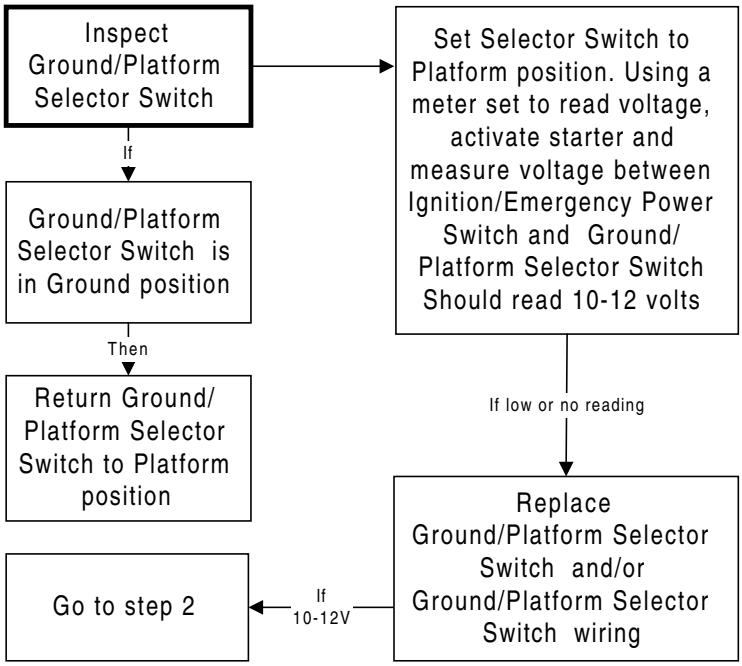

Step 1

Step 2

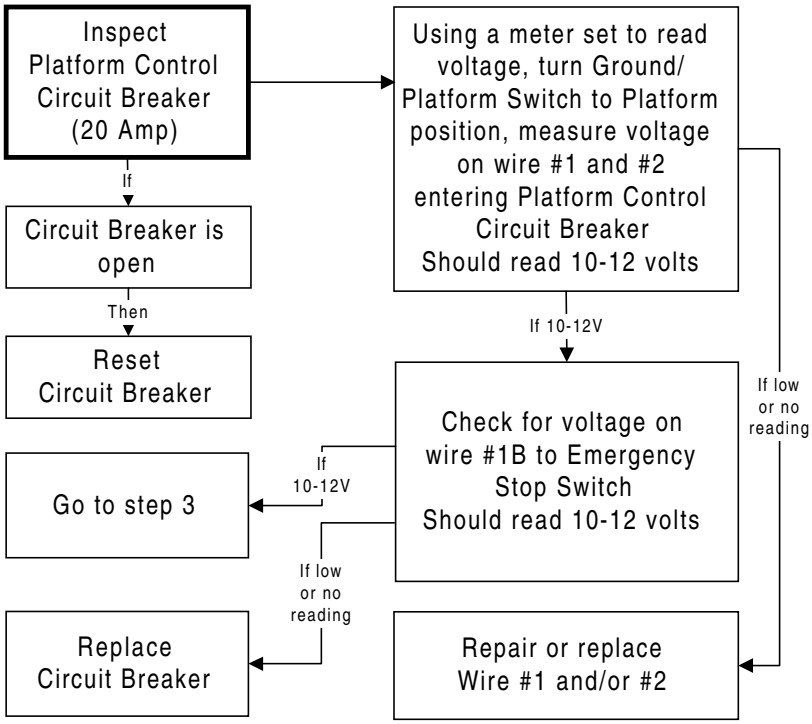

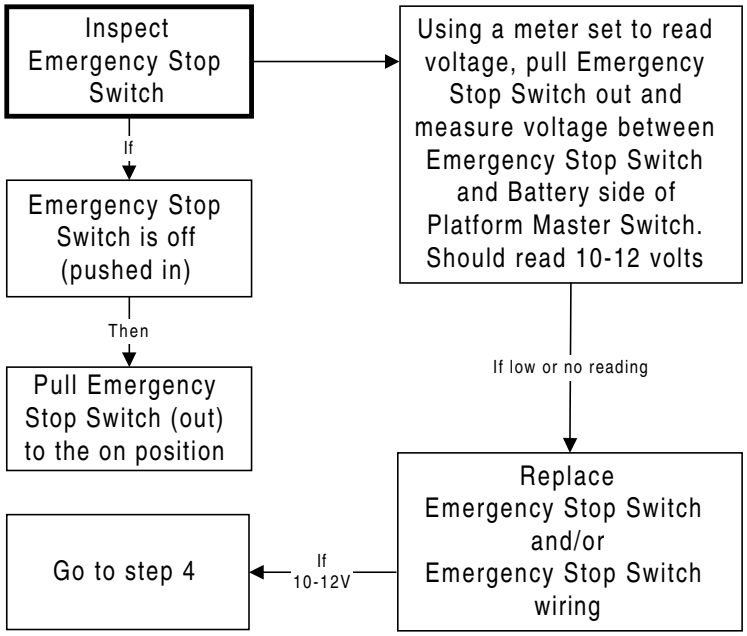
Inspect Emergency Stop Switch
If
Emergency Stop Switch is off (pushed in)
Then
Pull Emergency Stop Switch (out) to the on position
Using a meter set to read voltage, pull Emergency Stop Switch out and measure voltage between Emergency Stop Switch and Battery side of Platform Master Switch. Should read 10-12 volts
If low or no reading
Replace Emergency Stop Switch and/or Emergency Stop Switch wiring
If 10-12V
Go to step 4

Step 3

Step 4

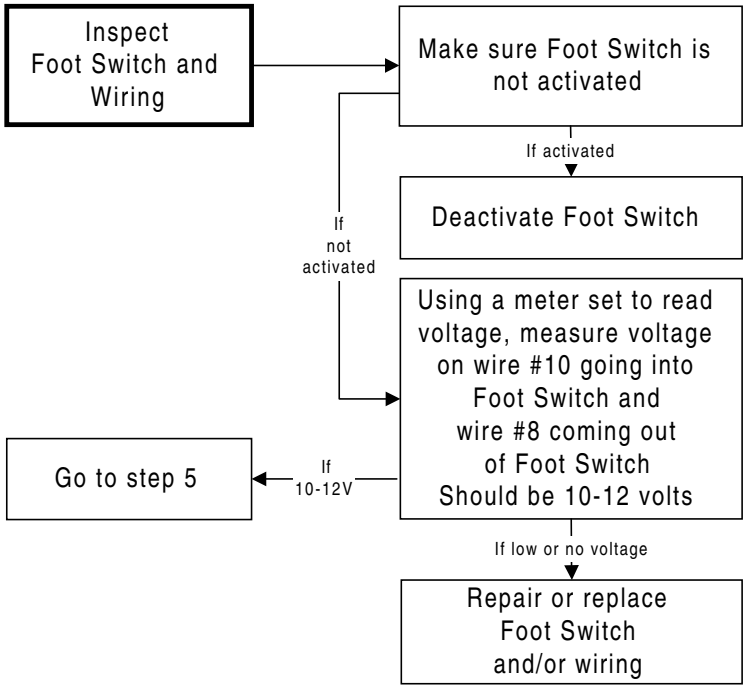
Inspect Foot Switch and Wiring
Make sure Foot Switch is not activated
If activated
Deactivate Foot Switch
If not activated
Using a meter set to read voltage, measure voltage on wire #10 going into Foot Switch and wire #8 coming out of Foot Switch Should be 10-12 volts
If 10-12V
Go to step 5
If low or no voltage
Repair or replace Foot Switch and/or wiring

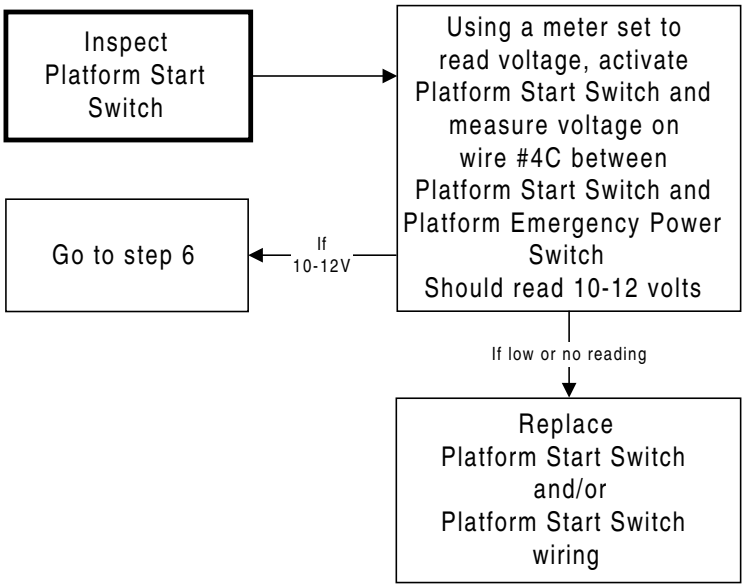
Inspect Platform Start Switch
Using a meter set to read voltage, activate Platform Start Switch and measure voltage on wire #4C between Platform Start Switch and Platform Emergency Power Switch Should read 10-12 volts
Go to step 6
If 10-12V
If low or no reading
Replace Platform Start Switch and/or Platform Start Switch wiring

Step 5

Step 6

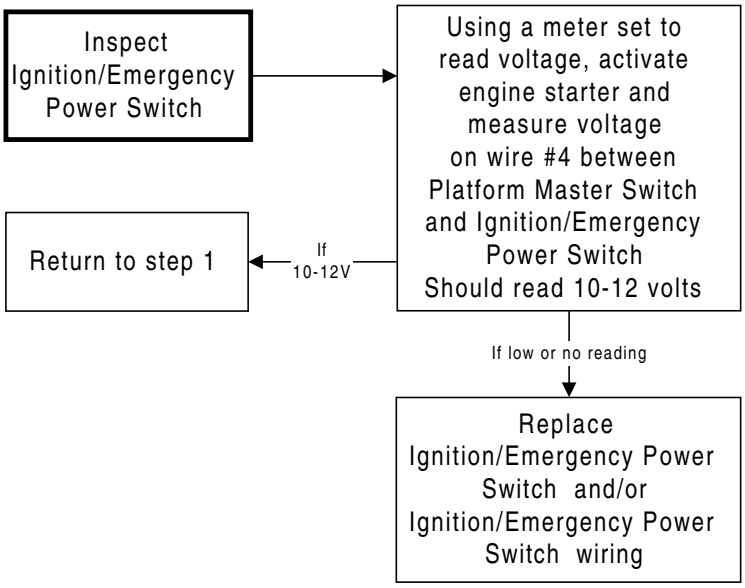
Inspect Ignition/Emergency Power Switch
Using a meter set to read voltage, activate engine starter and measure voltage on wire #4 between Platform Master Switch and Ignition/Emergency Power Switch Should read 10-12 volts
Return to step 1
If 10-12V
If low or no reading
Replace Ignition/Emergency Power Switch and/or Ignition/Emergency Power Switch wiring

Engine starts while cranking, then dies when key switch is released

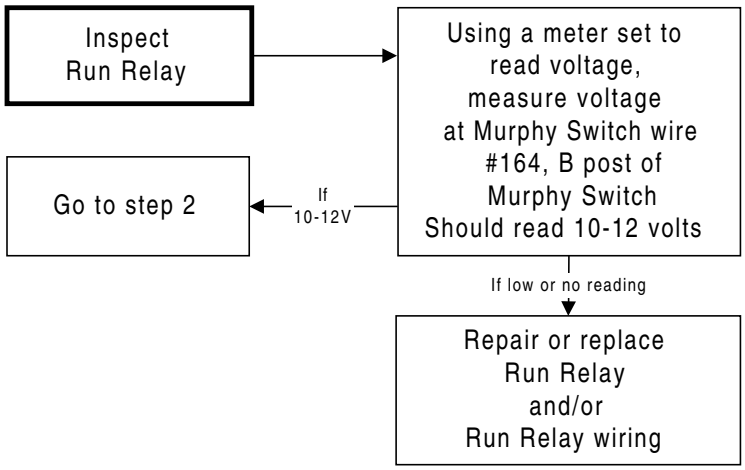

Step 1

Step 2

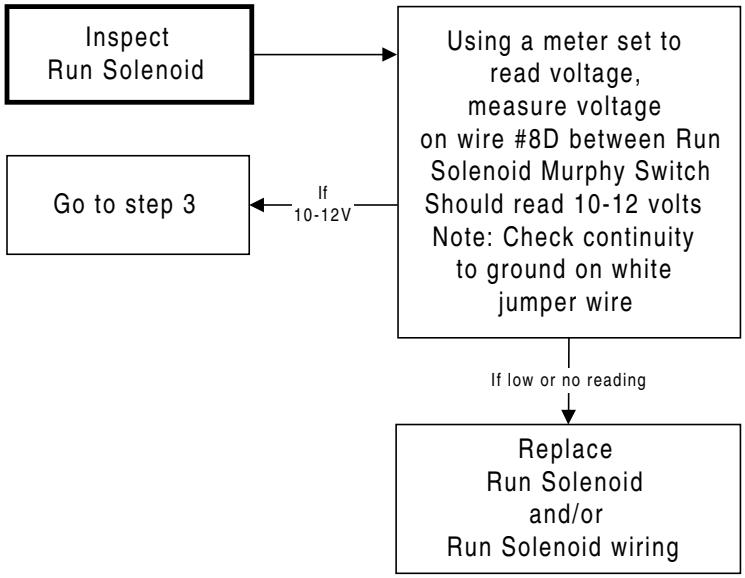

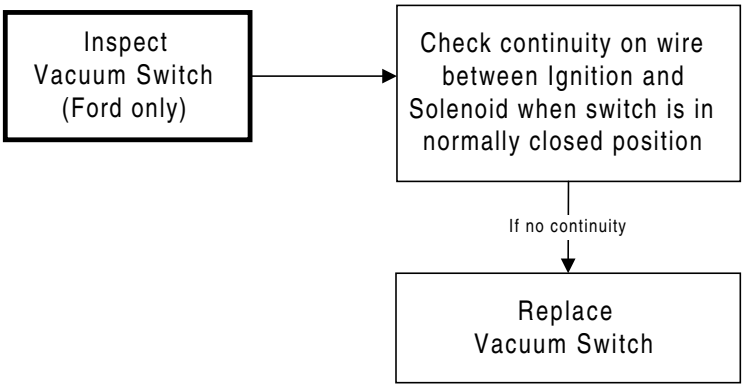
Inspect
Vacuum Switch
(Ford only)
Check continuity on wire between Ignition and Solenoid when switch is in normally closed position
If no continuity
Replace
Vacuum Switch

Step 3

SECTION TWO:
HYDRAULIC DIAGNOSTICS

Chart 1

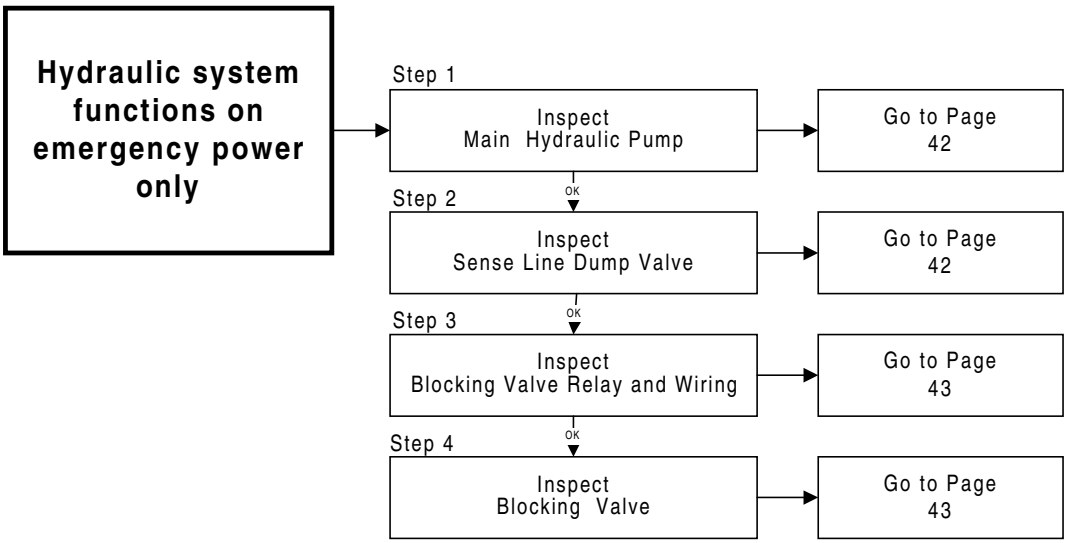

Chart 2

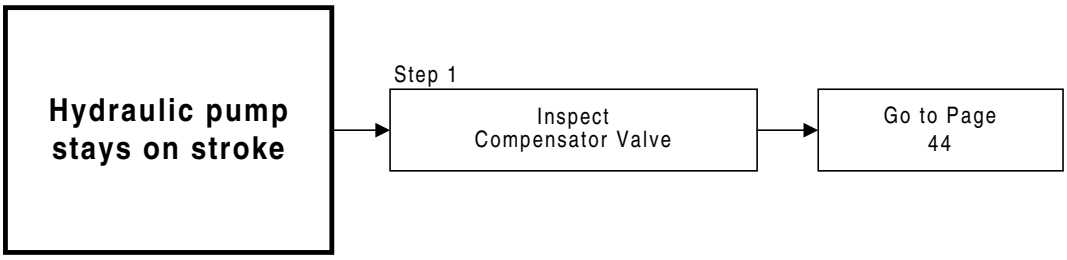

Chart 3

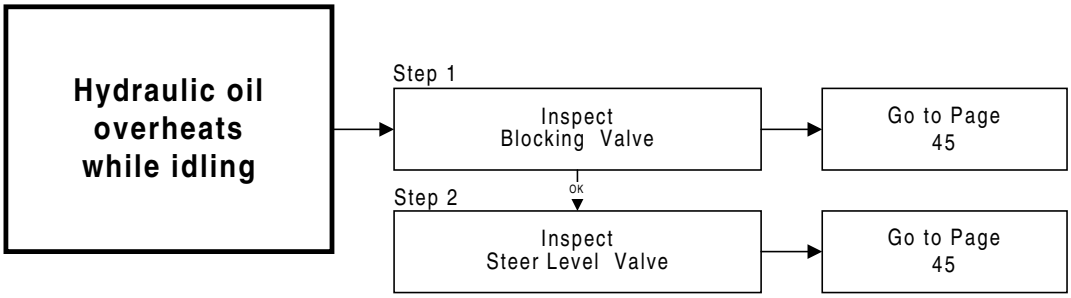

Chart 4

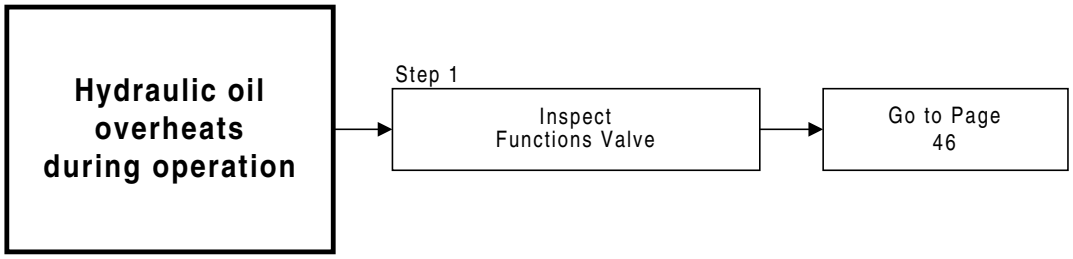

Chart 5

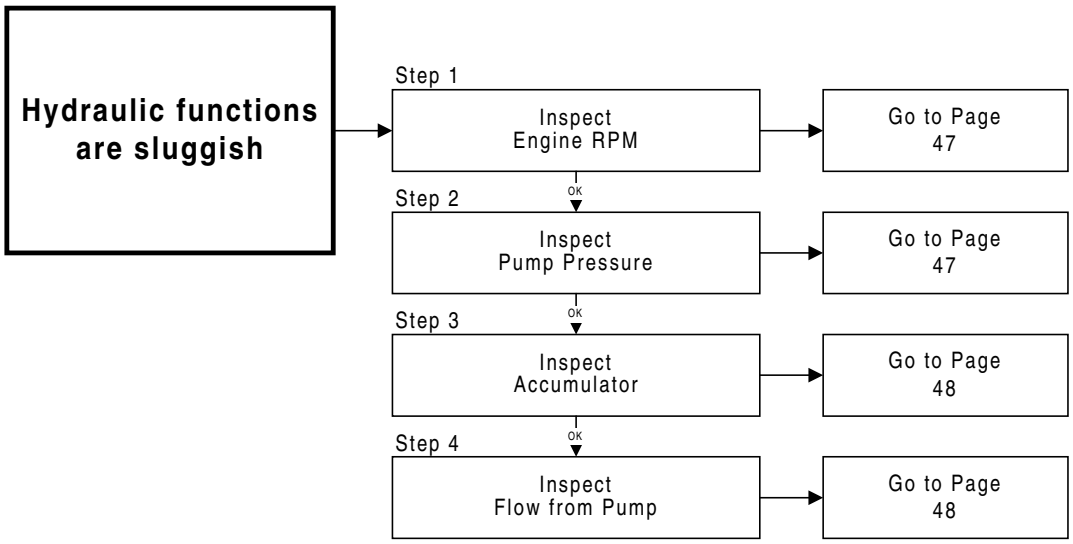

Chart 6

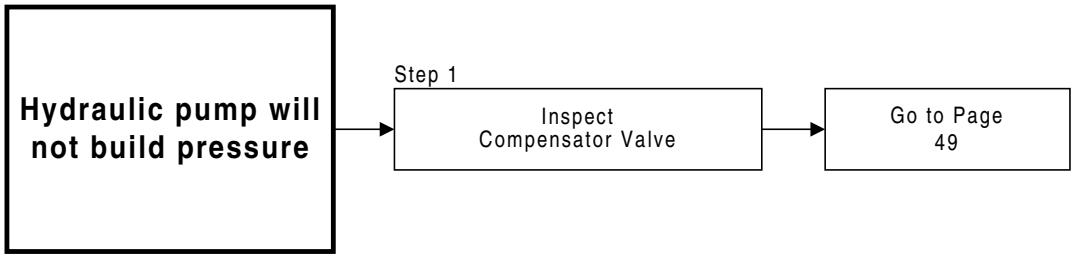

Chart 7

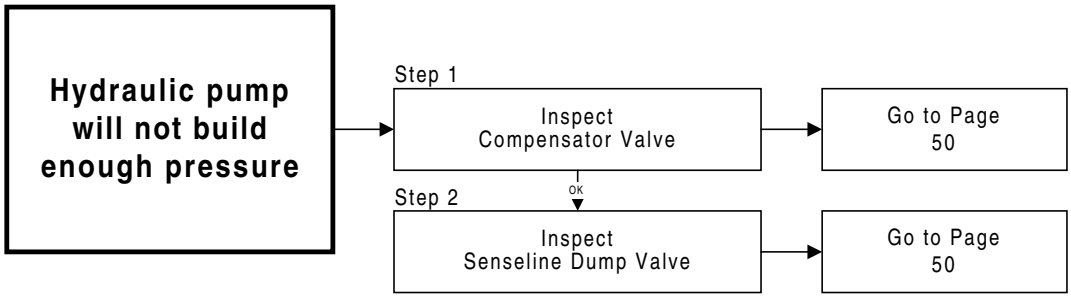

Chart 8

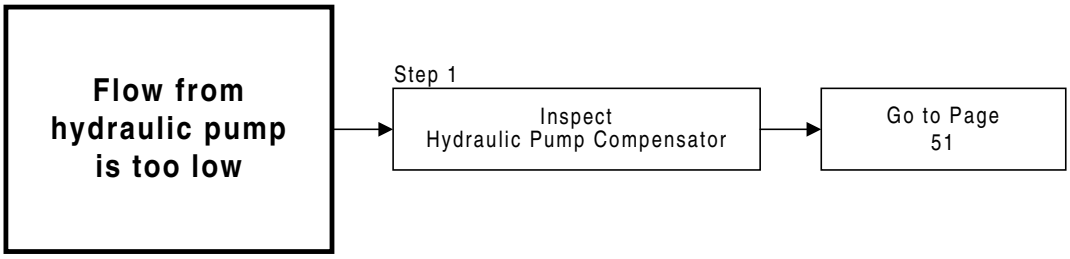

Chart 9

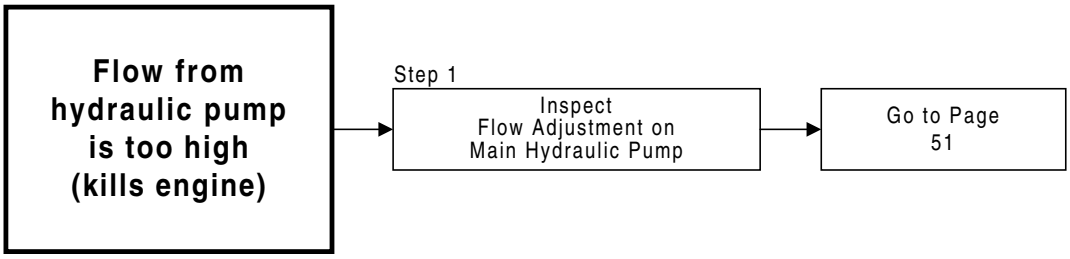

Hydraulic system functions on emergency power only

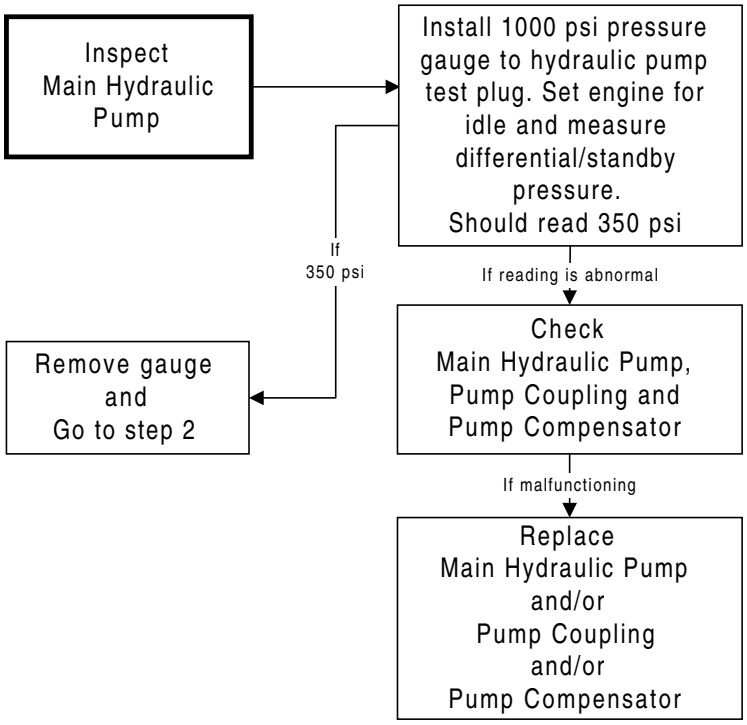

Step 1

Step 2

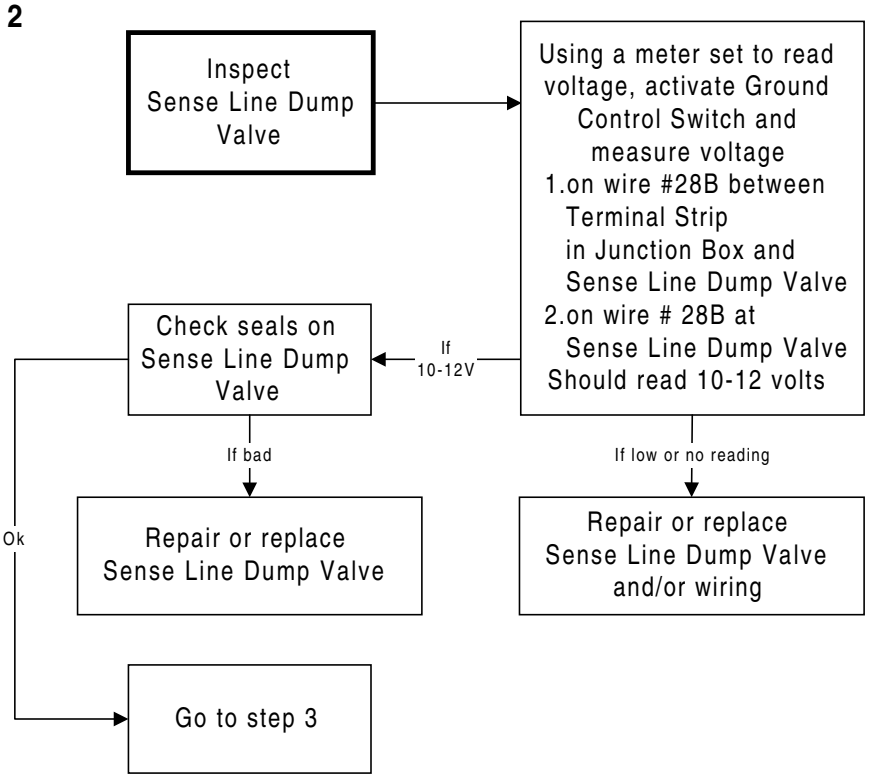

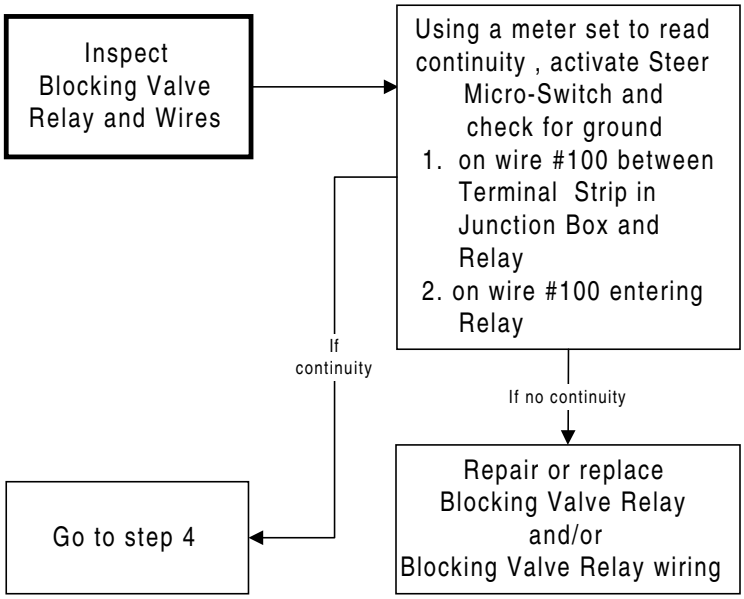
Inspect
Blocking Valve
Relay and Wires
Using a meter set to read continuity , activate Steer Micro-Switch and check for ground
1. on wire #100 between Terminal Strip in Junction Box and Relay
2. on wire #100 entering Relay
If continuity
If no continuity
Go to step 4
Repair or replace Blocking Valve Relay and/or Blocking Valve Relay wiring

Step 3

Step 4

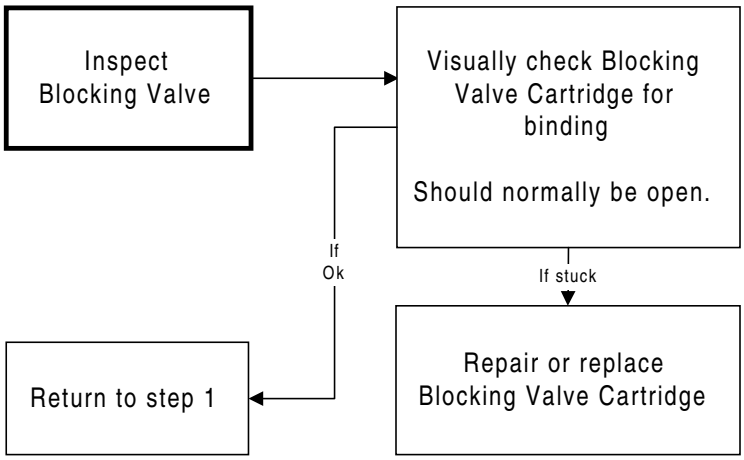
Inspect
Blocking Valve
Visually check Blocking Valve Cartridge for binding
Should normally be open.
If Ok
If stuck
Return to step 1
Repair or replace Blocking Valve Cartridge

Hydraulic pump stays on stroke

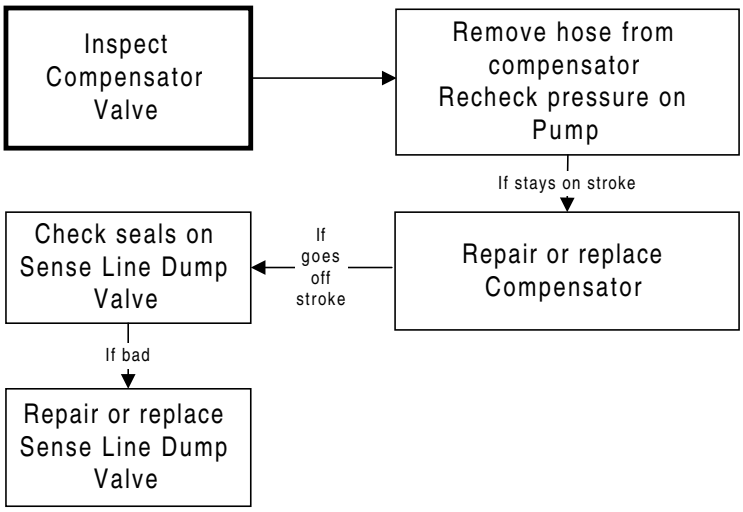

Step 1

Hydraulic oil overheats while idling

⚠CAUTION

Machine function will be moving when manual override is activated.

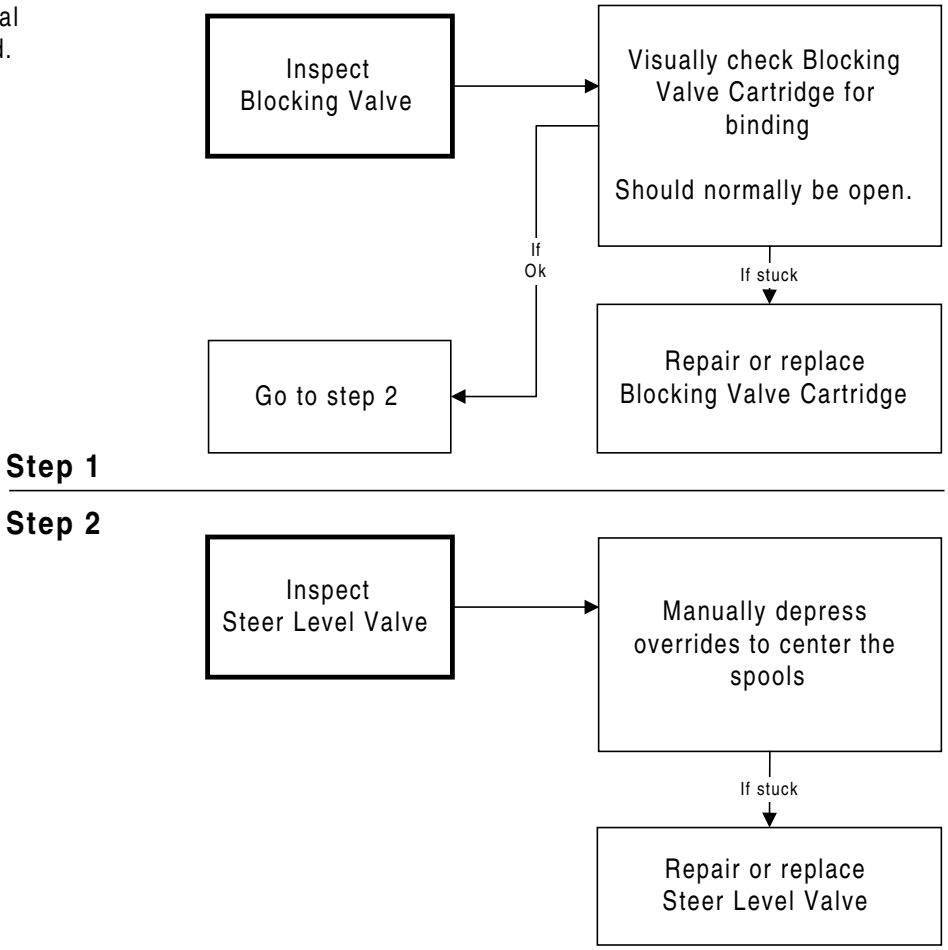

Hydraulic oil overheats during operation

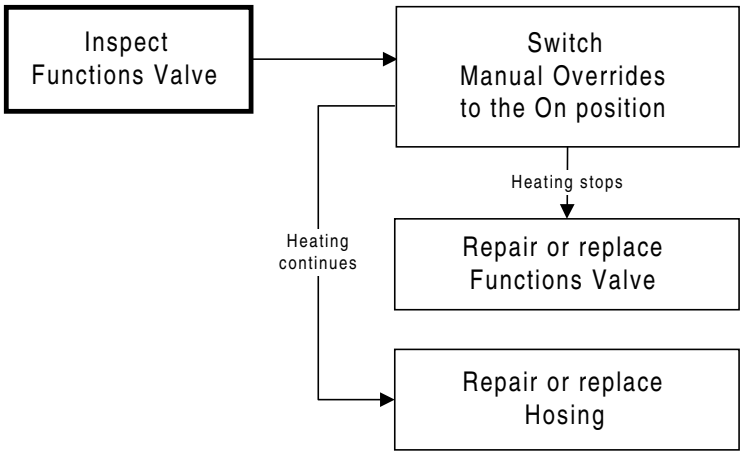

Step 1

Hydraulic functions are sluggish

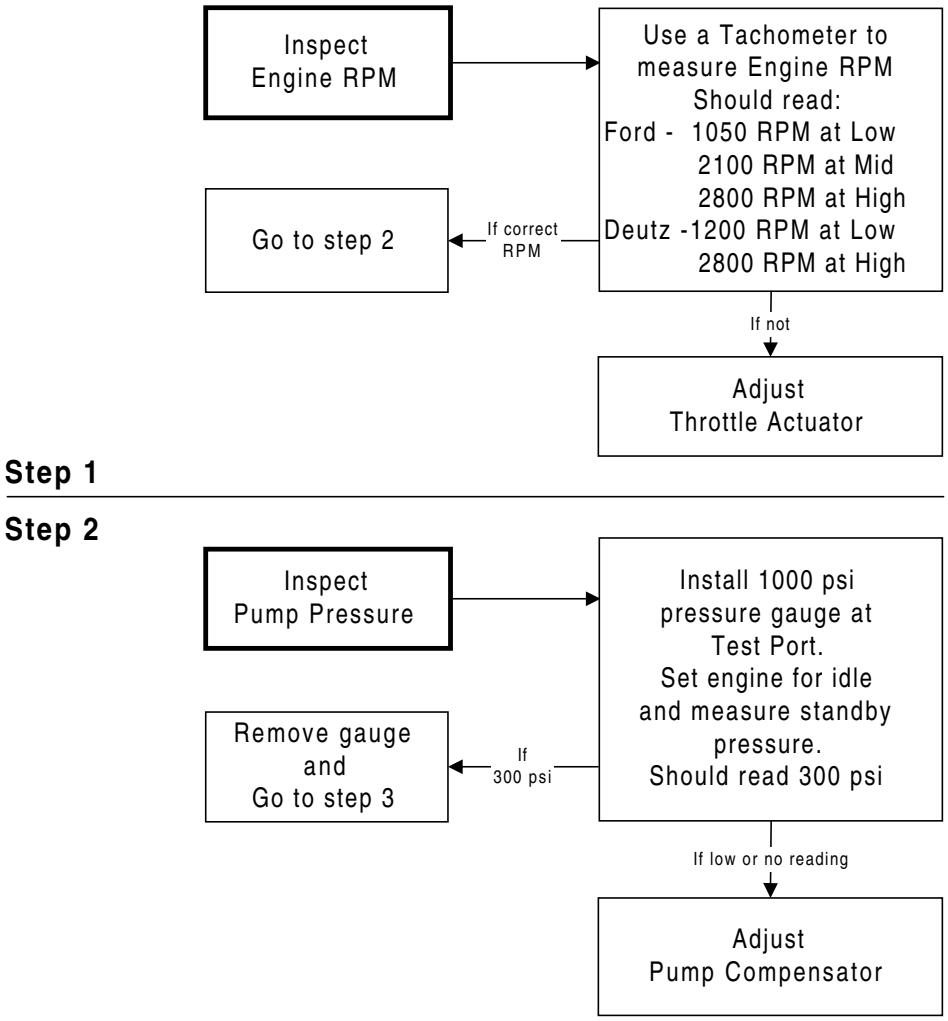

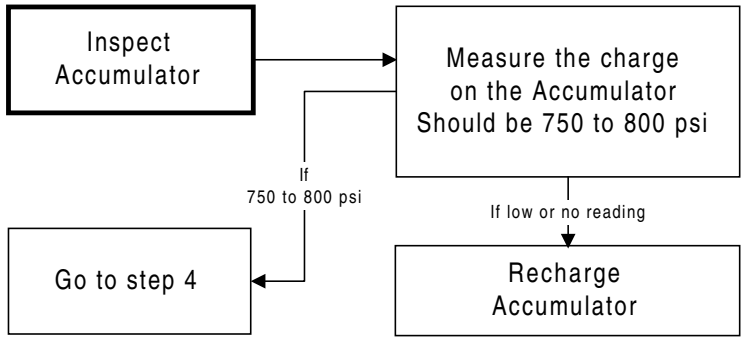
Inspect Accumulator
Measure the charge on the Accumulator Should be 750 to 800 psi
If 750 to 800 psi
If low or no reading
Go to step 4
Recharge Accumulator

Step 3

Step 4

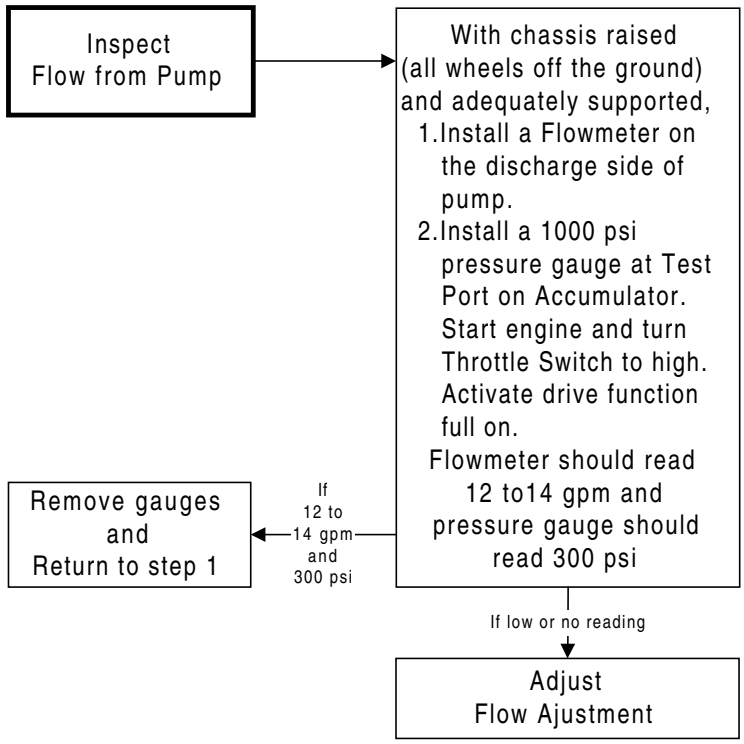
Inspect Flow from Pump
With chassis raised (all wheels off the ground) and adequately supported,
1.Install a Flowmeter on the discharge side of pump.
2.Install a 1000 psi pressure gauge at Test Port on Accumulator. Start engine and turn Throttle Switch to high. Activate drive function full on.
Flowmeter should read 12 to14 gpm and pressure gauge should read 300 psi
Remove gauges and Return to step 1
If 12 to 14 gpm and 300 psi
If low or no reading
Adjust Flow Ajustment

Hydraulic pump will not build pressure

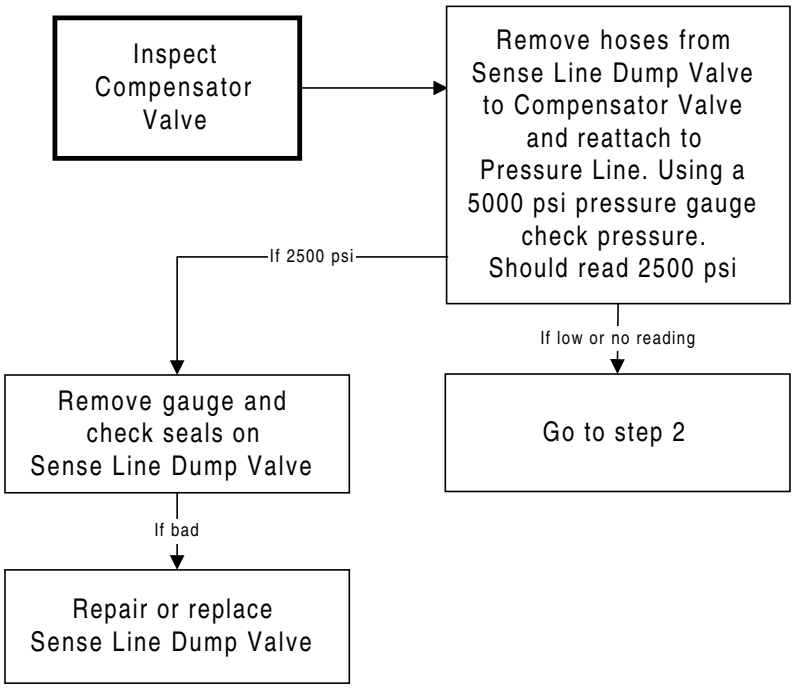

Step 1

Step 2

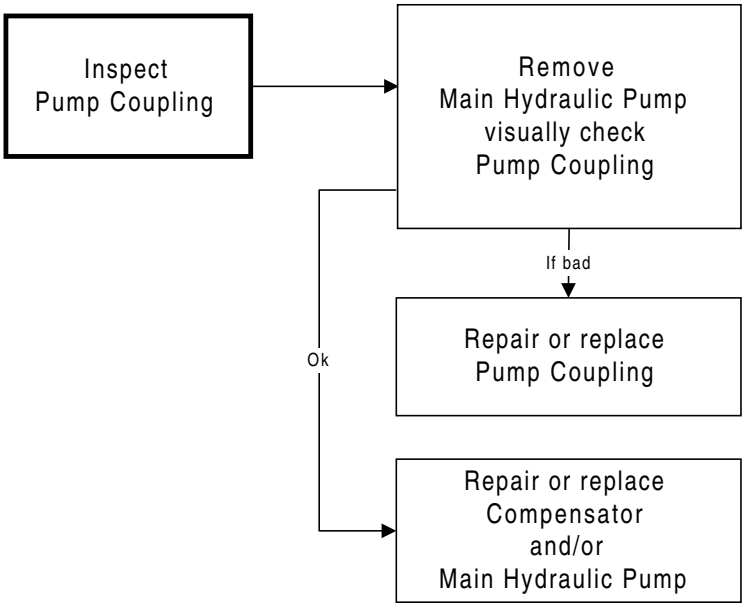

Hydraulic pump will not build enough pressure

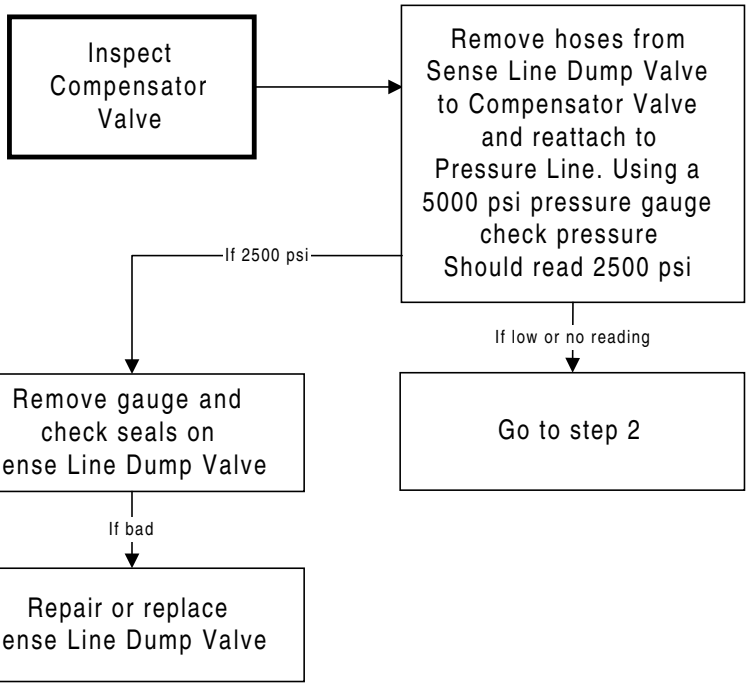

Step 1

Step 2

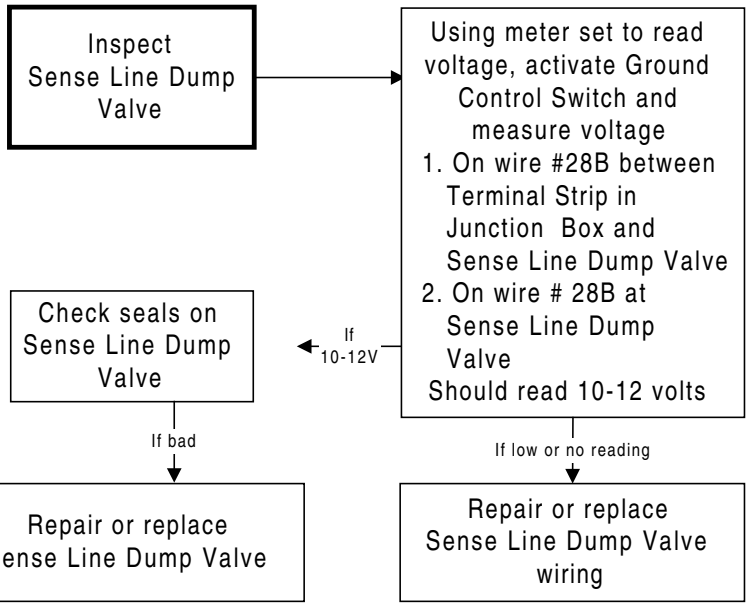

Flow from hydraulic pump is too low

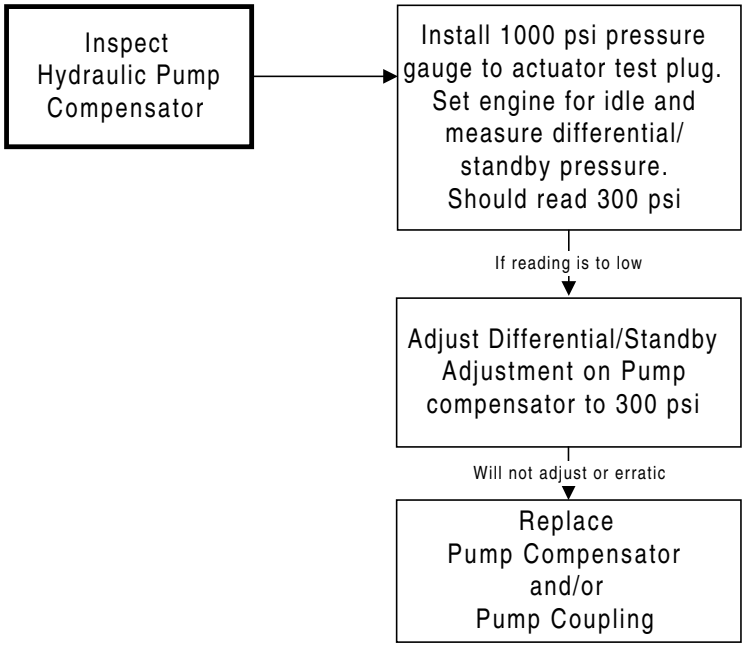

Step 1

Step 1

Flow from hydraulic pump is too high (kills engine)

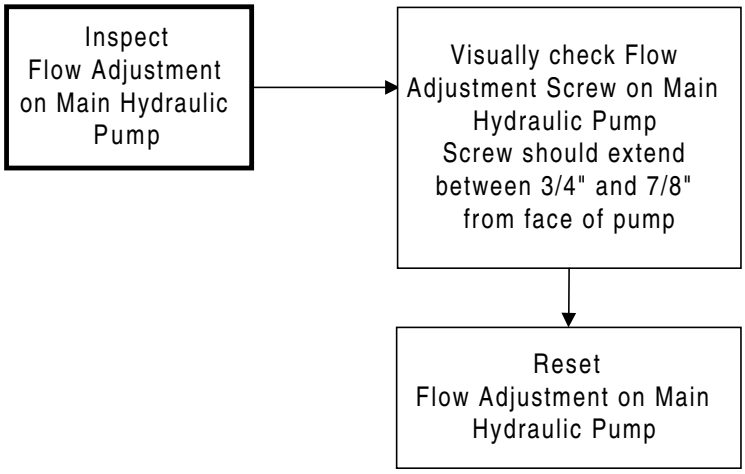

SECTION THREE:
STEERING SYSTEM DIAGNOSTICS

Chart 1

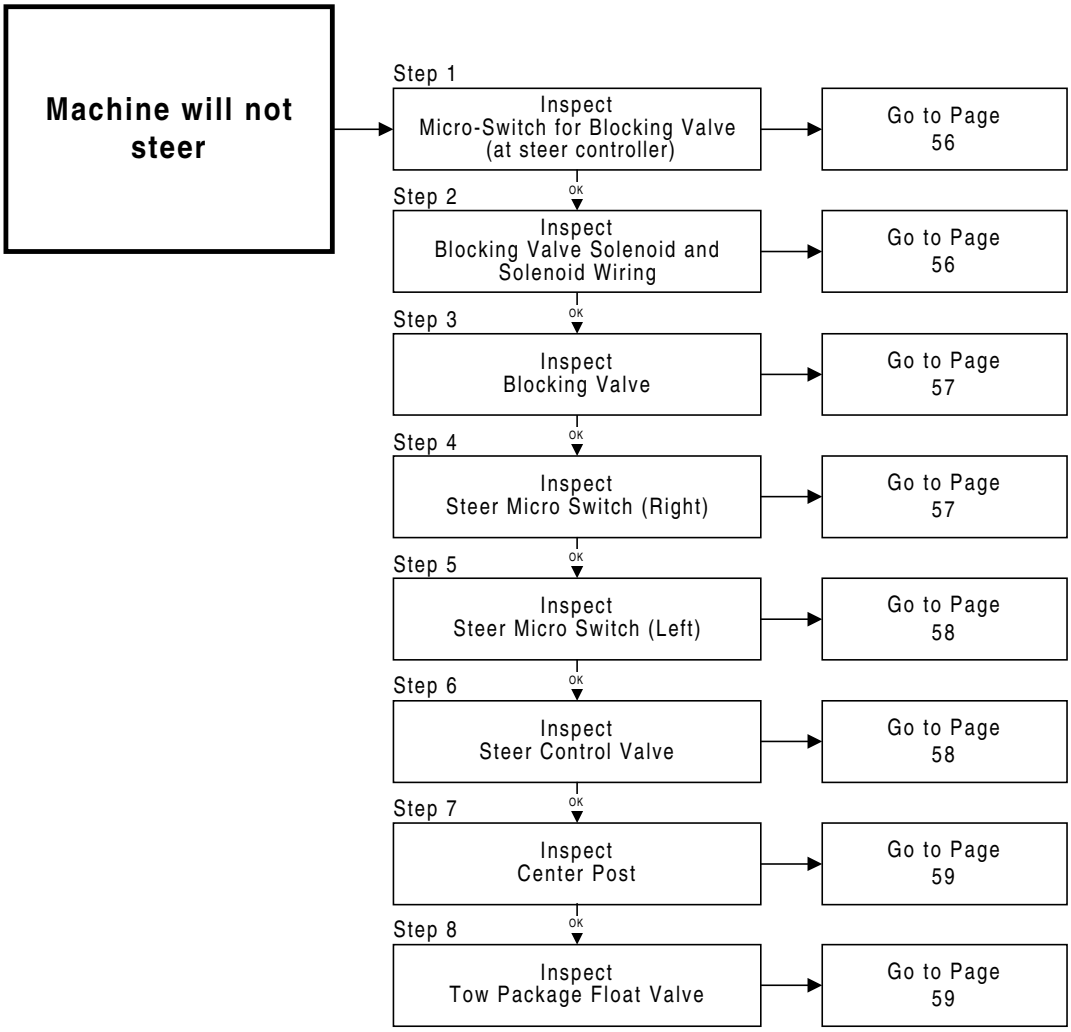
Machine will not steer
Step 1
Inspect Micro-Switch for Blocking Valve (at steer controller)
Go to Page 56
OK
Step 2
Inspect Blocking Valve Solenoid and Solenoid Wiring
Go to Page 56
OK
Step 3
Inspect Blocking Valve
Go to Page 57
OK
Step 4
Inspect Steer Micro Switch (Right)
Go to Page 57
OK
Step 5
Inspect Steer Micro Switch (Left)
Go to Page 58
OK
Step 6
Inspect Steer Control Valve
Go to Page 58
OK
Step 7
Inspect Center Post
Go to Page 59
OK
Step 8
Inspect Tow Package Float Valve
Go to Page 59

Machine will not steer

Note:
At this point the manual override may also be use to isolate the solenoid, however use caution as the machine will be moving.

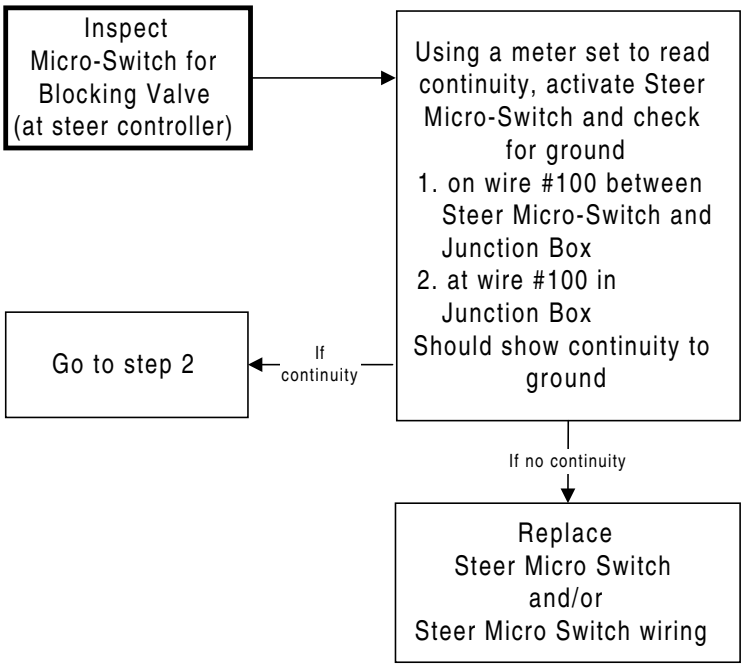

Step 1

Step 2

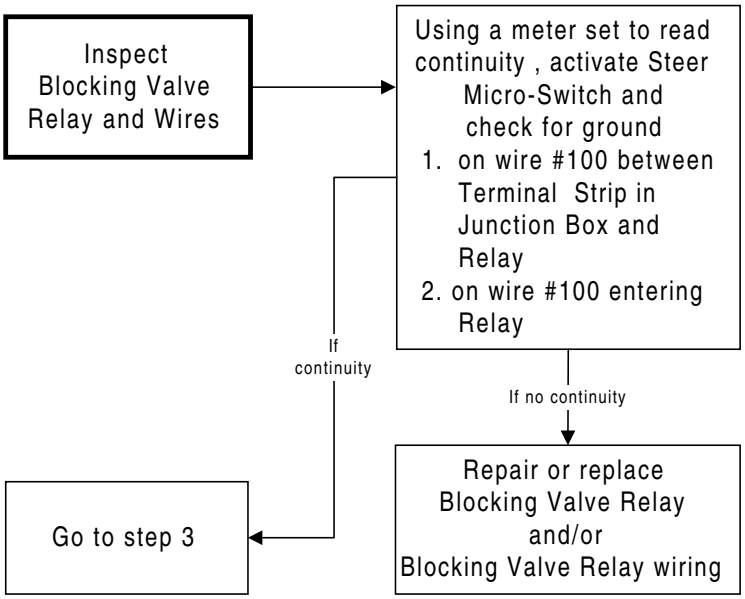

Note:
At this point the manual override may also be use to isolate the solenoid, however use caution as the machine will be moving.

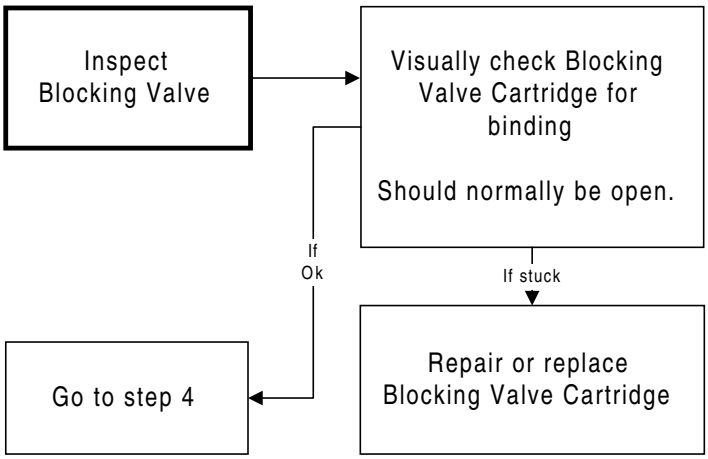

Step 3

Step 4

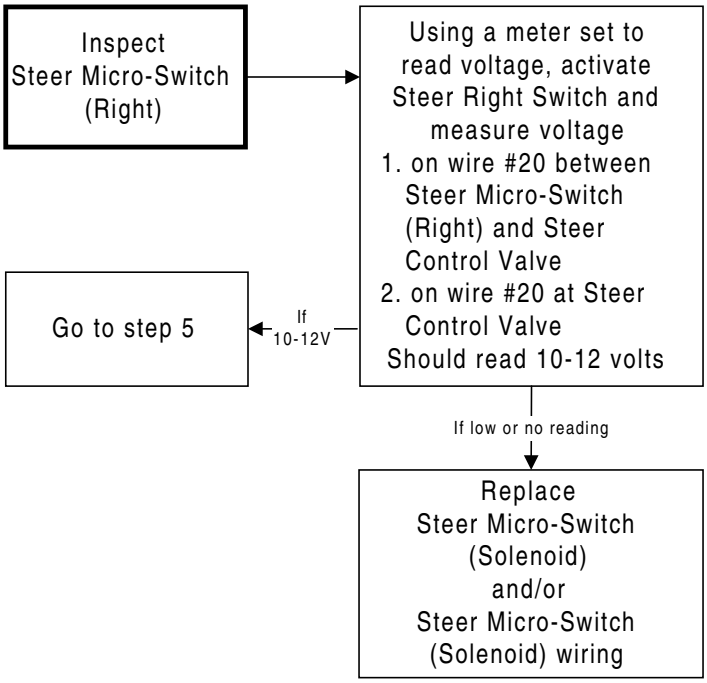

⚠CAUTION
During activation of steering function the machine will be moving.

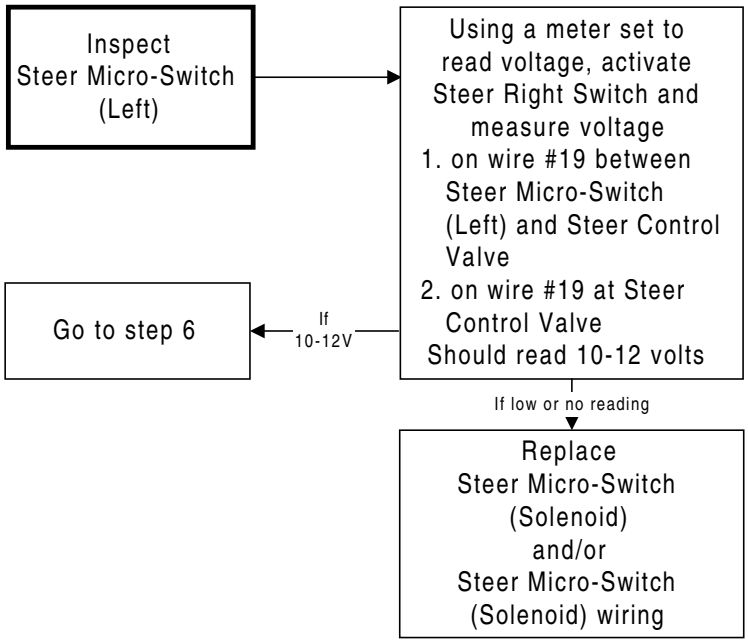

Step 5

Step 6

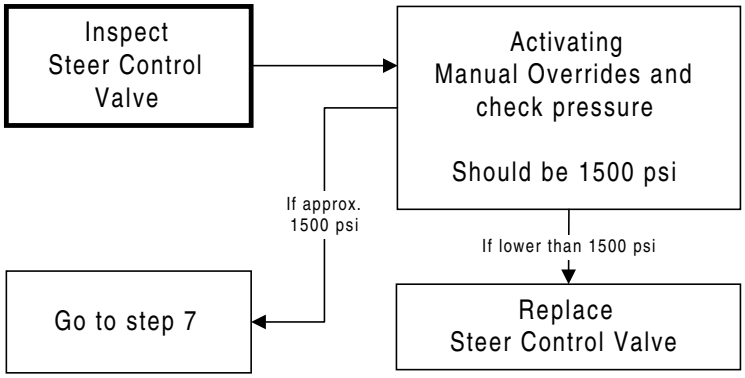

⚠CAUTION

During activation of steering function the machine will be moving.

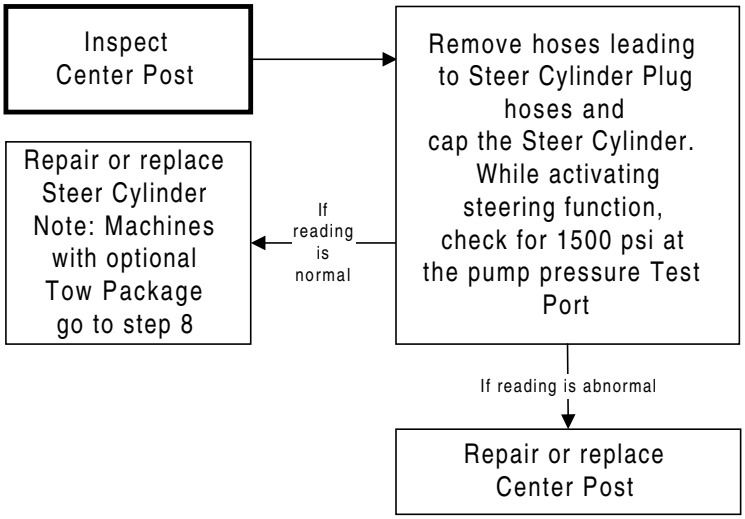

Step 7

Step 8

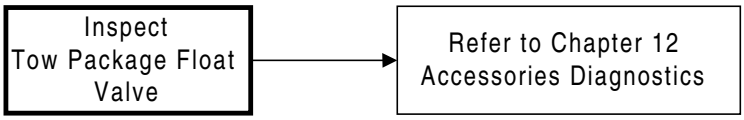

SECTION FOUR:
DRIVE SYSTEM DIAGNOSTICS

Chart 1

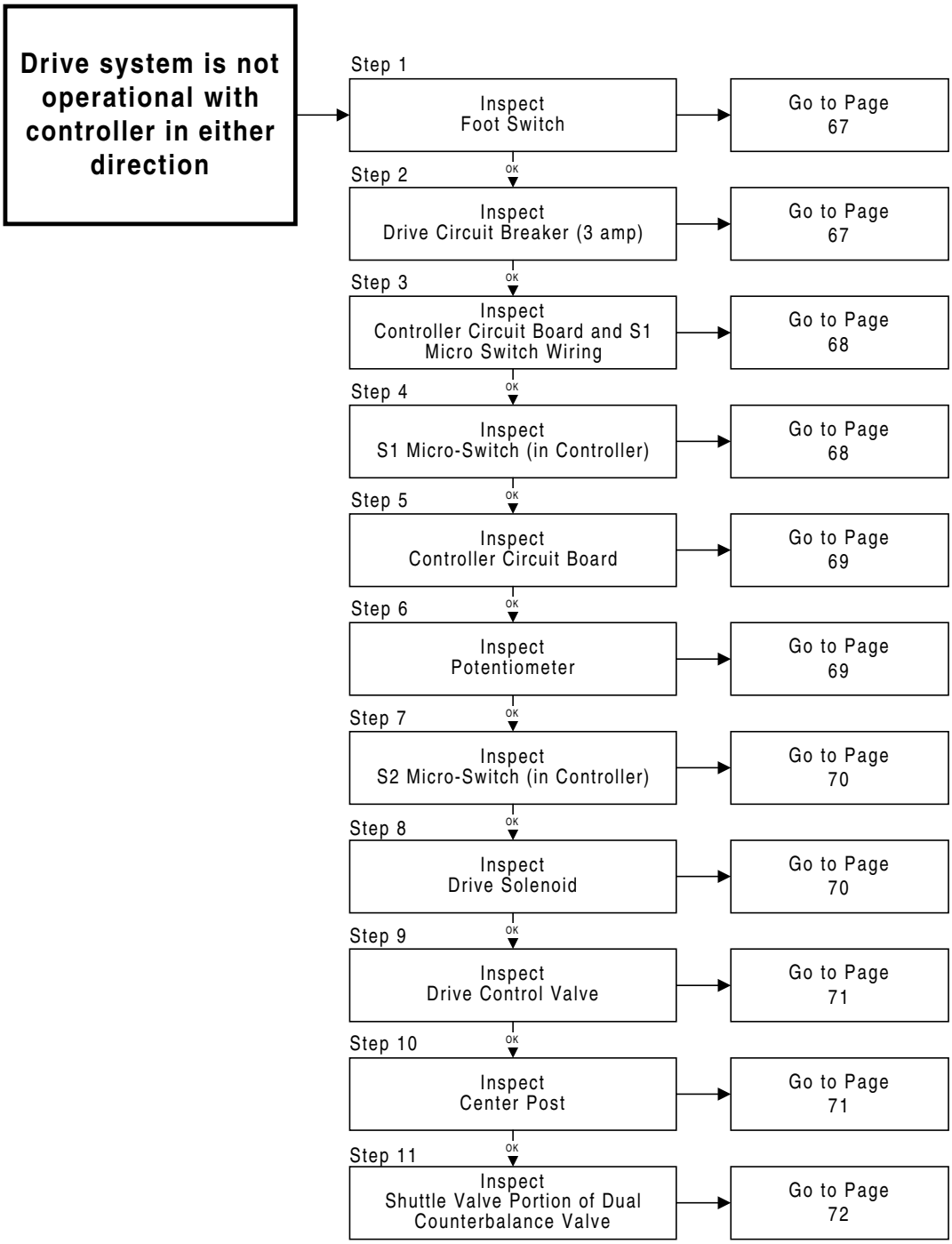
Drive system is not operational with controller in either direction
Step 1
Inspect Foot Switch
Go to Page 67
OK
Step 2
Inspect Drive Circuit Breaker (3 amp)
Go to Page 67
OK
Step 3
Inspect Controller Circuit Board and S1 Micro Switch Wiring
Go to Page 68
OK
Step 4
Inspect S1 Micro-Switch (in Controller)
Go to Page 68
OK
Step 5
Inspect Controller Circuit Board
Go to Page 69
OK
Step 6
Inspect Potentiometer
Go to Page 69
OK
Step 7
Inspect S2 Micro-Switch (in Controller)
Go to Page 70
OK
Step 8
Inspect Drive Solenoid
Go to Page 70
OK
Step 9
Inspect Drive Control Valve
Go to Page 71
OK
Step 10
Inspect Center Post
Go to Page 71
OK
Step 11
Inspect Shuttle Valve Portion of Dual Counterbalance Valve
Go to Page 72

Chart 2

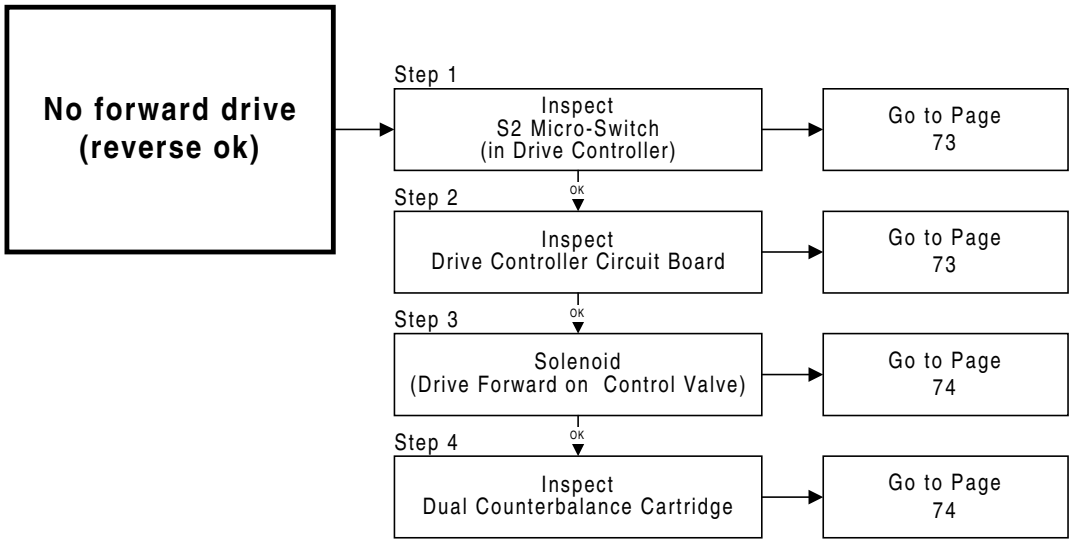

Chart 3

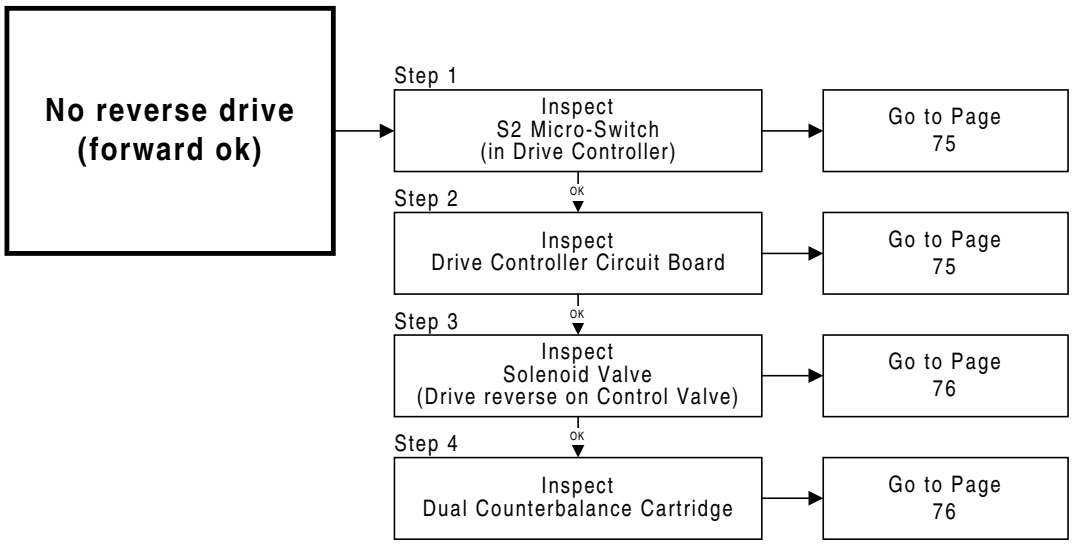

Chart 4

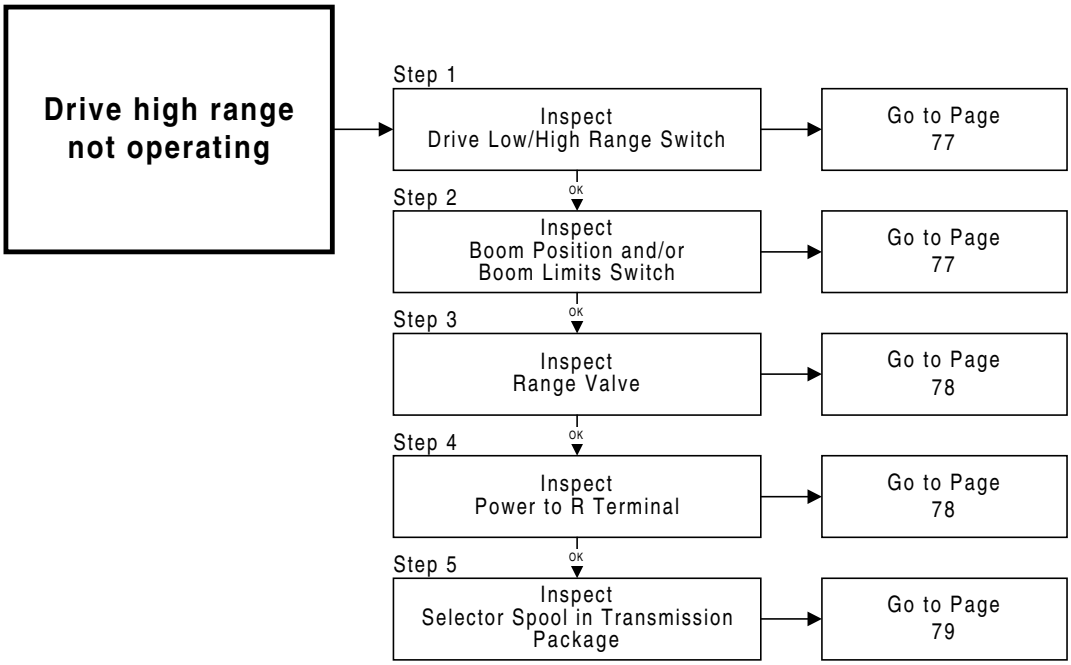

Chart 5

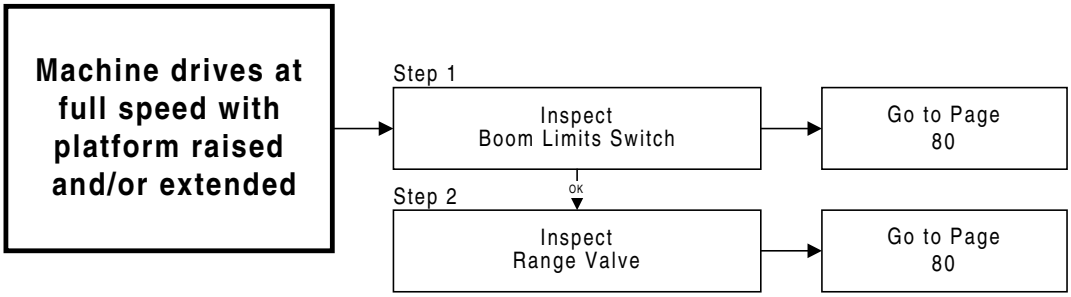

Chart 6

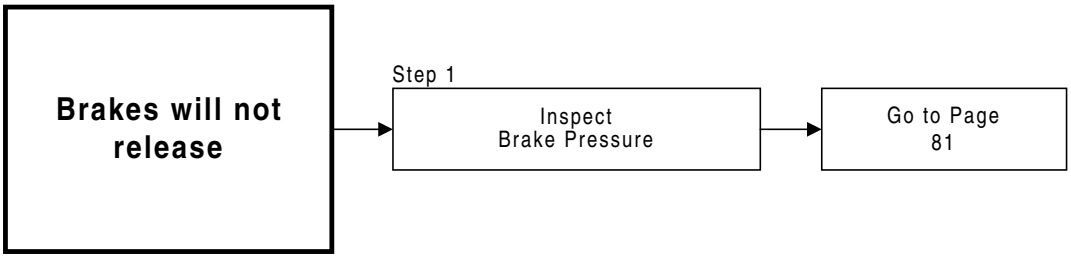

Chart 7

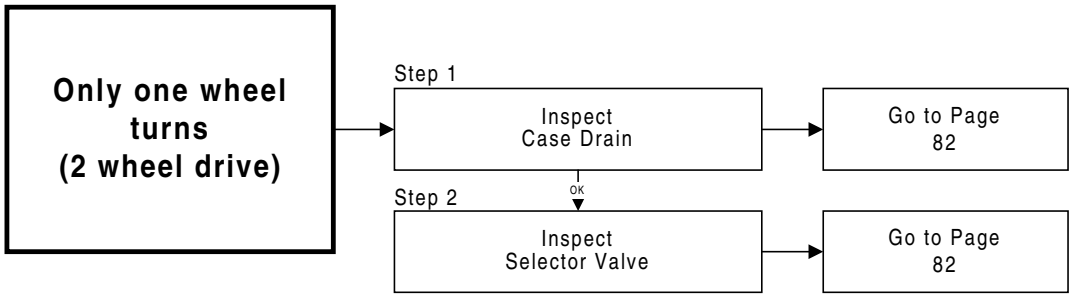

Chart 8

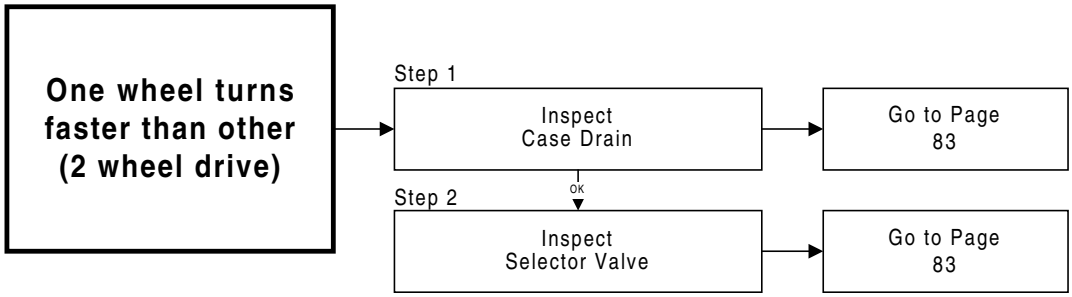

Drive system is non-operational with controller in either direction

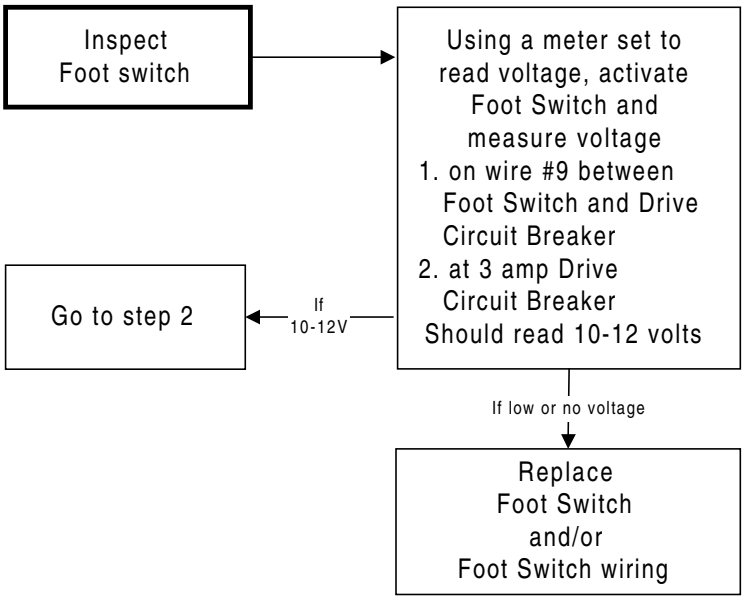

Step 1

Step 2

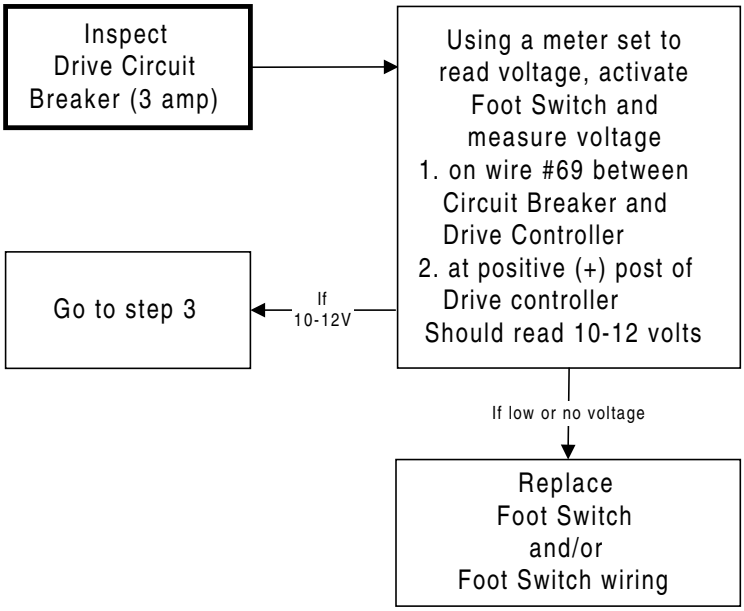

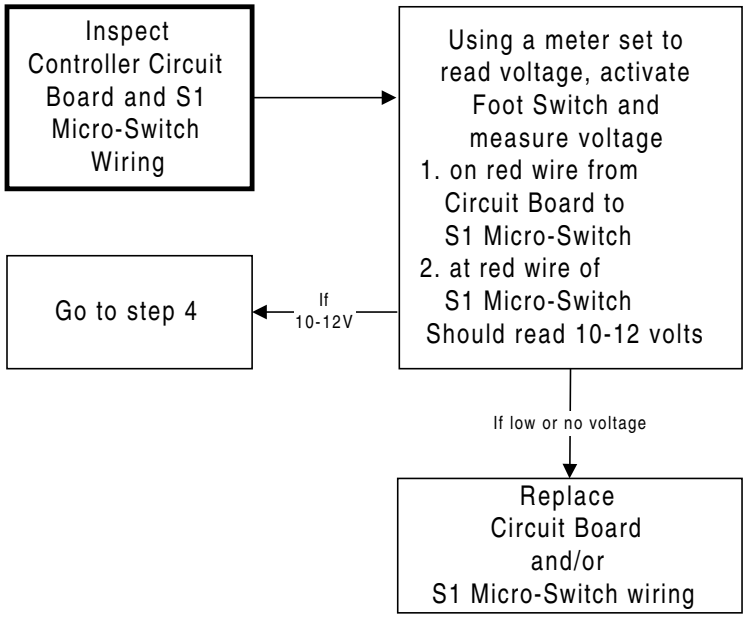
Inspect Controller Circuit Board and S1 Micro-Switch Wiring
Using a meter set to read voltage, activate Foot Switch and measure voltage
1. on red wire from Circuit Board to S1 Micro-Switch
2. at red wire of S1 Micro-Switch
Should read 10-12 volts
If 10-12V
Go to step 4
If low or no voltage
Replace Circuit Board and/or S1 Micro-Switch wiring

Step 3

Step 4

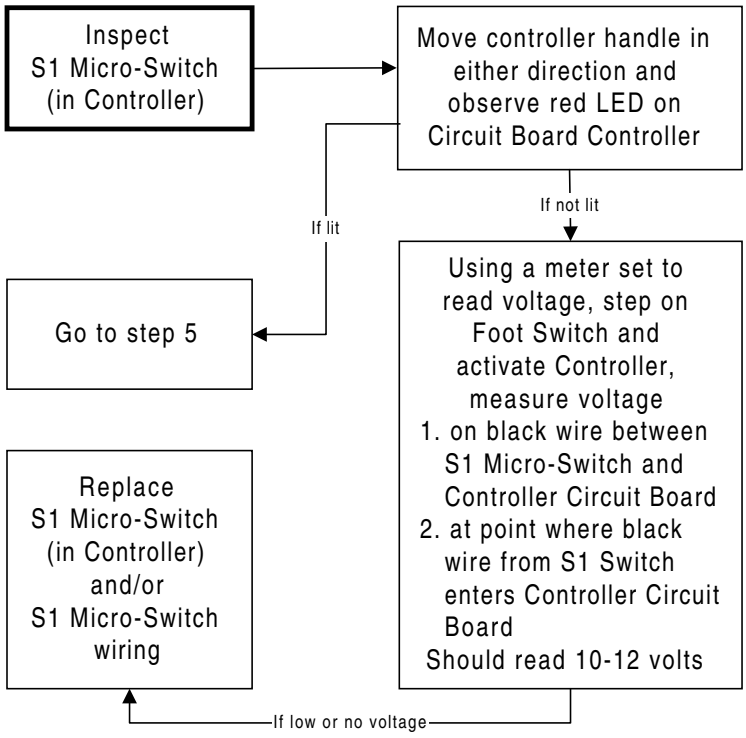
Inspect S1 Micro-Switch (in Controller)
Move controller handle in either direction and observe red LED on Circuit Board Controller
If lit
If not lit
Go to step 5
Using a meter set to read voltage, step on Foot Switch and activate Controller, measure voltage
1. on black wire between S1 Micro-Switch and Controller Circuit Board
2. at point where black wire from S1 Switch enters Controller Circuit Board
Should read 10-12 volts
Replace S1 Micro-Switch (in Controller) and/or S1 Micro-Switch wiring
If low or no voltage

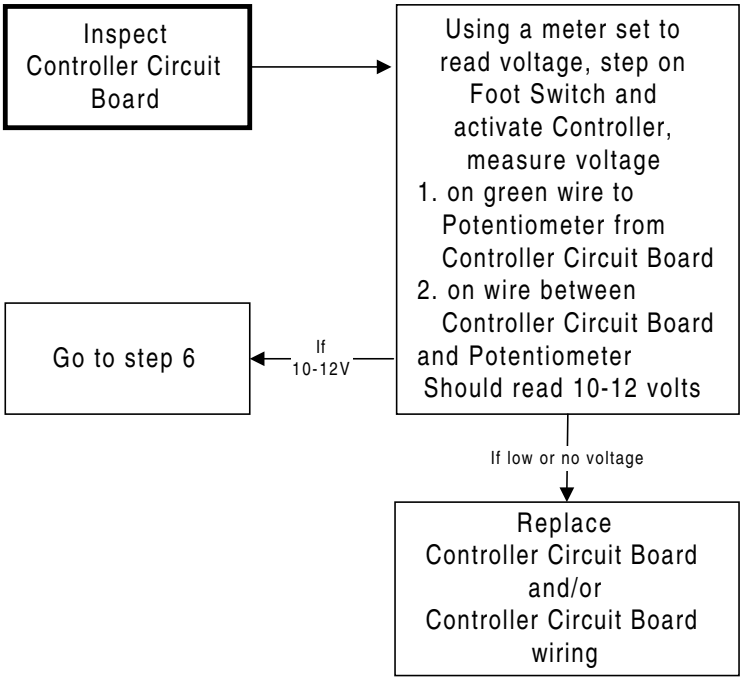
Inspect Controller Circuit Board
Using a meter set to read voltage, step on Foot Switch and activate Controller, measure voltage
1. on green wire to Potentiometer from Controller Circuit Board
2. on wire between Controller Circuit Board and Potentiometer
Should read 10-12 volts
If 10-12V
Go to step 6
If low or no voltage
Replace Controller Circuit Board and/or Controller Circuit Board wiring

Step 5

Step 6

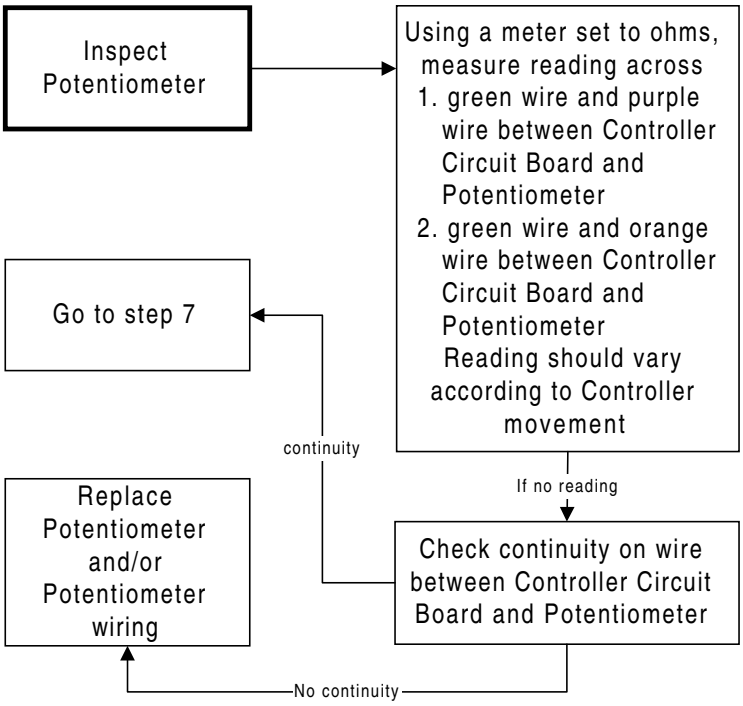
Inspect Potentiometer
Using a meter set to ohms, measure reading across
1. green wire and purple wire between Controller Circuit Board and Potentiometer
2. green wire and orange wire between Controller Circuit Board and Potentiometer
Reading should vary according to Controller movement
Go to step 7
continuity
If no reading
Replace Potentiometer and/or Potentiometer wiring
Check continuity on wire between Controller Circuit Board and Potentiometer
No continuity

⚠CAUTION

Machine function will be moving when manual override is activated.

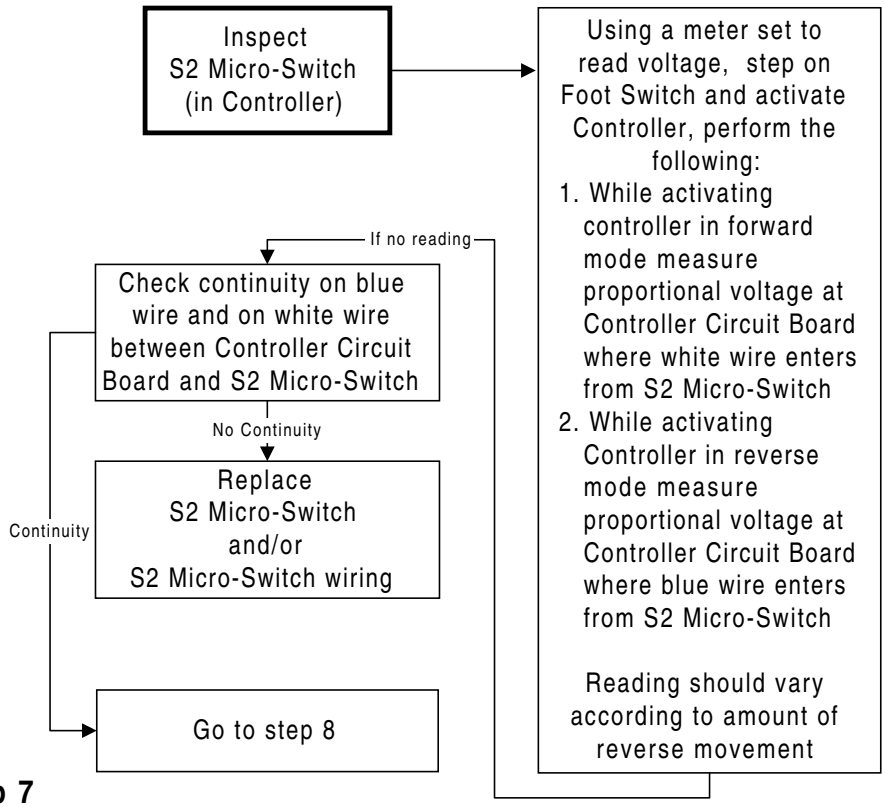

Step 7

Step 8

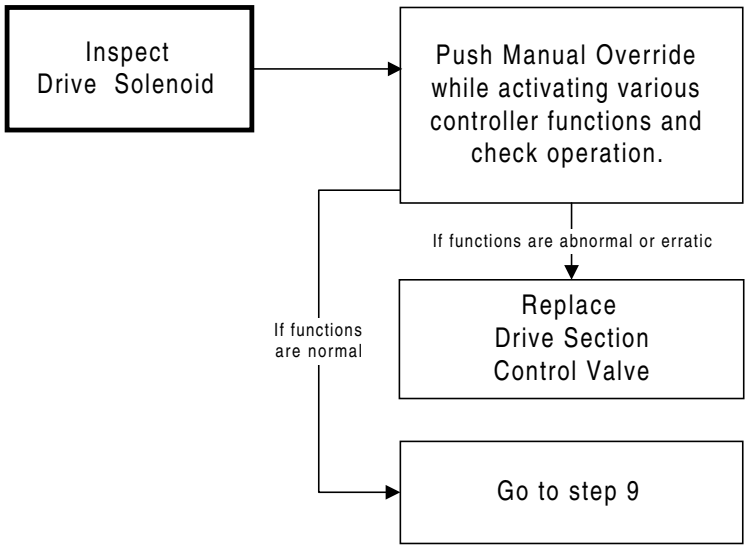

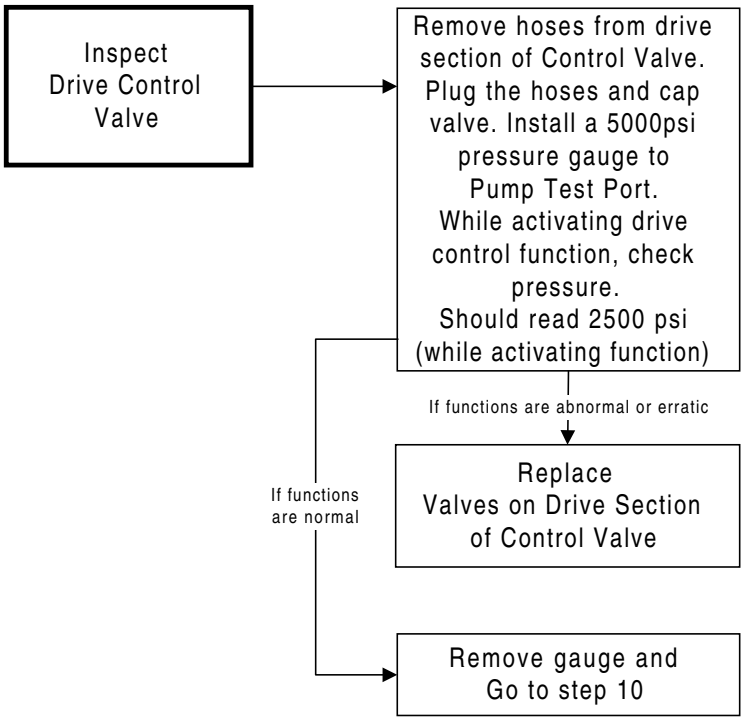

Step 9

Step 10

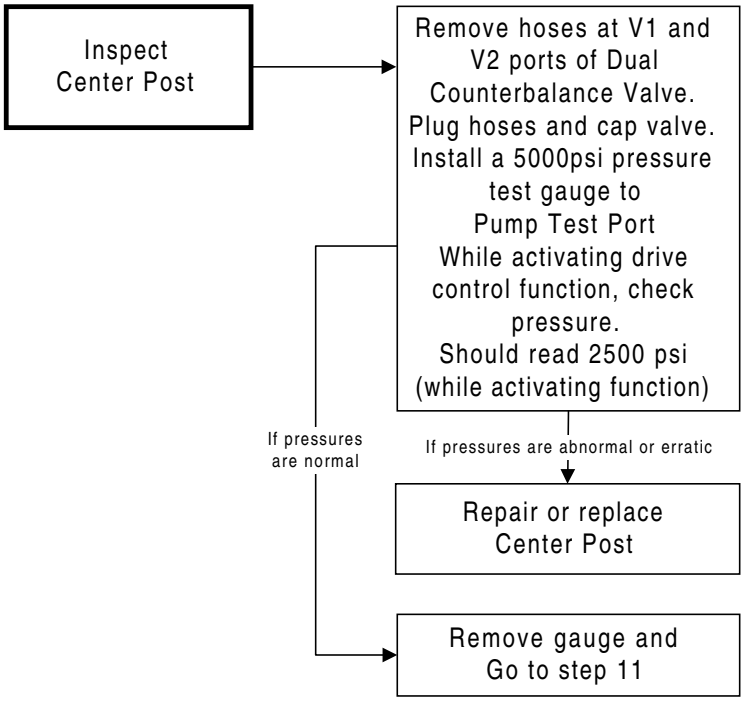

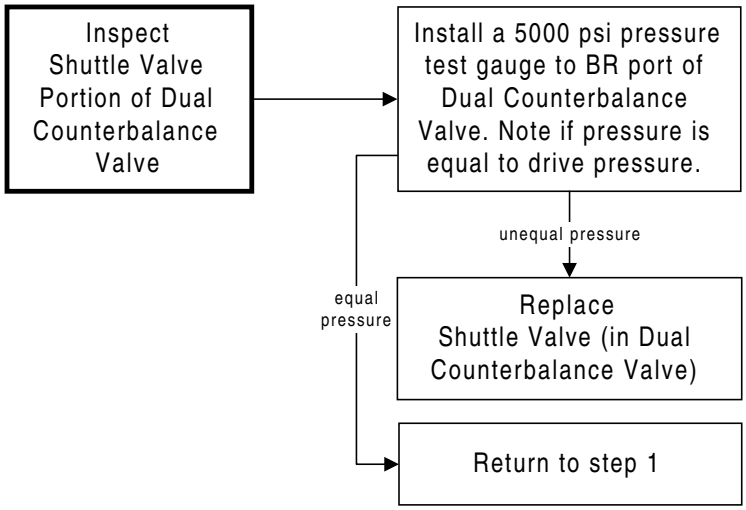
Inspect Shuttle Valve Portion of Dual Counterbalance Valve
Install a 5000 psi pressure test gauge to BR port of Dual Counterbalance Valve. Note if pressure is equal to drive pressure.
unequal pressure
equal pressure
Replace Shuttle Valve (in Dual Counterbalance Valve)
Return to step 1

Step 11

No forward drive (Reverse Ok)

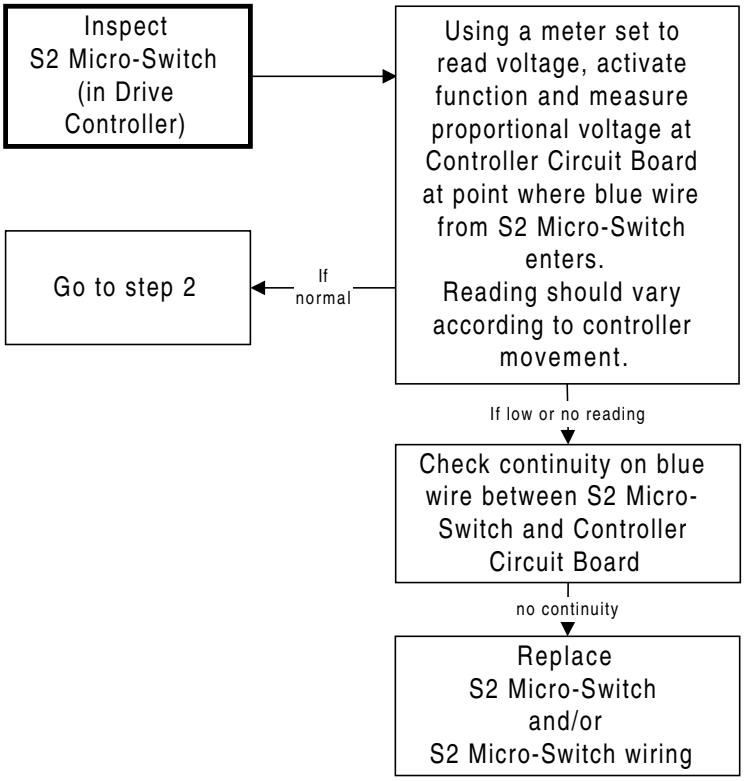

Step 1

Step 2

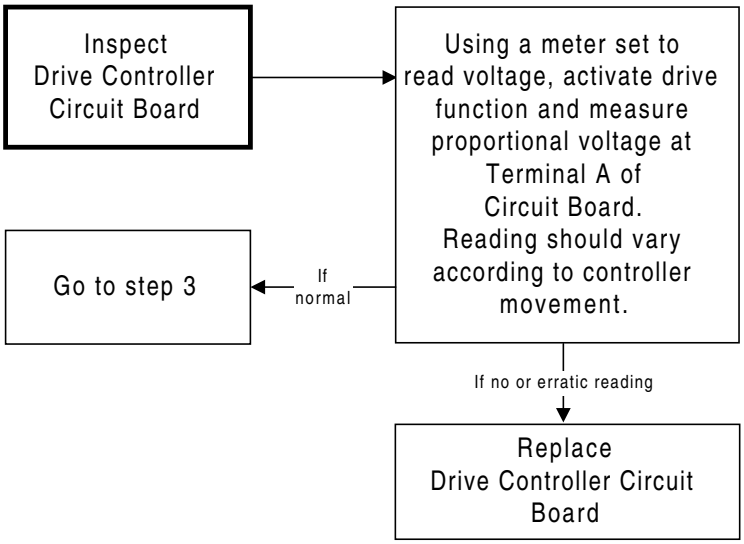

⚠CAUTION
Machine function will be moving when manual override is activated.

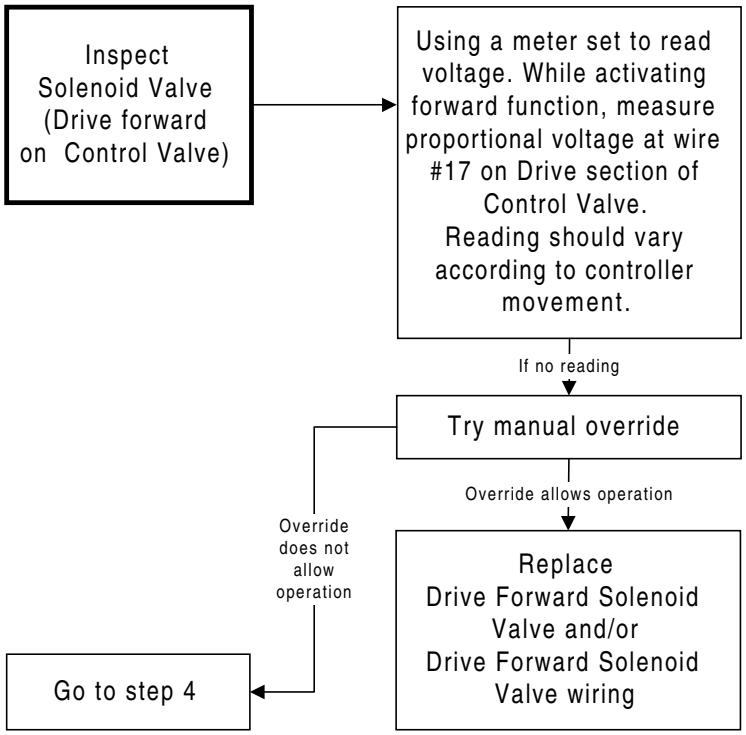

Step 3

Step 4

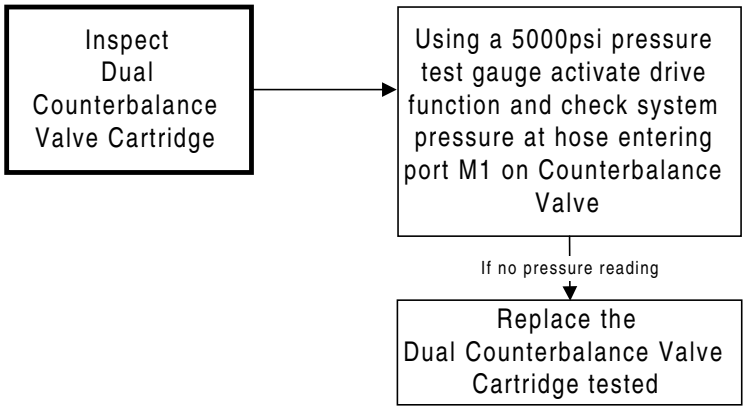

No reverse drive (Forward Ok)

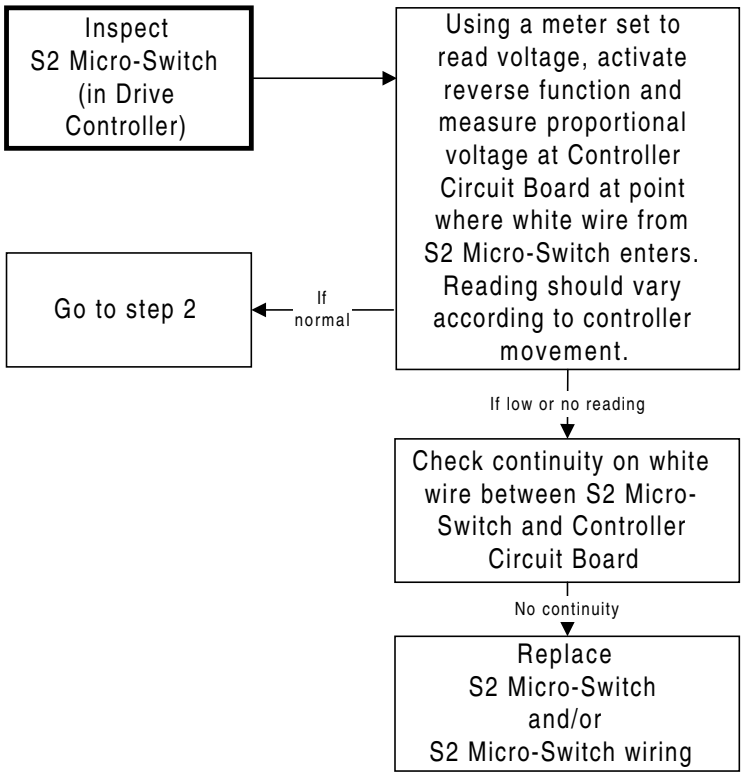

Step 1

Step 2

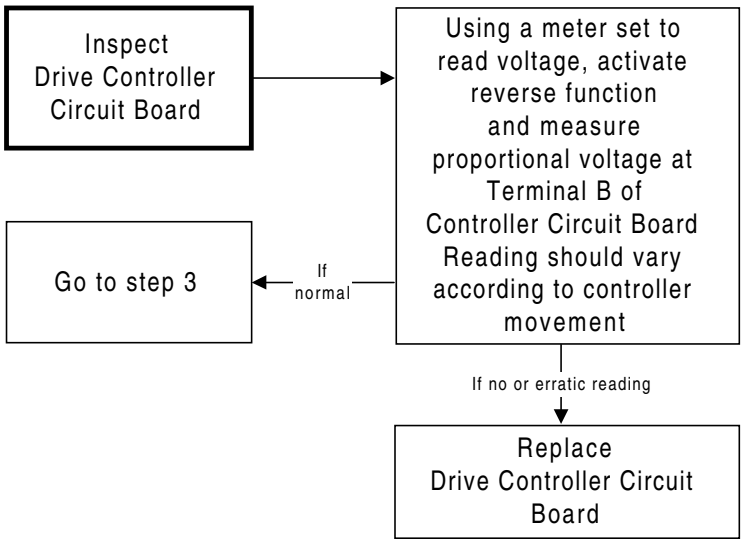

⚠CAUTION
Machine function will be moving when manual override is activated.

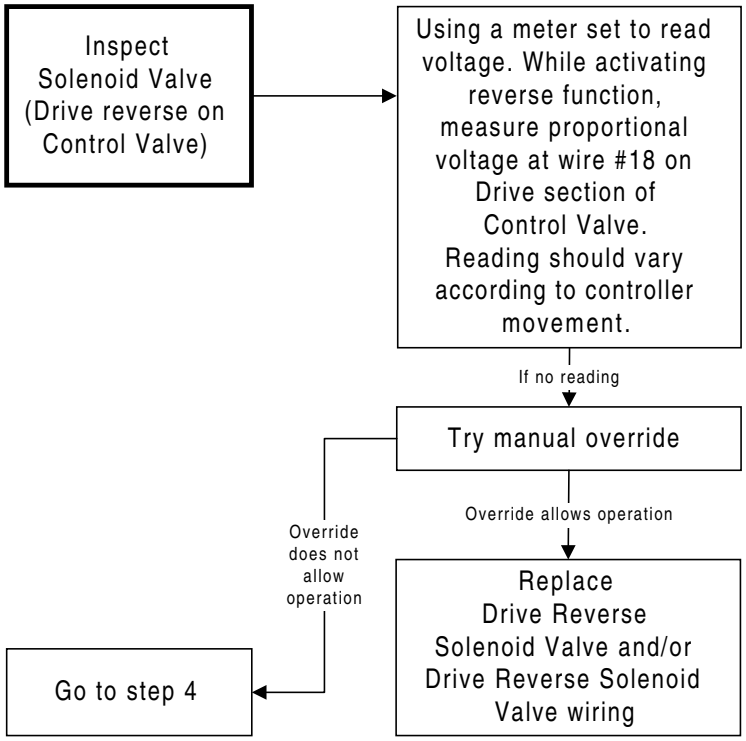

Step 3

Step 4

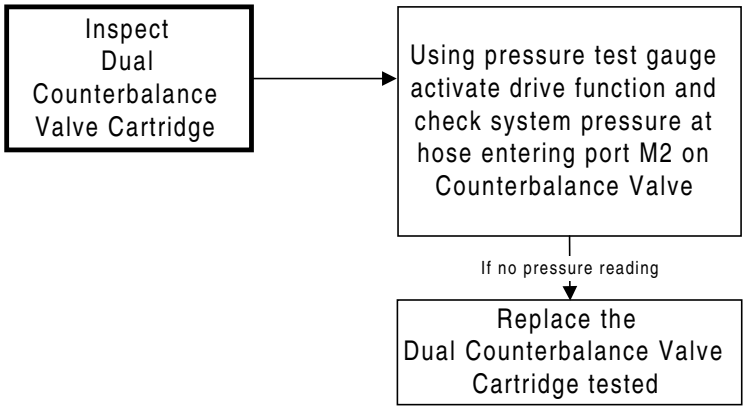

Drive high range not operating

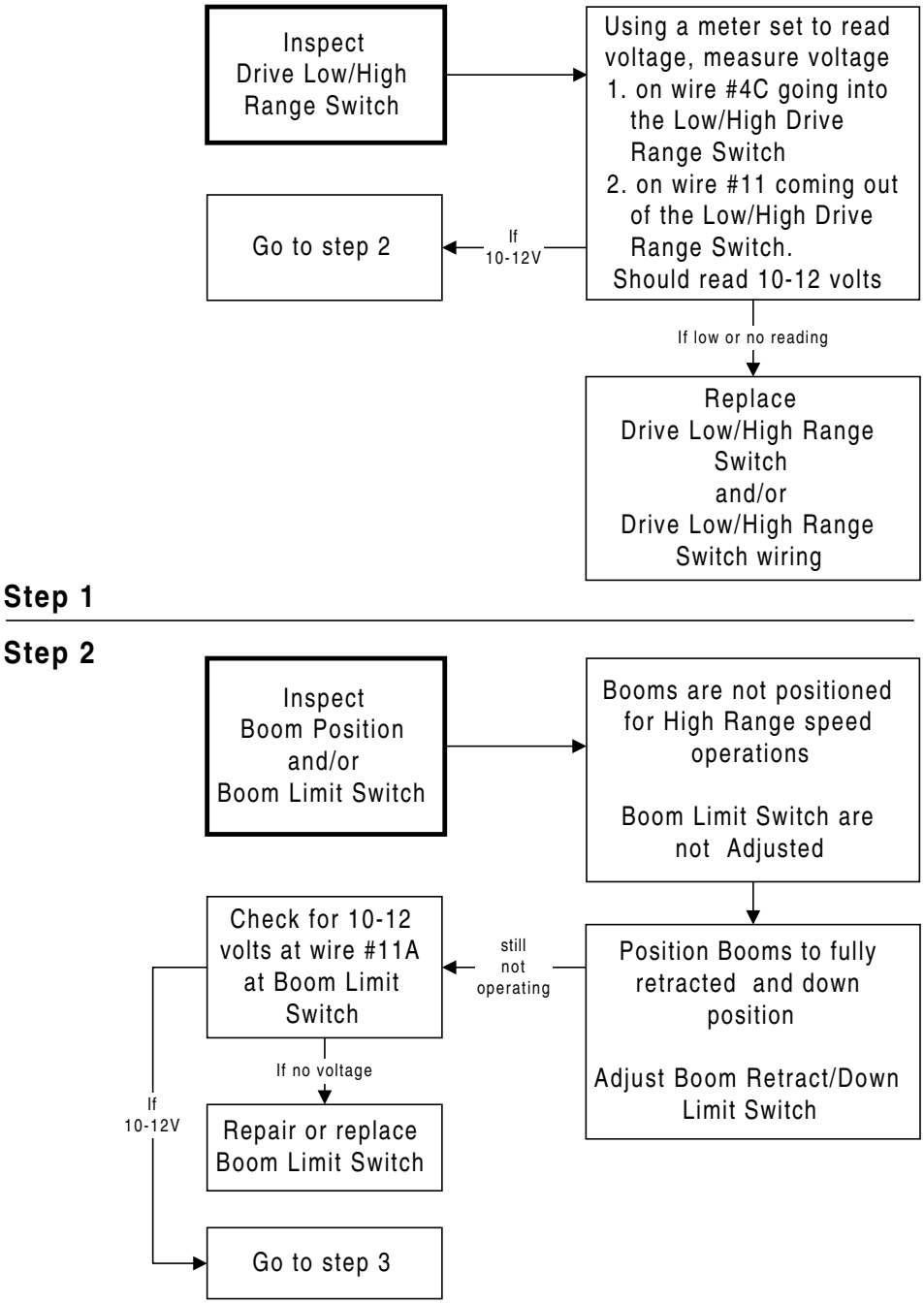

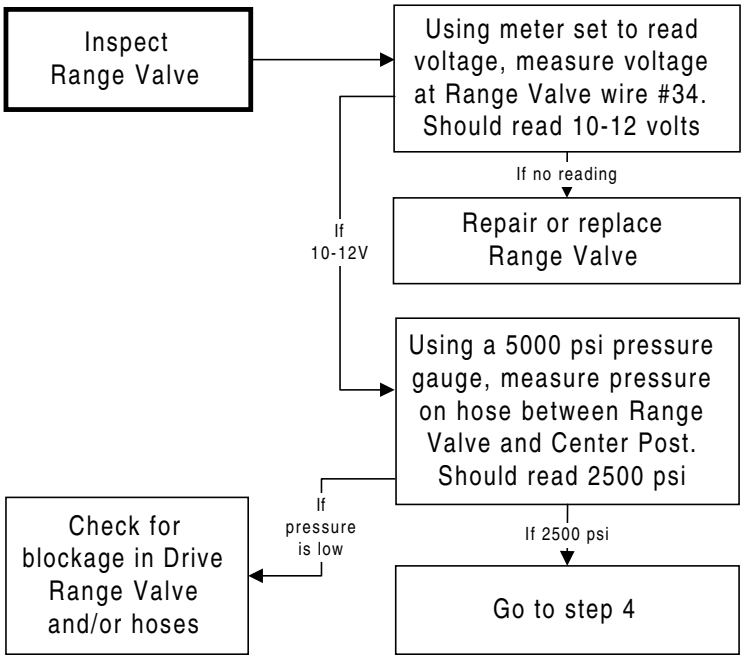
Inspect Range Valve
Using meter set to read voltage, measure voltage at Range Valve wire #34. Should read 10-12 volts
If no reading
Repair or replace Range Valve
If 10-12V
Using a 5000 psi pressure gauge, measure pressure on hose between Range Valve and Center Post. Should read 2500 psi
If pressure is low
Check for blockage in Drive Range Valve and/or hoses
If 2500 psi
Go to step 4

Step 3

Step 4

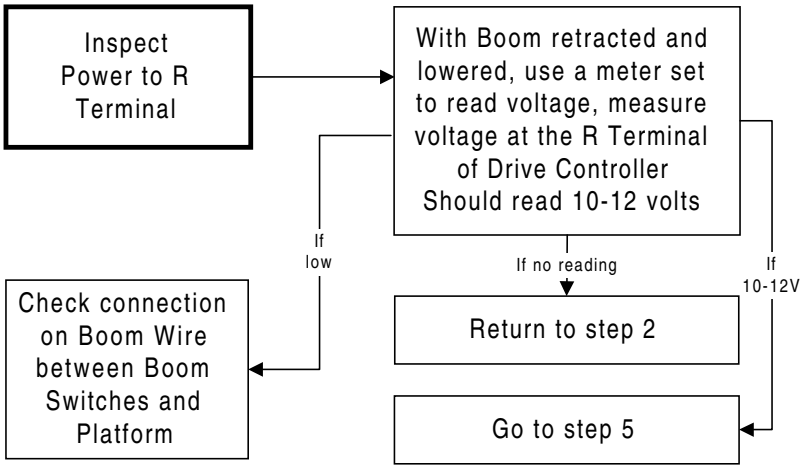
Inspect Power to R Terminal
With Boom retracted and lowered, use a meter set to read voltage, measure voltage at the R Terminal of Drive Controller Should read 10-12 volts
If low
Check connection on Boom Wire between Boom Switches and Platform
If no reading
Return to step 2
If 10-12V
Go to step 5

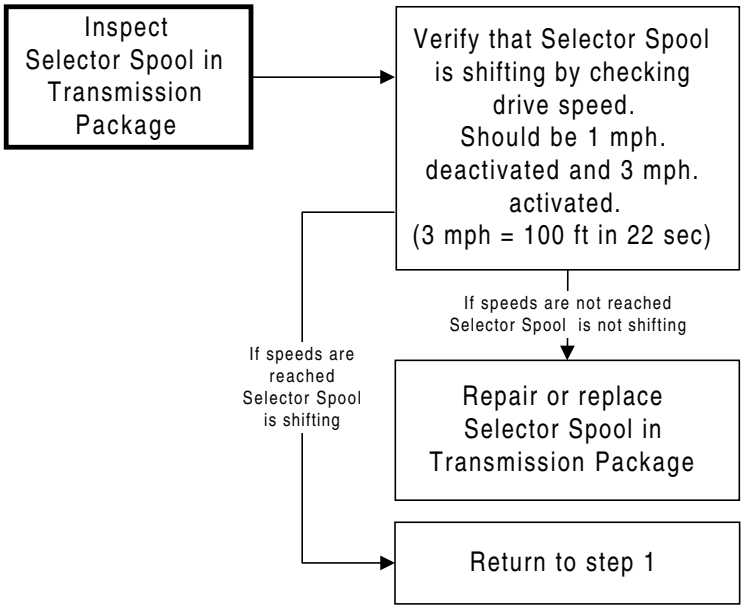
Inspect Selector Spool in Transmission Package
Verify that Selector Spool is shifting by checking drive speed. Should be 1 mph. deactivated and 3 mph. activated. (3 mph = 100 ft in 22 sec)
If speeds are not reached Selector Spool is not shifting
Repair or replace Selector Spool in Transmission Package
If speeds are reached Selector Spool is shifting
Return to step 1

Step 5

Machine drives at full speed with platform raised and/or extended

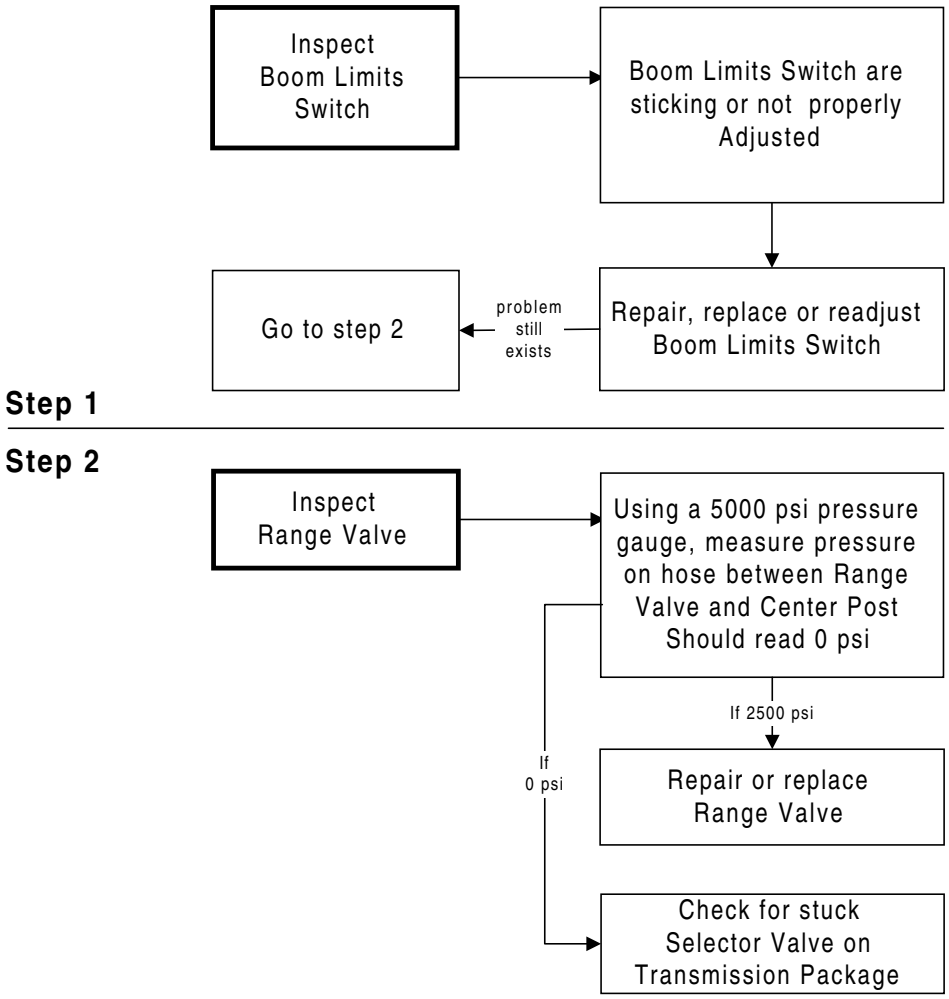

Brakes will not release

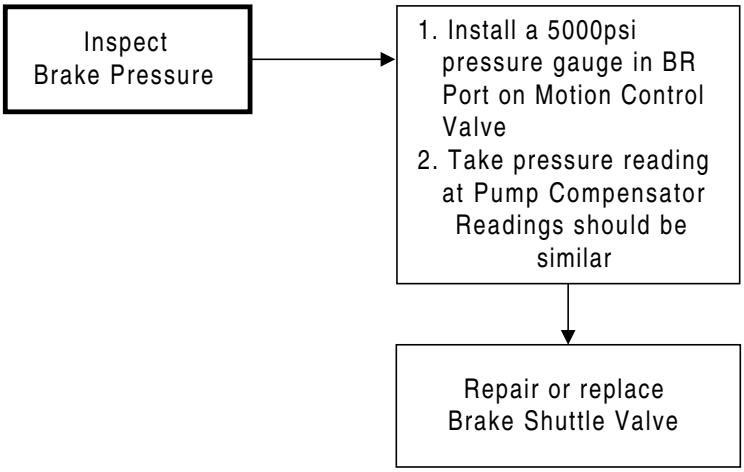

Step 1

Only one wheel turns (2 wheel drive)

Note:
If machine is equipped with Tow Package Option make sure Hubs are engaged.

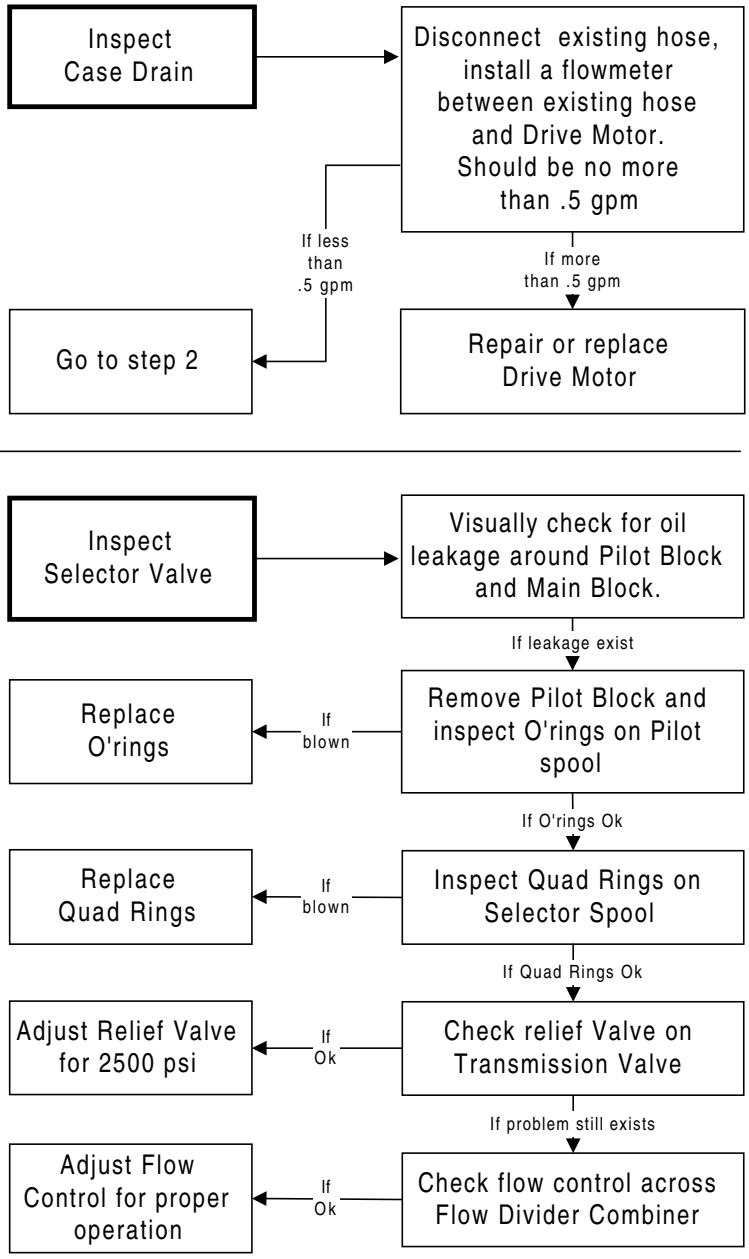

One wheel turns faster than other (2 wheel drive)

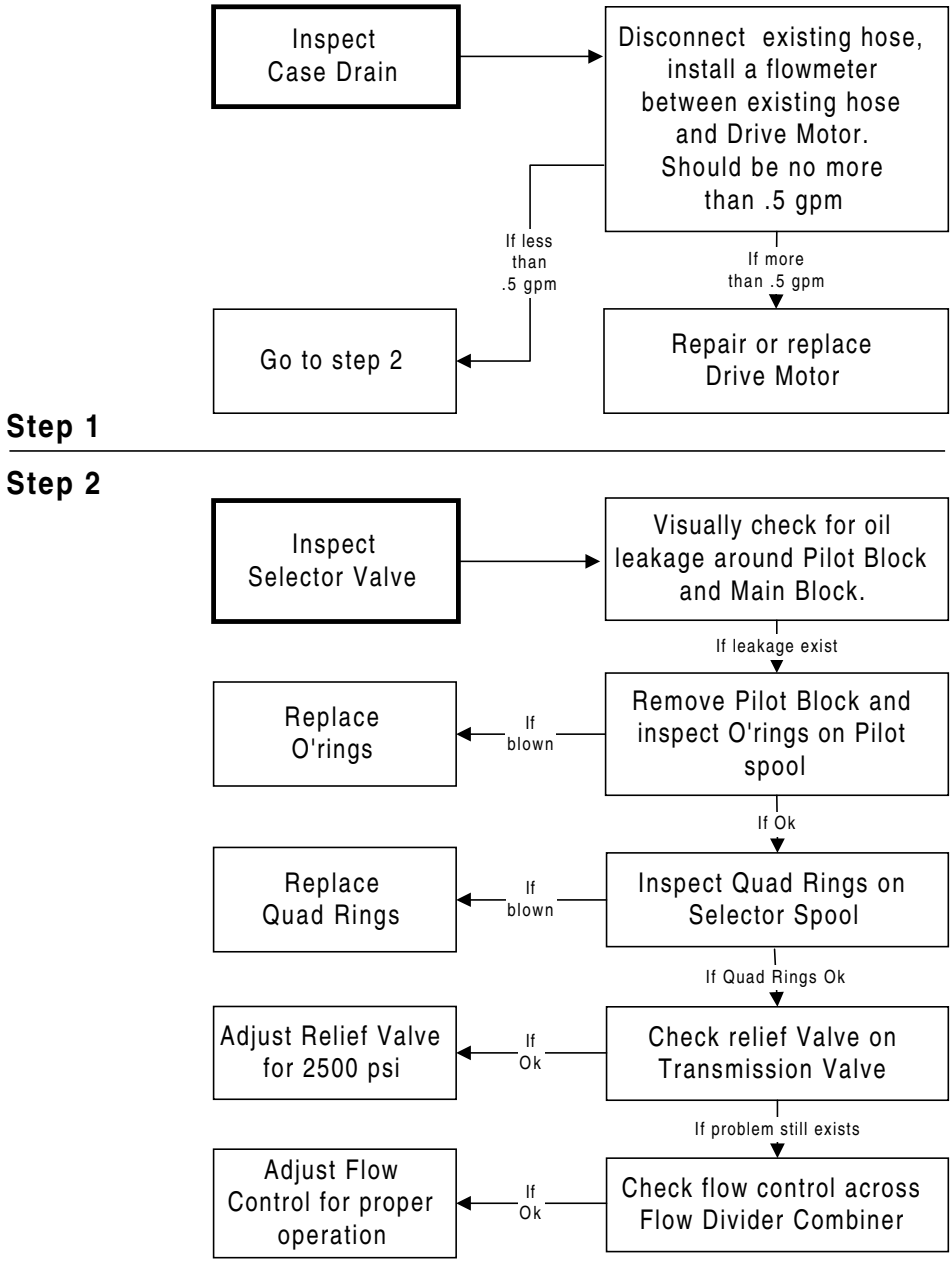

SECTION FIVE:
EMERGENCY POWER SYSTEM DIAGNOSTICS

Chart 1

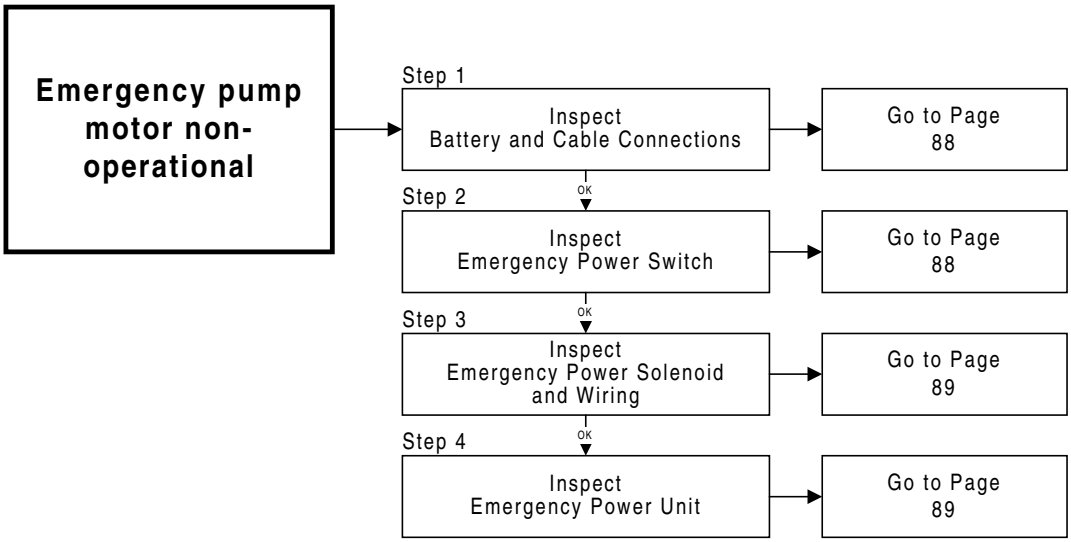

Chart 2

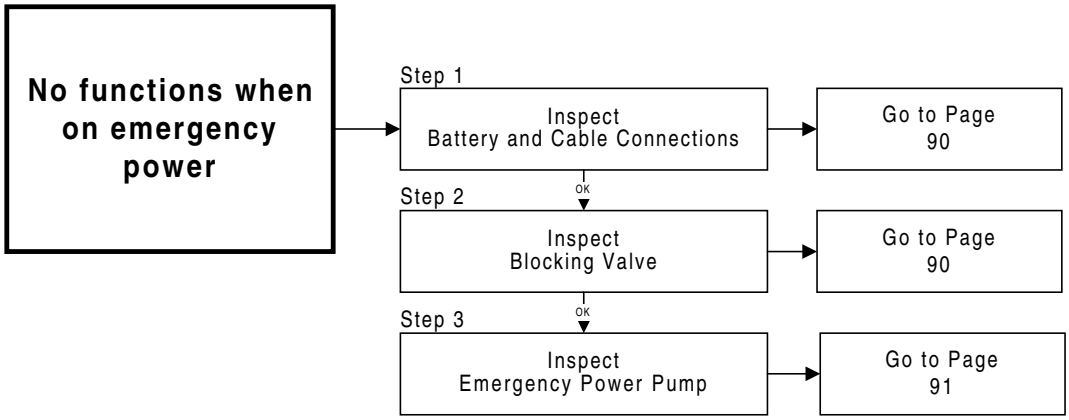

Emergency pump motor non-operational

⚠DANGER

Batteries omit hydrogen and oxygen elements that can combine explosively. Do not smoke or permit open flames or sparks when checking batteries

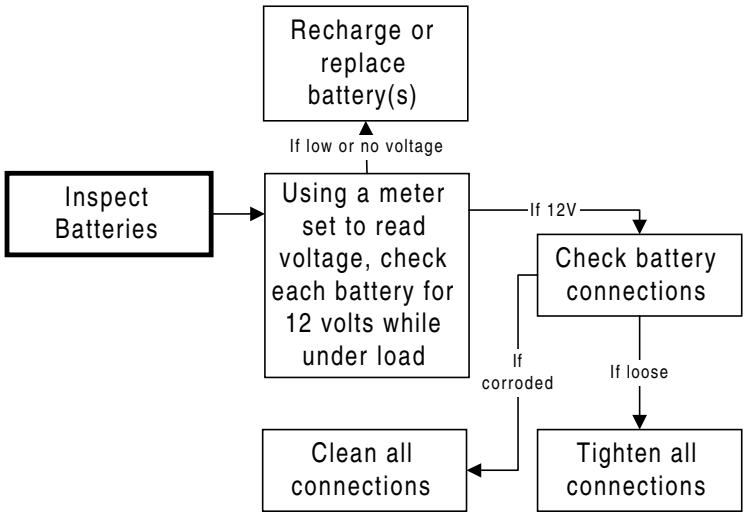

Step 1

Step 2

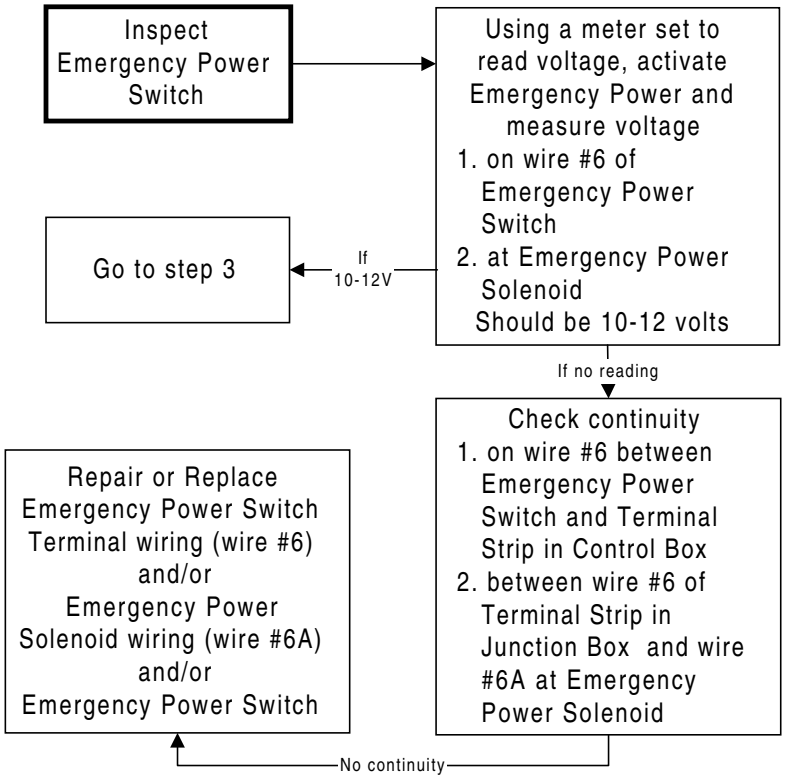

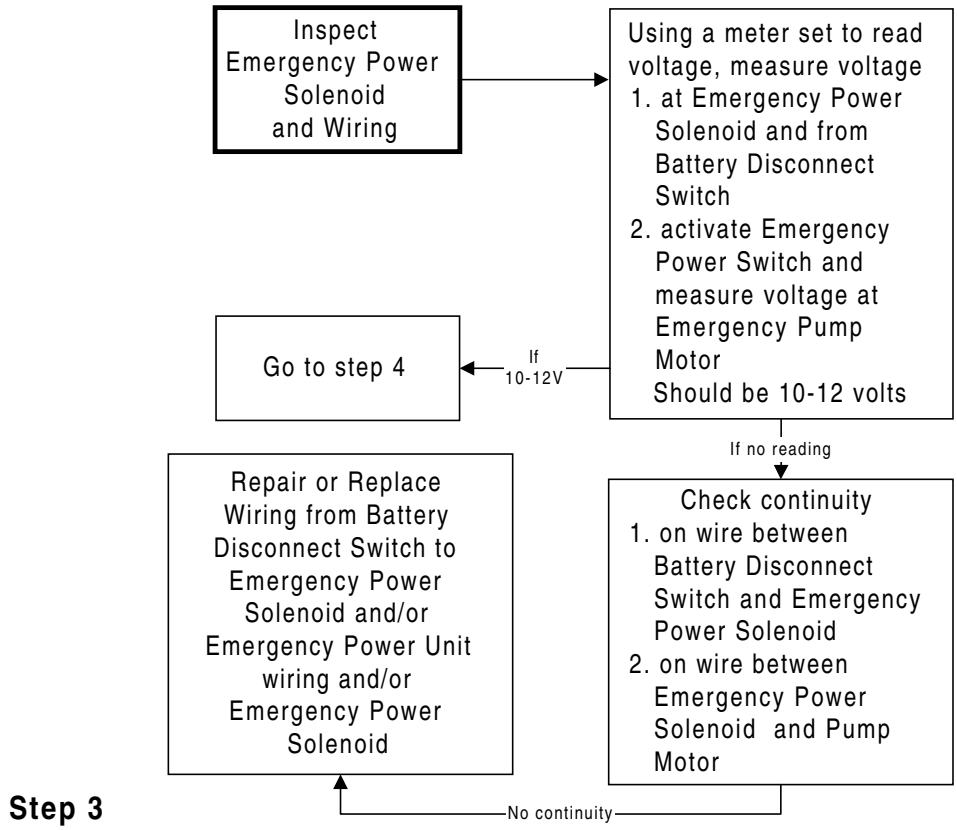
Inspect Emergency Power Solenoid and Wiring
Using a meter set to read voltage, measure voltage
1. at Emergency Power Solenoid and from Battery Disconnect Switch
2. activate Emergency Power Switch and measure voltage at Emergency Pump Motor
Should be 10-12 volts
If 10-12V
Go to step 4
If no reading
Check continuity
1. on wire between Battery Disconnect Switch and Emergency Power Solenoid
2. on wire between Emergency Power Solenoid and Pump Motor
Repair or Replace Wiring from Battery Disconnect Switch to Emergency Power Solenoid and/or Emergency Power Unit wiring and/or Emergency Power Solenoid
No continuity

Step 3

Step 4

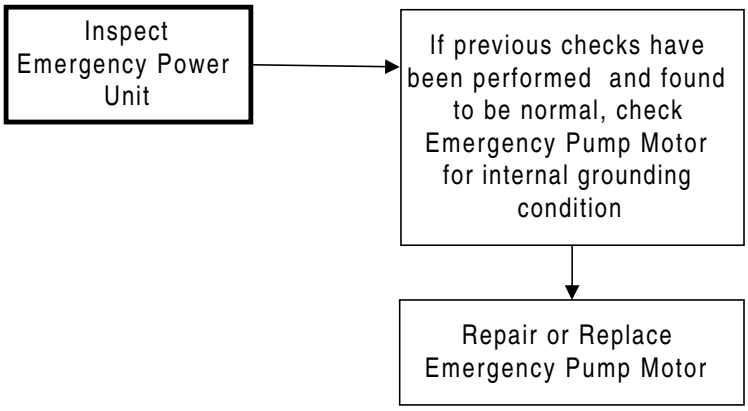
Inspect Emergency Power Unit
If previous checks have been performed and found to be normal, check Emergency Pump Motor for internal grounding condition
Repair or Replace Emergency Pump Motor

No functions when on emergency power

⚠DANGER
Batteries omit hydrogen and oxygen elements that can combine explosively. Do not smoke or permit open flames or sparks when checking batteries

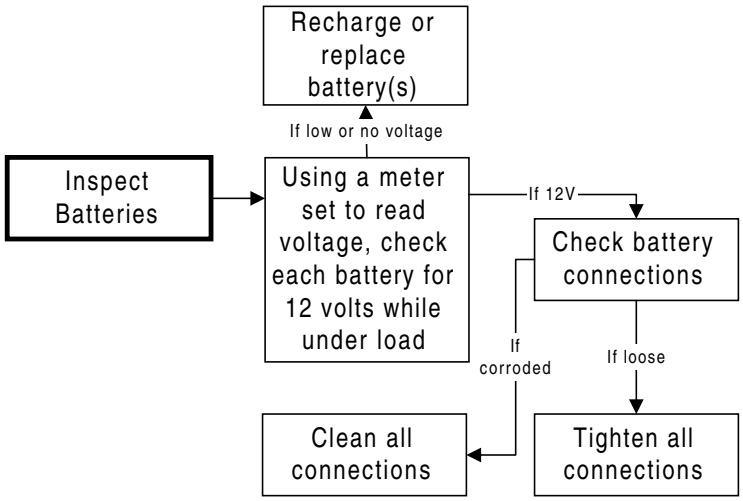

Step 1

Step 2

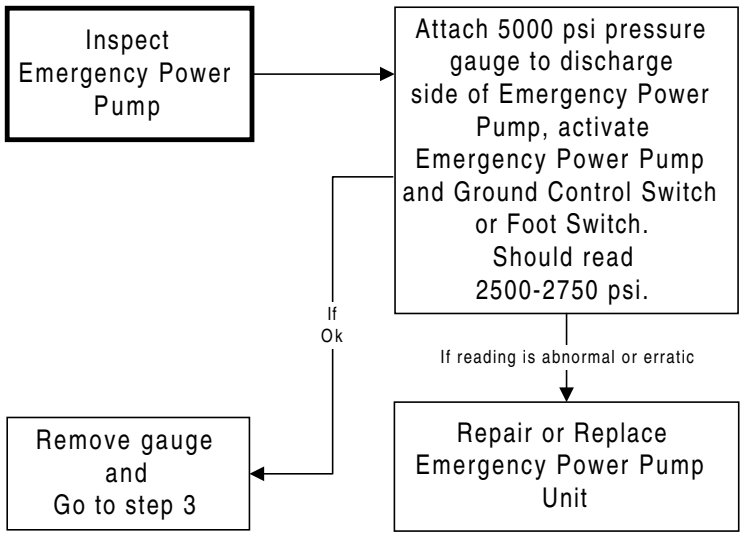

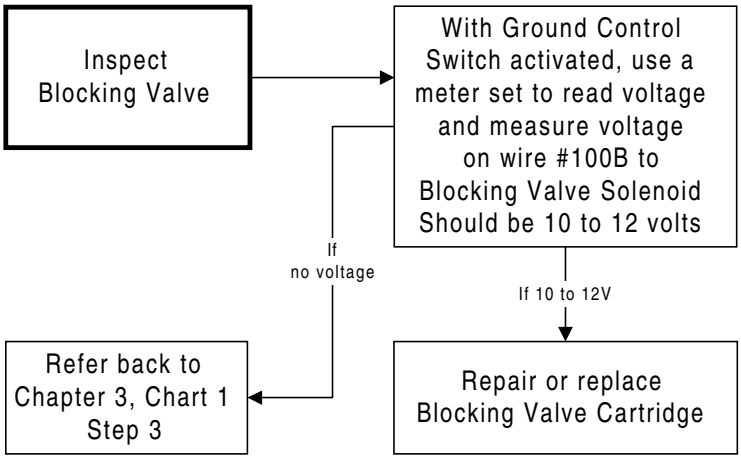
Inspect
Blocking Valve
With Ground Control Switch activated, use a meter set to read voltage and measure voltage on wire #100B to Blocking Valve Solenoid Should be 10 to 12 volts
If
no voltage
If 10 to 12V
Refer back to Chapter 3, Chart 1 Step 3
Repair or replace Blocking Valve Cartridge

Step 3

SECTION SIX:
SWING SYSTEM DIAGNOSTICS

Chart 1

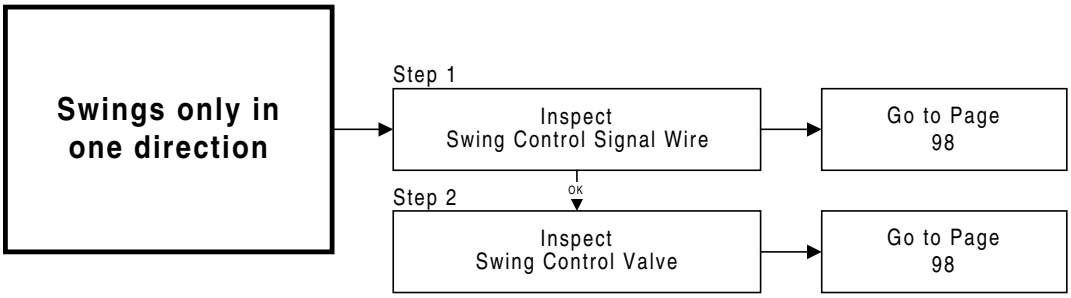

Chart 2

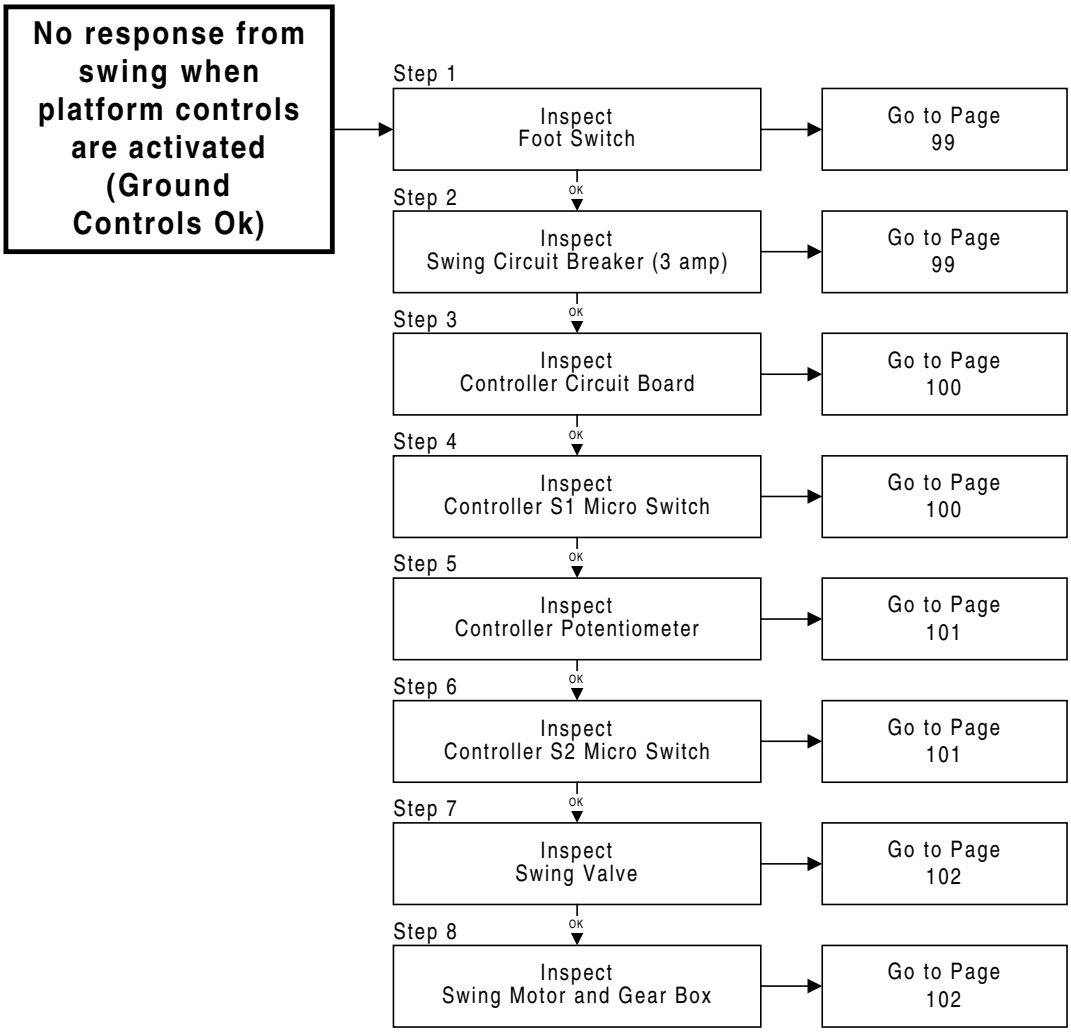

Chart 3

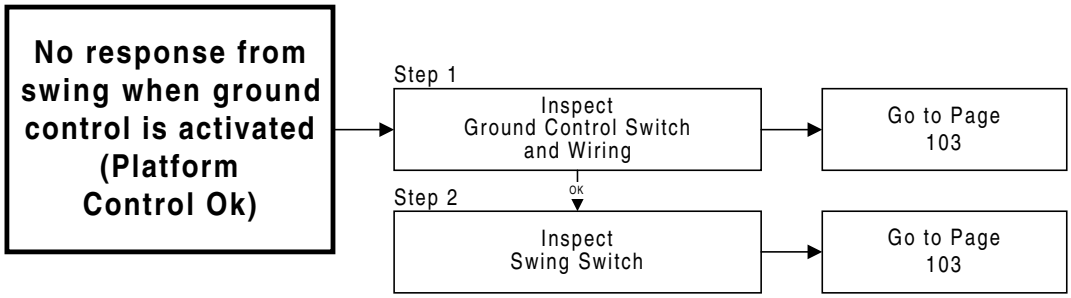

Chart 4

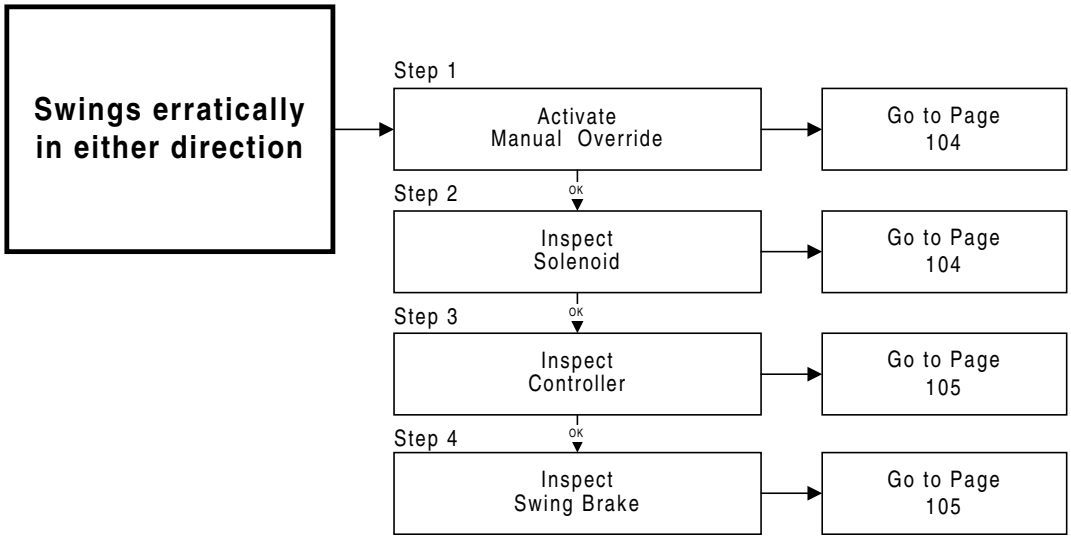

Chart 5

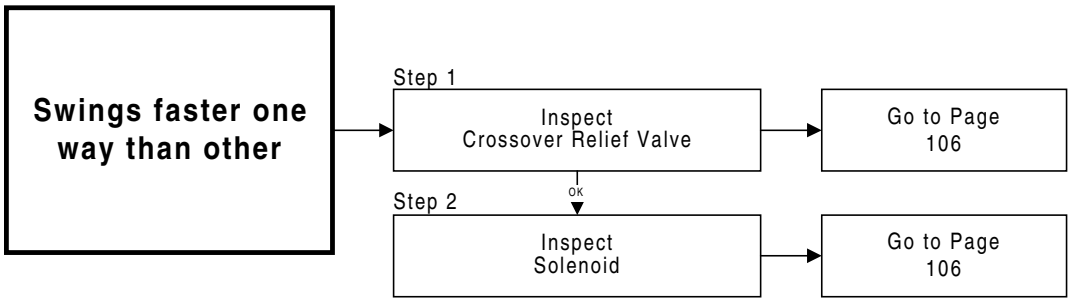

Chart 6

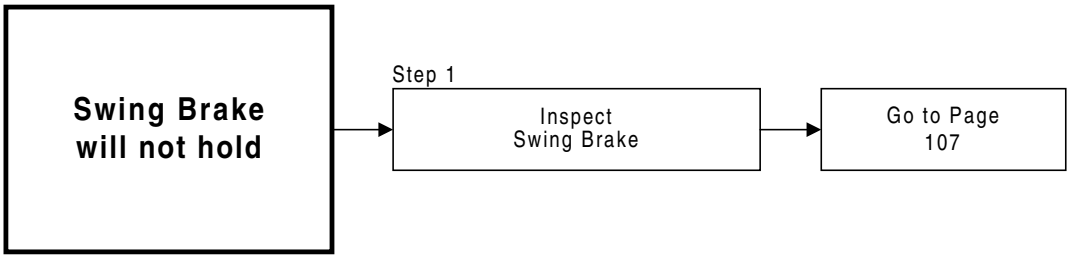

Chart 7

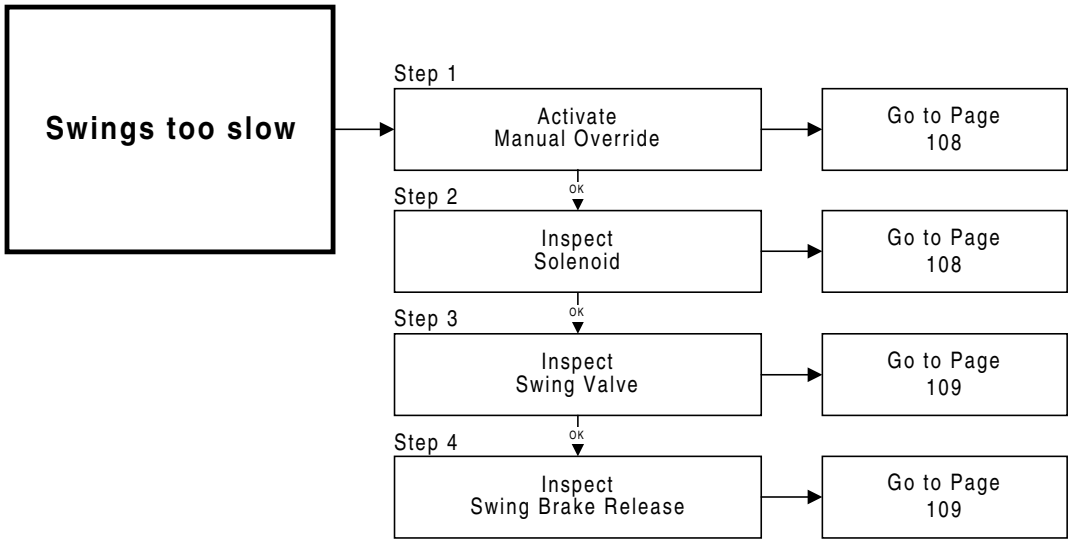

Swings only in one direction

⚠DANGER

When the turn table rotates clockwise (cw) it will be moving toward you. Make sure you have room to step backward.

⚠CAUTION

Machine function will be moving when manual override is activated.

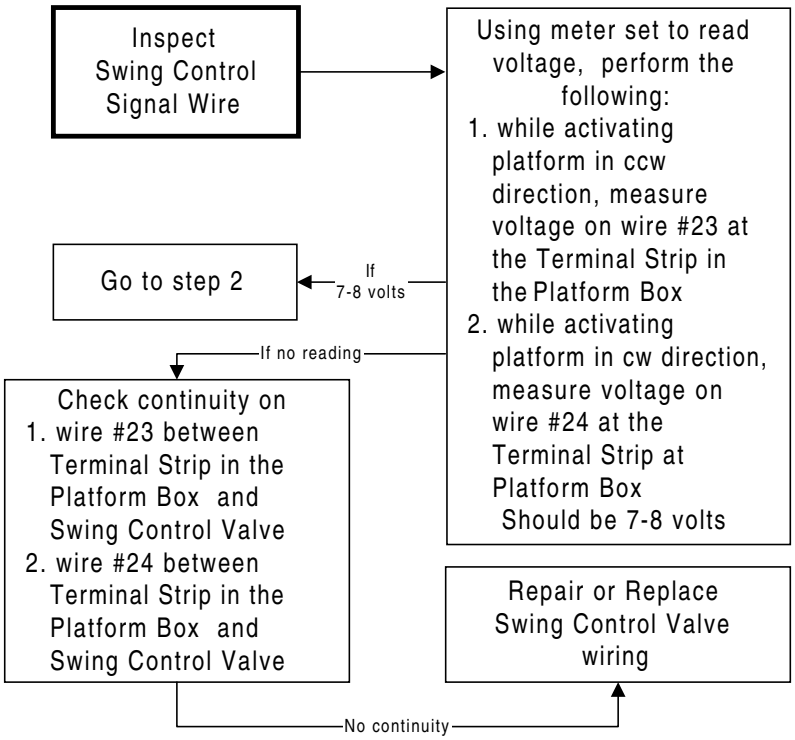

Step 1

Step 2

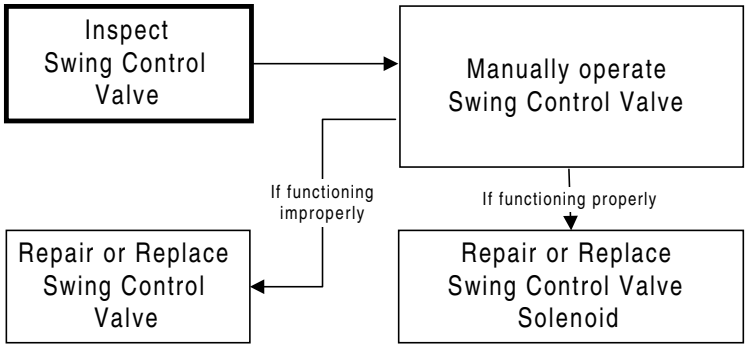

No response from swing when platform controls are activated (Ground Controls Ok)

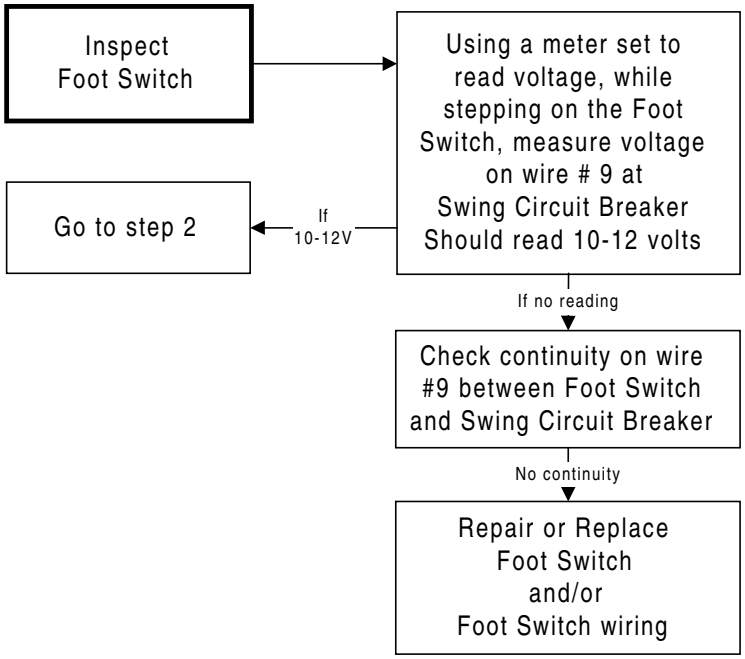

Step 1

Step 2

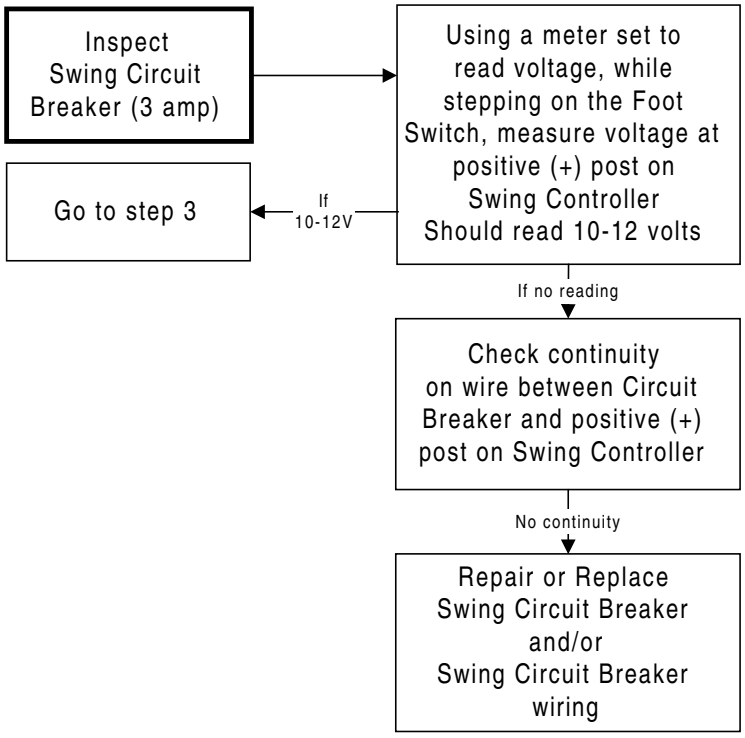

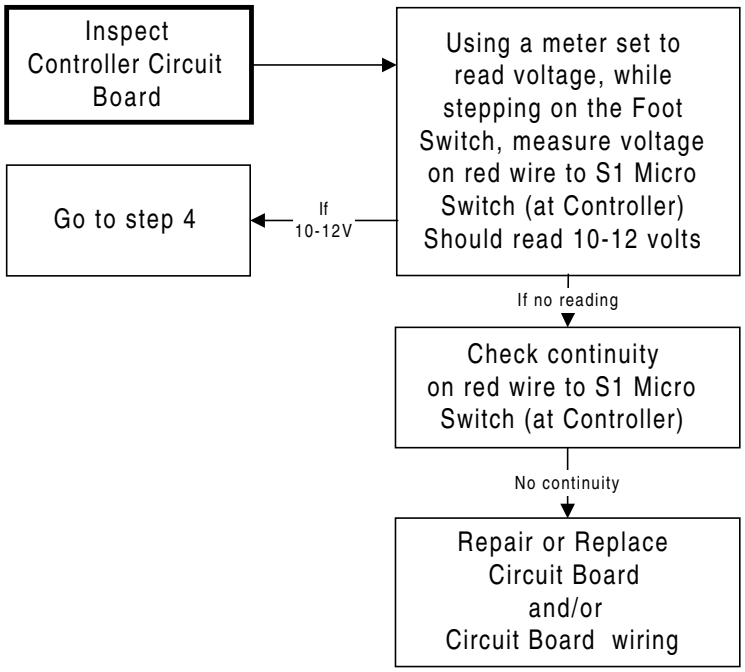
Inspect Controller Circuit Board
Using a meter set to read voltage, while stepping on the Foot Switch, measure voltage on red wire to S1 Micro Switch (at Controller) Should read 10-12 volts
Go to step 4
If 10-12V
If no reading
Check continuity on red wire to S1 Micro Switch (at Controller)
No continuity
Repair or Replace Circuit Board and/or Circuit Board wiring

Step 3

Step 4

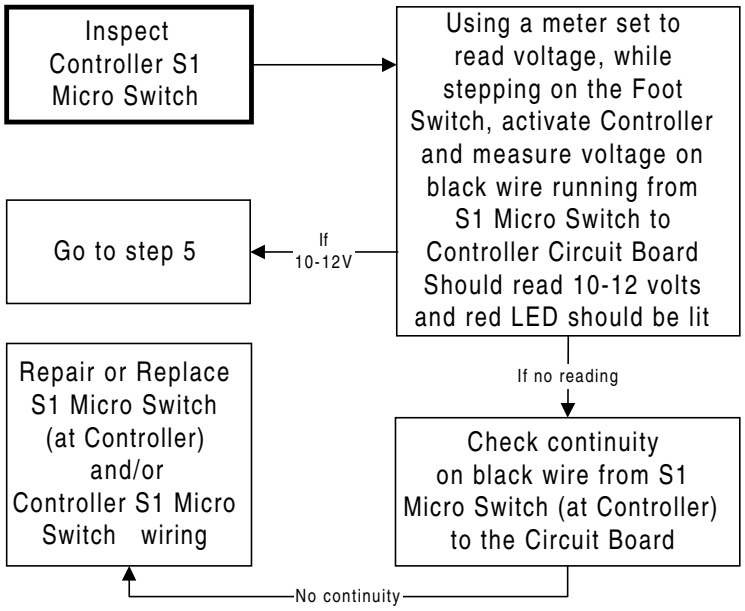
Inspect Controller S1 Micro Switch
Using a meter set to read voltage, while stepping on the Foot Switch, activate Controller and measure voltage on black wire running from S1 Micro Switch to Controller Circuit Board Should read 10-12 volts and red LED should be lit
Go to step 5
If 10-12V
If no reading
Repair or Replace S1 Micro Switch (at Controller) and/or Controller S1 Micro Switch wiring
Check continuity on black wire from S1 Micro Switch (at Controller) to the Circuit Board
No continuity

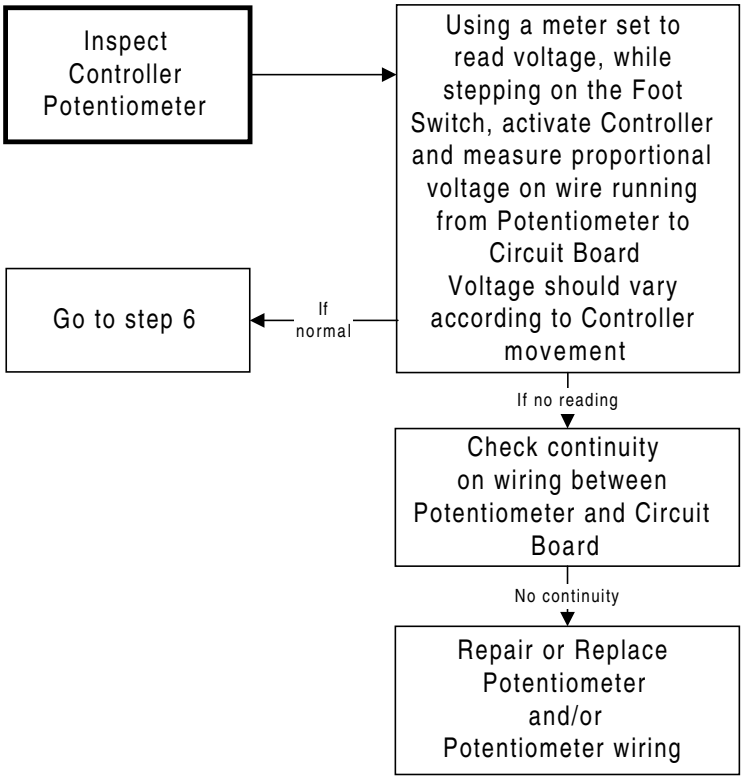
Inspect Controller Potentiometer
Using a meter set to read voltage, while stepping on the Foot Switch, activate Controller and measure proportional voltage on wire running from Potentiometer to Circuit Board
Voltage should vary according to Controller movement
If normal
Go to step 6
If no reading
Check continuity on wiring between Potentiometer and Circuit Board
No continuity
Repair or Replace Potentiometer and/or Potentiometer wiring

Step 5

Step 6

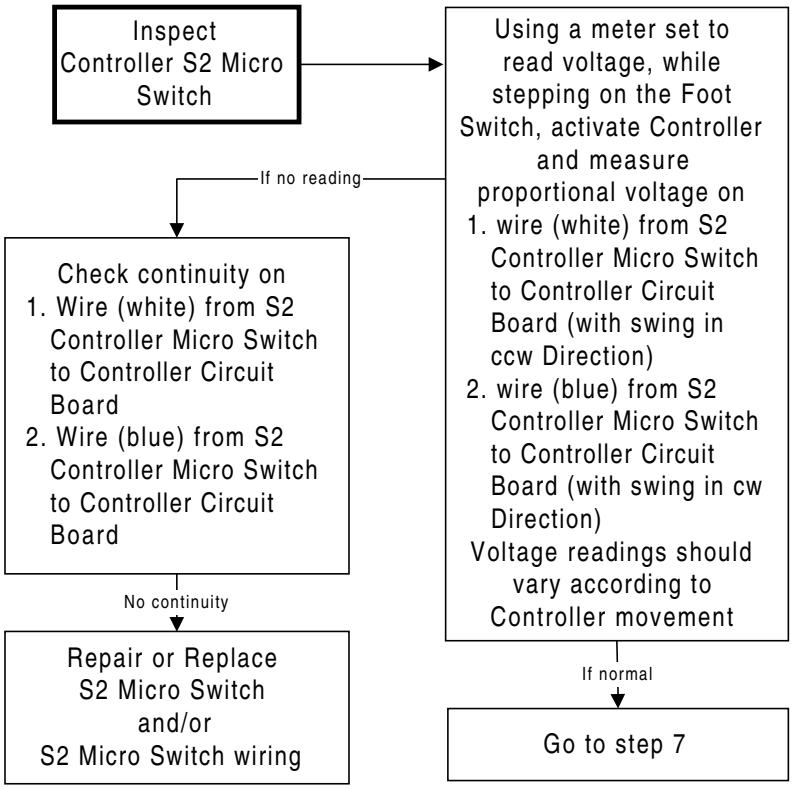
Inspect Controller S2 Micro Switch
Using a meter set to read voltage, while stepping on the Foot Switch, activate Controller and measure proportional voltage on
1. wire (white) from S2 Controller Micro Switch to Controller Circuit Board (with swing in ccw Direction)
2. wire (blue) from S2 Controller Micro Switch to Controller Circuit Board (with swing in cw Direction)
Voltage readings should vary according to Controller movement
If no reading
Check continuity on
1. Wire (white) from S2 Controller Micro Switch to Controller Circuit Board
2. Wire (blue) from S2 Controller Micro Switch to Controller Circuit Board
No continuity
Repair or Replace S2 Micro Switch and/or S2 Micro Switch wiring
If normal
Go to step 7

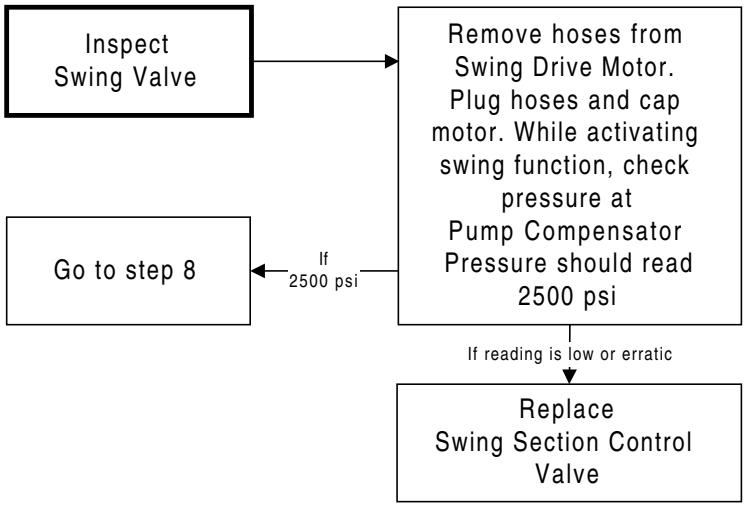
Inspect
Swing Valve
Remove hoses from
Swing Drive Motor.
Plug hoses and cap
motor. While activating
swing function, check
pressure at
Pump Compensator
Pressure should read
2500 psi
Go to step 8
If
2500 psi
If reading is low or erratic
Replace
Swing Section Control
Valve

Step 7

Step 8

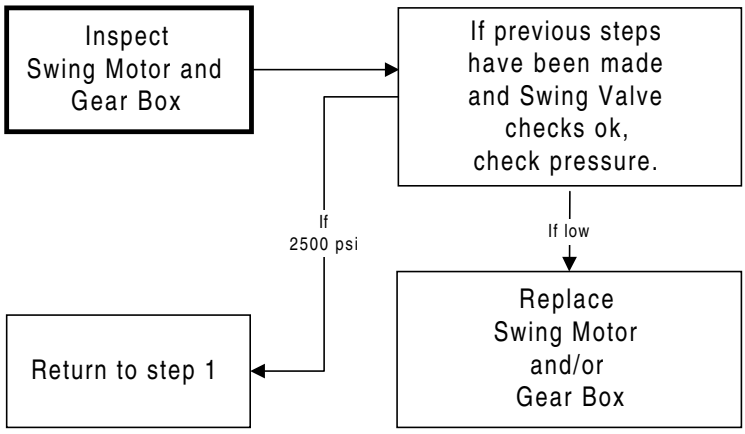
Inspect
Swing Motor and
Gear Box
If previous steps
have been made
and Swing Valve
checks ok,
check pressure.
If
2500 psi
If low
Replace
Swing Motor
and/or
Gear Box
Return to step 1

No response from swing when ground controls are activated (Platform Controls Ok)

⚠DANGER

When the turn table rotates clockwise (cw) it will be moving toward you. Make sure you have room to step backward.

Step 1

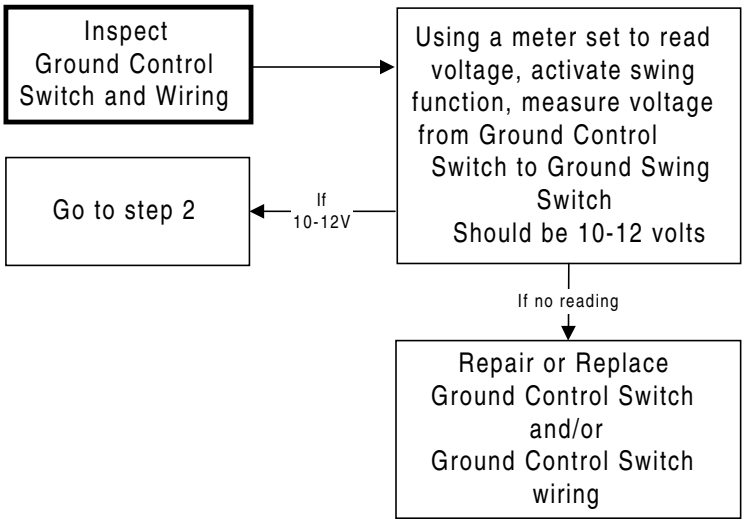

Step 2

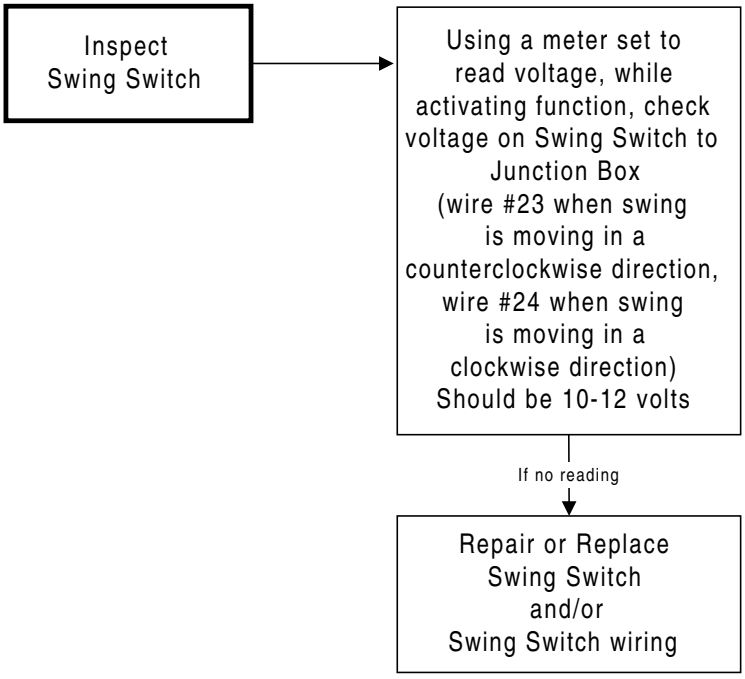

Swings erratically in either direction

⚠CAUTION

Machine function will be moving when manual override is activated.

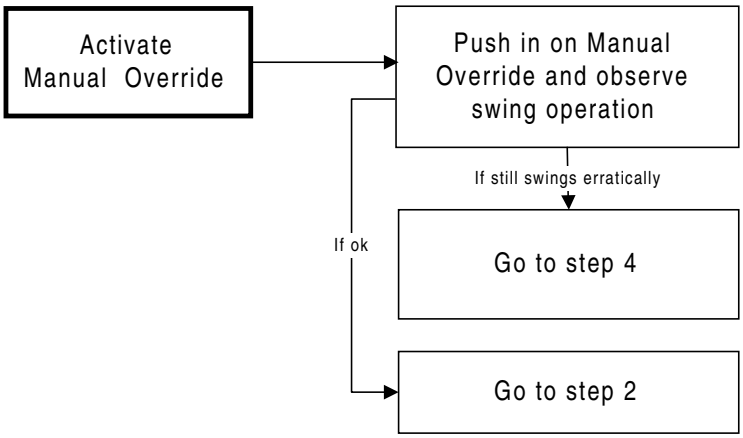

Step 1

Step 2

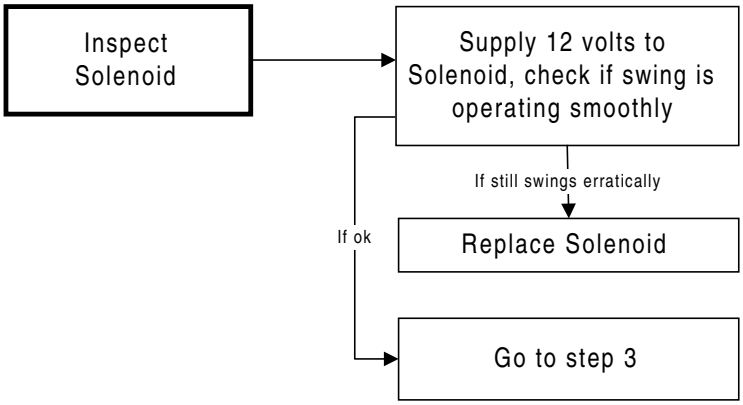

⚠DANGER

When the turn table rotates clockwise (cw) it will be moving toward you. Make sure you have room to step backward.

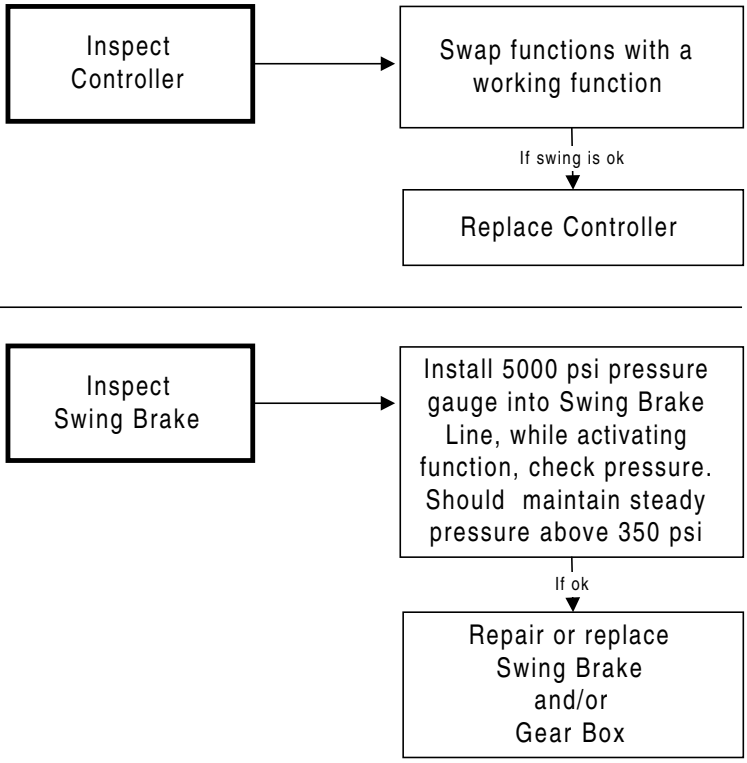

Step 3

Step 4

Swings faster one way than other

⚠DANGER

When the turn table rotates clockwise (cw) it will be moving toward you. Make sure you have room to step backward.

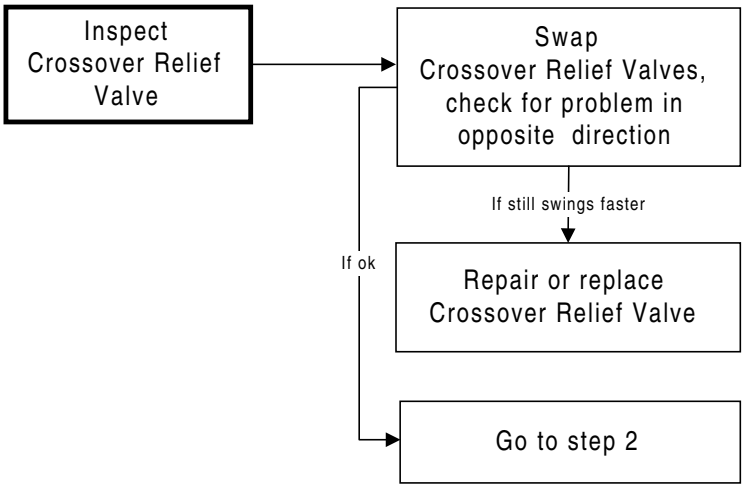

Step 1

Step 2

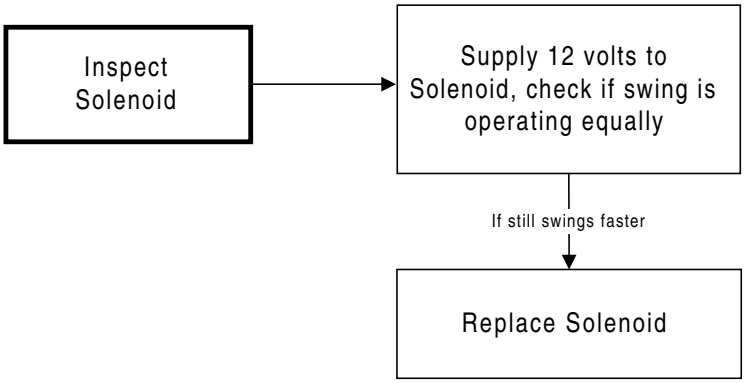

Swing brake will not hold

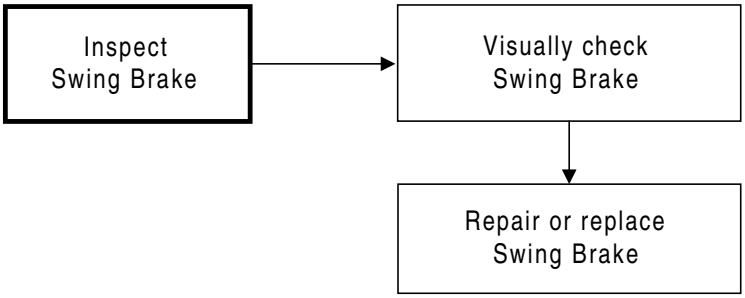

Step 1

Swings too slow

⚠CAUTION

Machine function will be moving when manual override is activated.

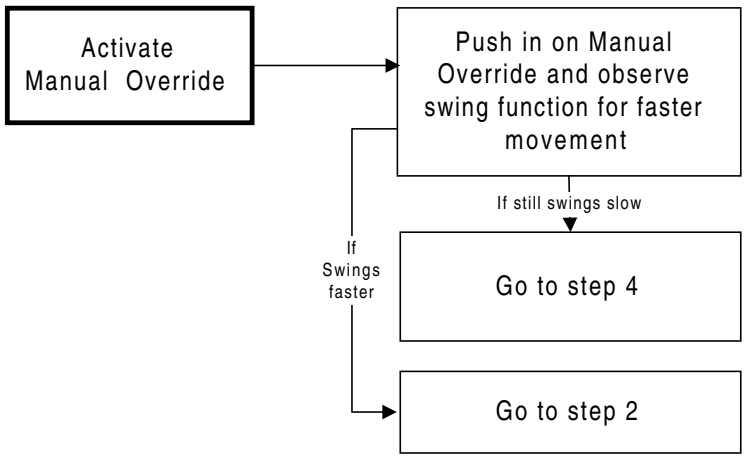

Step 1

Step 2

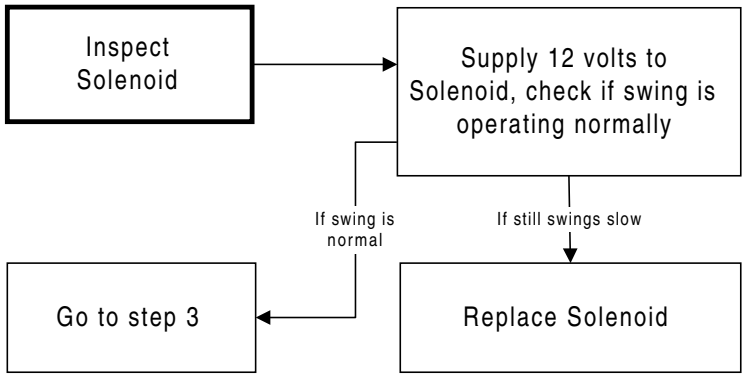

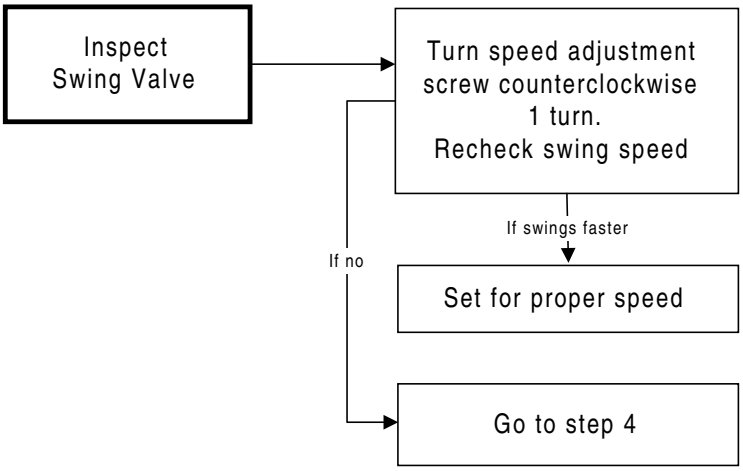
Inspect
Swing Valve
Turn speed adjustment screw counterclockwise 1 turn.
Recheck swing speed
If swings faster
If no
Set for proper speed
Go to step 4

Step 3

Step 4

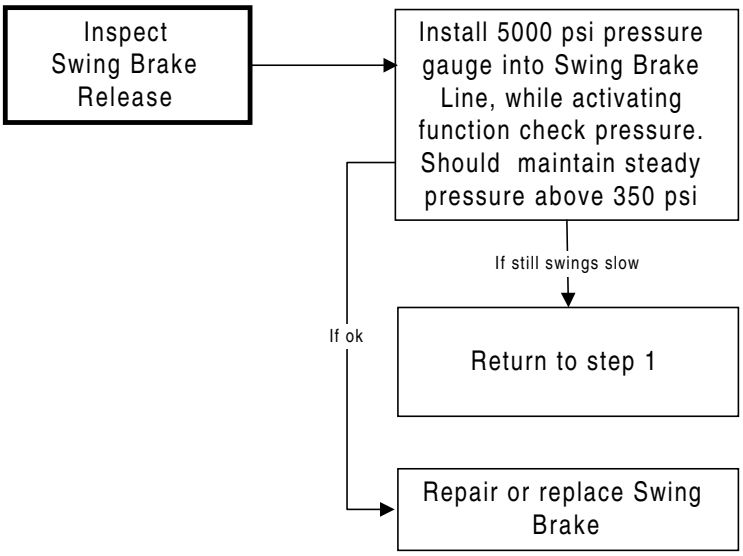
Inspect
Swing Brake
Release
Install 5000 psi pressure gauge into Swing Brake Line, while activating function check pressure.
Should maintain steady pressure above 350 psi
If still swings slow
If ok
Return to step 1
Repair or replace Swing Brake

SECTION SEVEN:
PLATFORM ROTATION SYSTEM DIAGNOSTICS

PLATFORM ROTATION SYSTEM DIAGNOSTICS

Chart 1

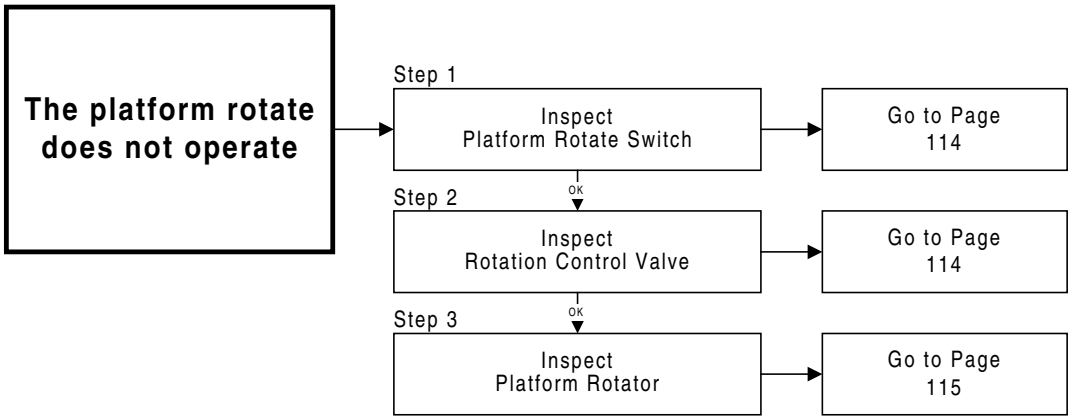

Chart 2

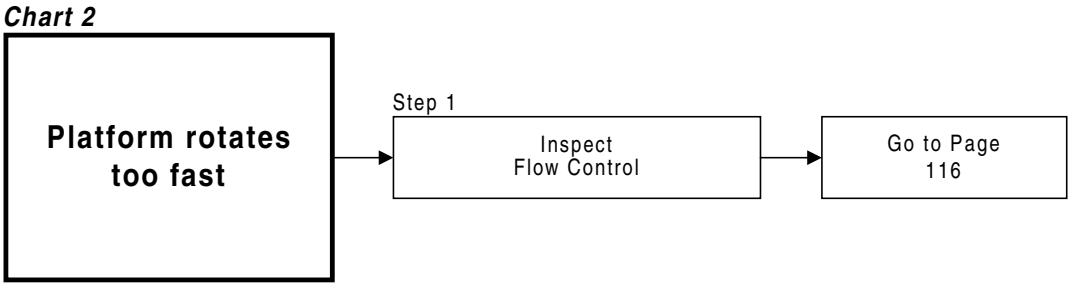

Chart 3

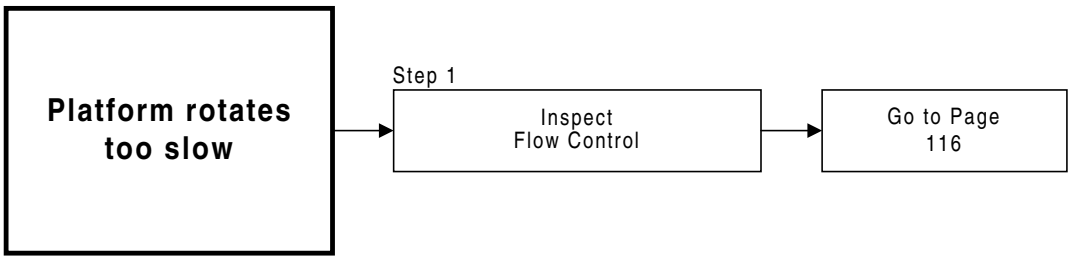

Chart 4

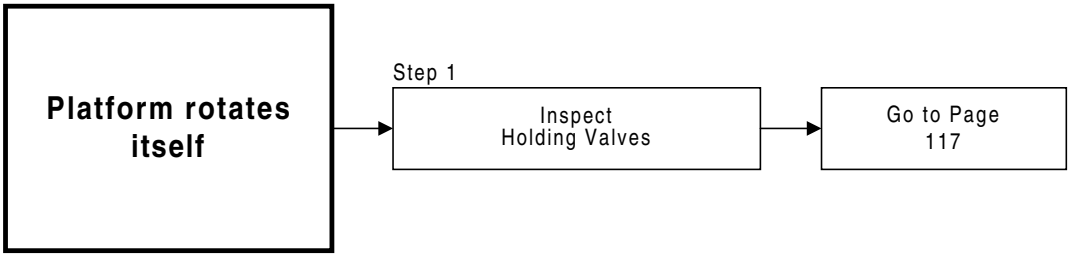

Platform rotate does not operate

⚠CAUTION

Machine function will be moving when manual override is activated.

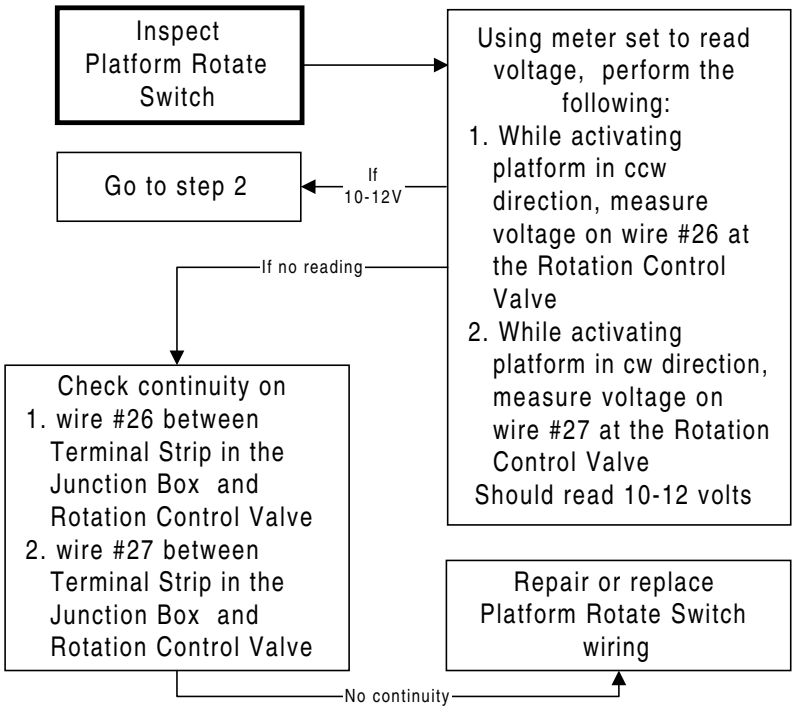

Step 1

Step 2

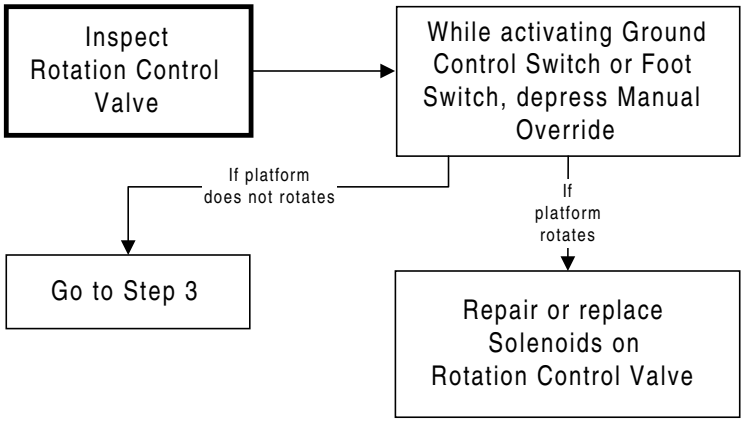

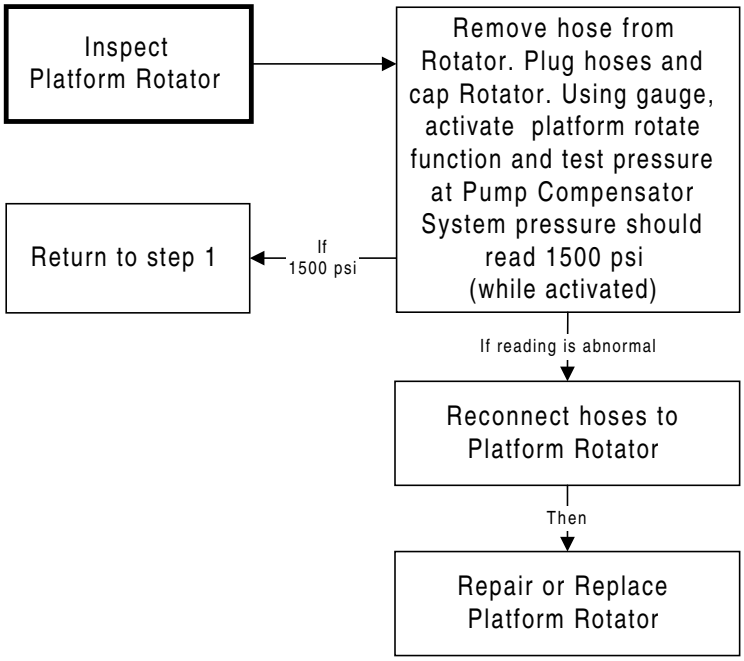
Inspect Platform Rotator
Remove hose from Rotator. Plug hoses and cap Rotator. Using gauge, activate platform rotate function and test pressure at Pump Compensator System pressure should read 1500 psi (while activated)
If 1500 psi
Return to step 1
If reading is abnormal
Reconnect hoses to Platform Rotator
Then
Repair or Replace Platform Rotator

Step 3

Platform rotates too fast

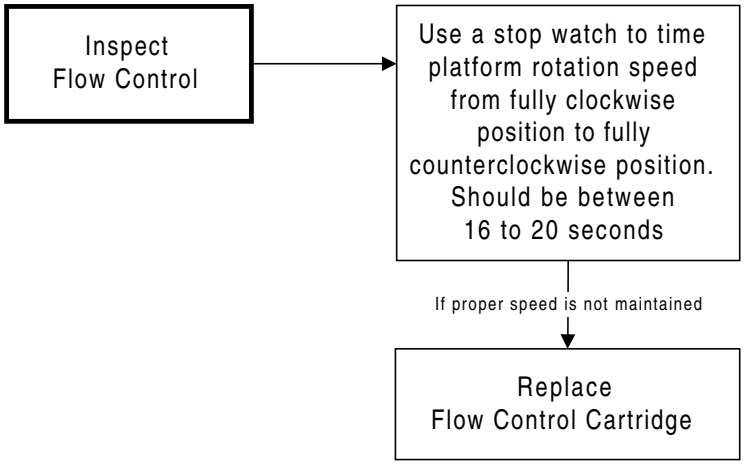

Step 1

Step 1

Platform rotates too slow

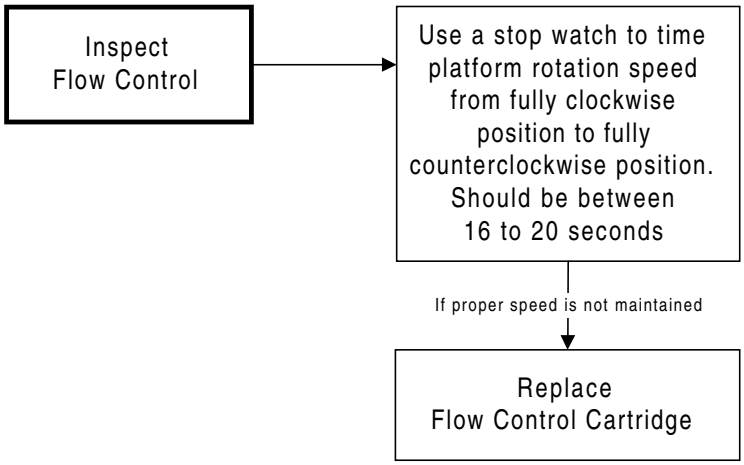

Platform rotates itself

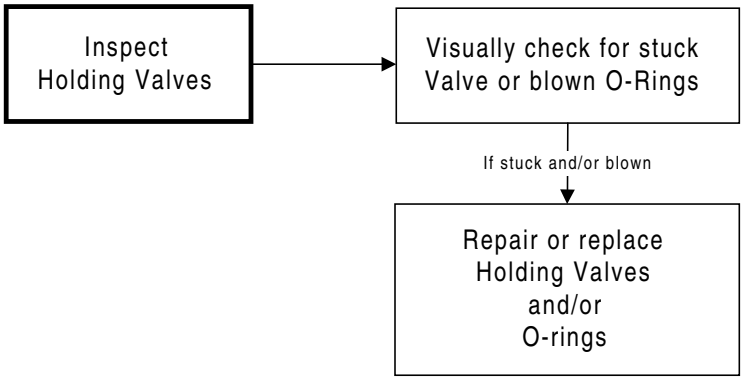

Step 1

SECTION EIGHT:
PLATFORM LEVELING SYSTEM DIAGNOSTICS

PLATFORM LEVELING SYSTEM DIAGNOSTICS

Chart 1

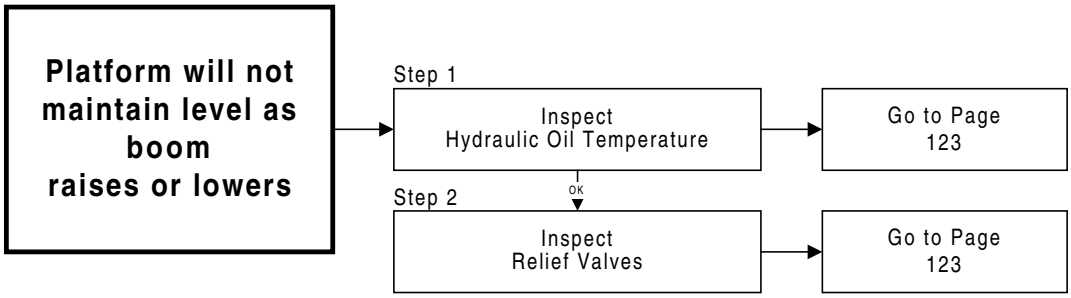

Chart 2

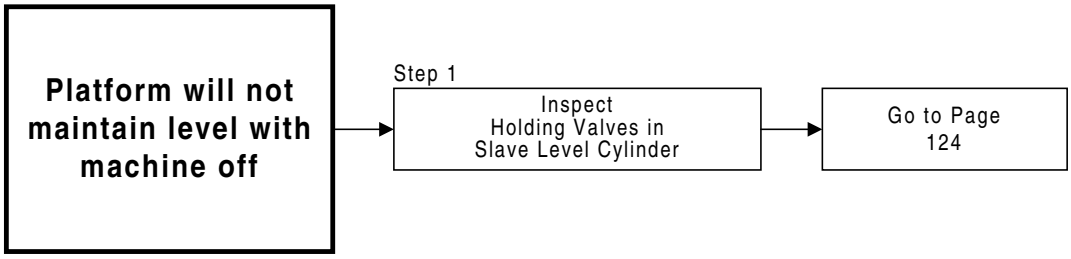

Chart 3

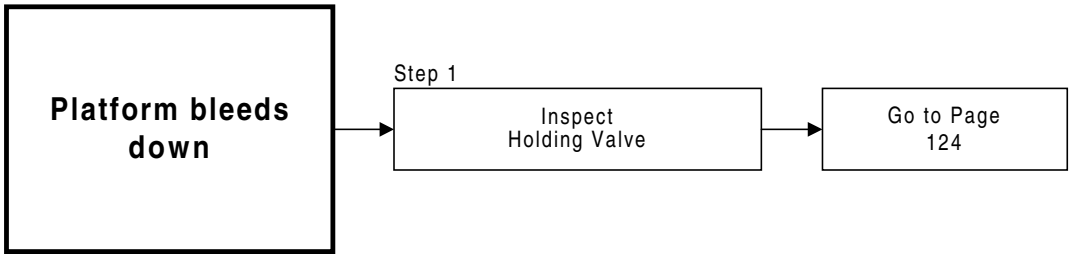

Chart 4

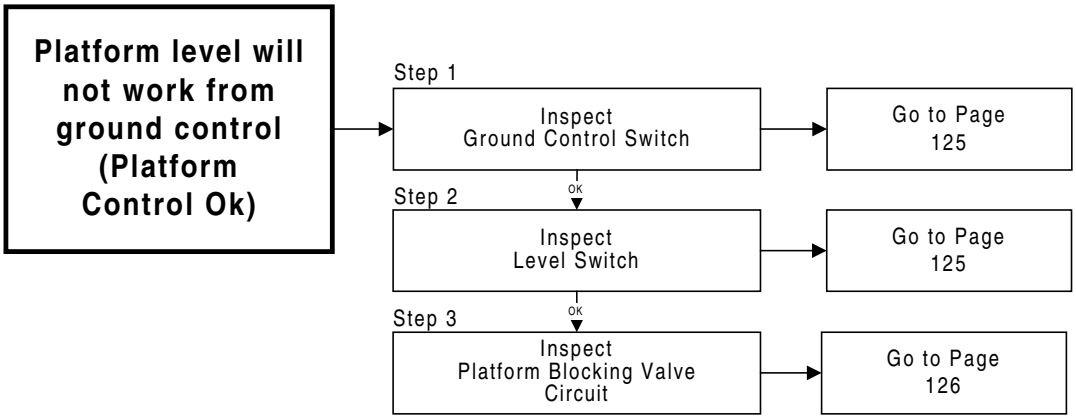

Chart 5

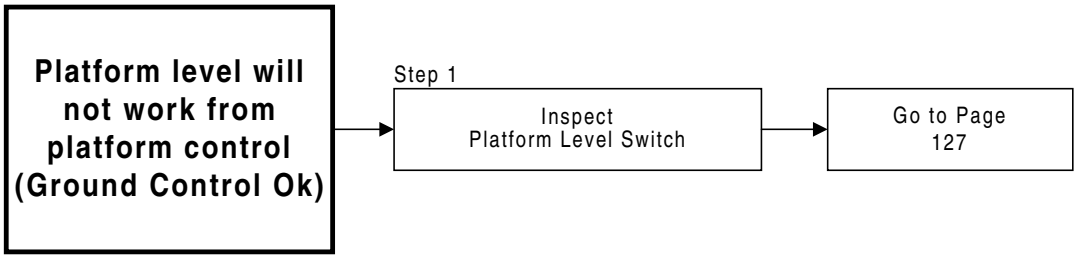

Chart 6

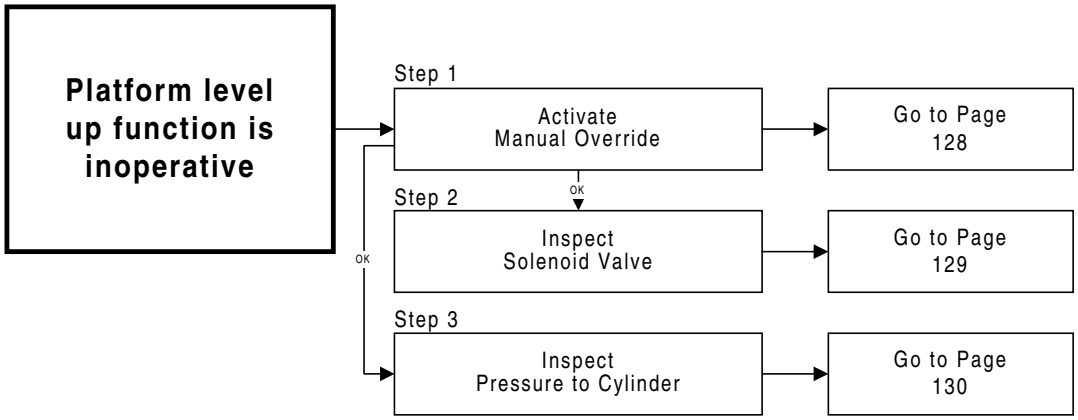

Chart 7

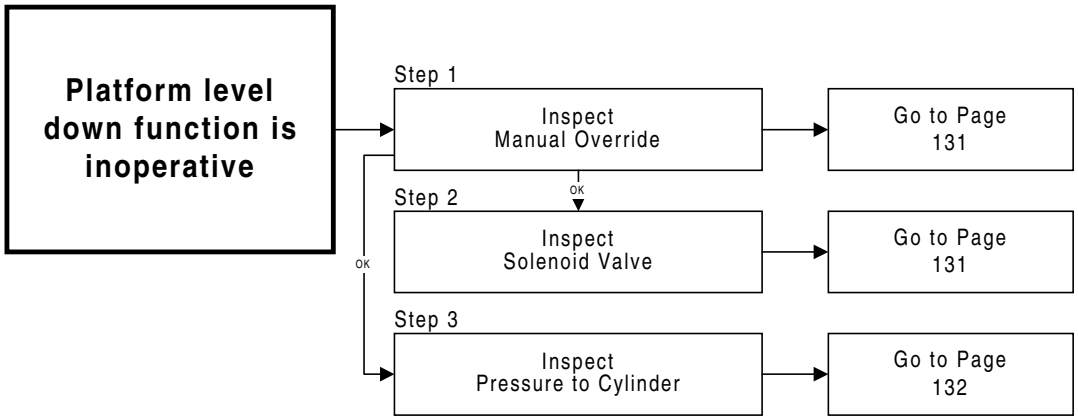

The platform does not maintain level as boom raises or lowers

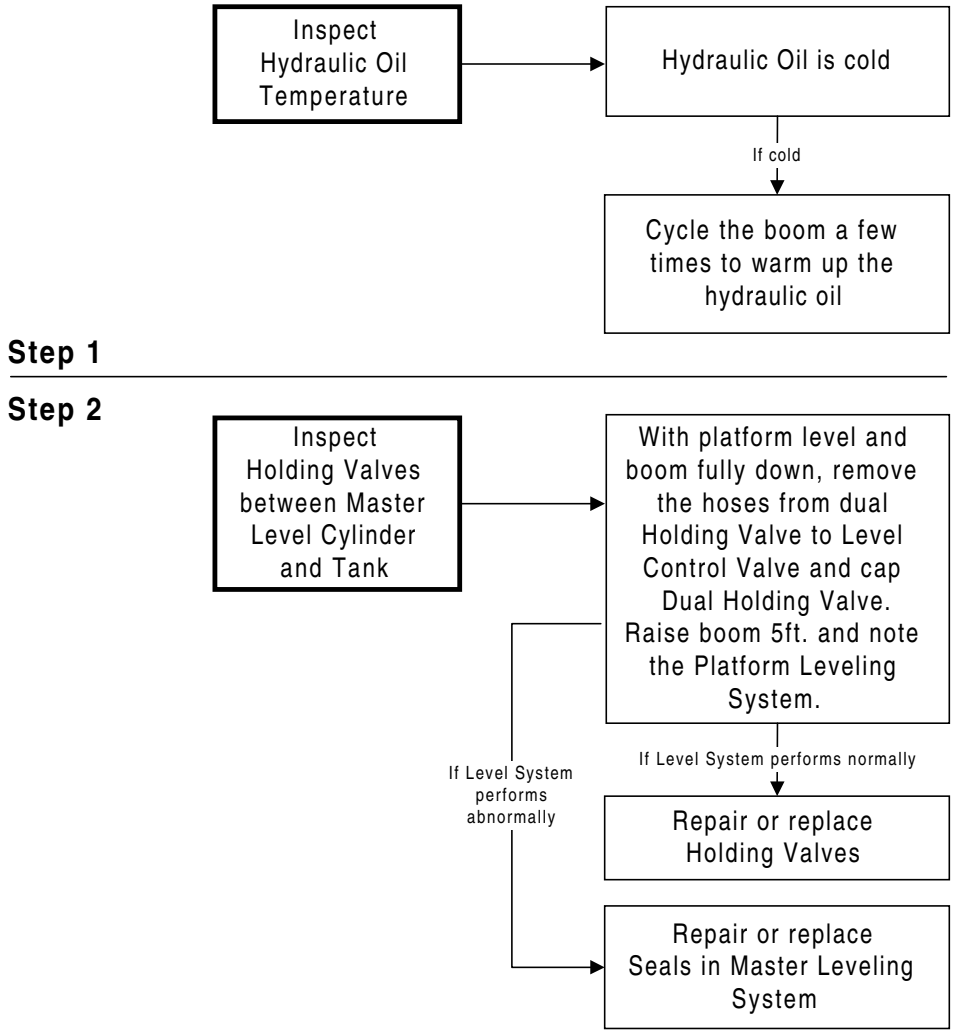

The platform will not maintain level with machine off

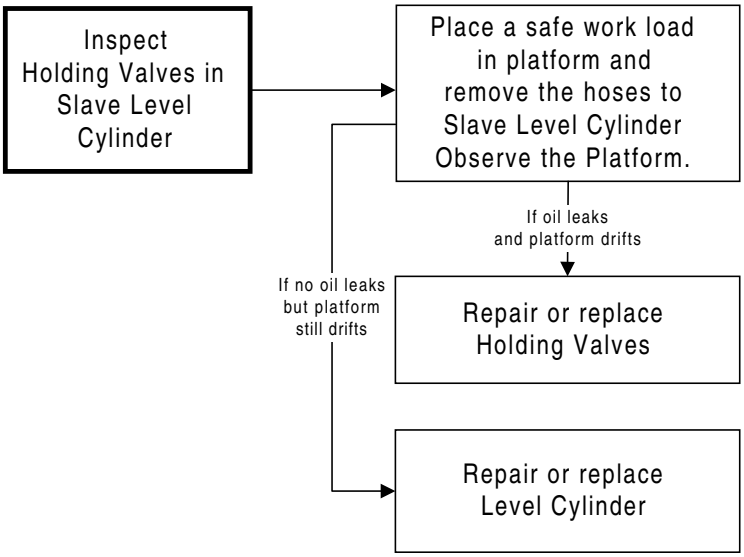

Step 1

Platform bleeds down

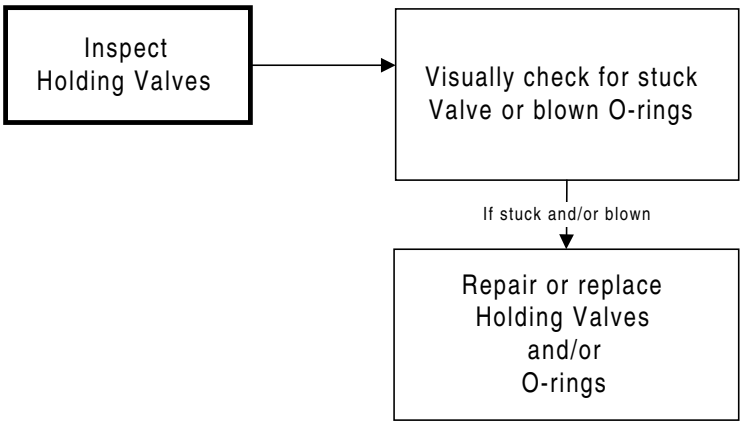

Step 1

Platform level will not work from ground control (Platform Control Ok)

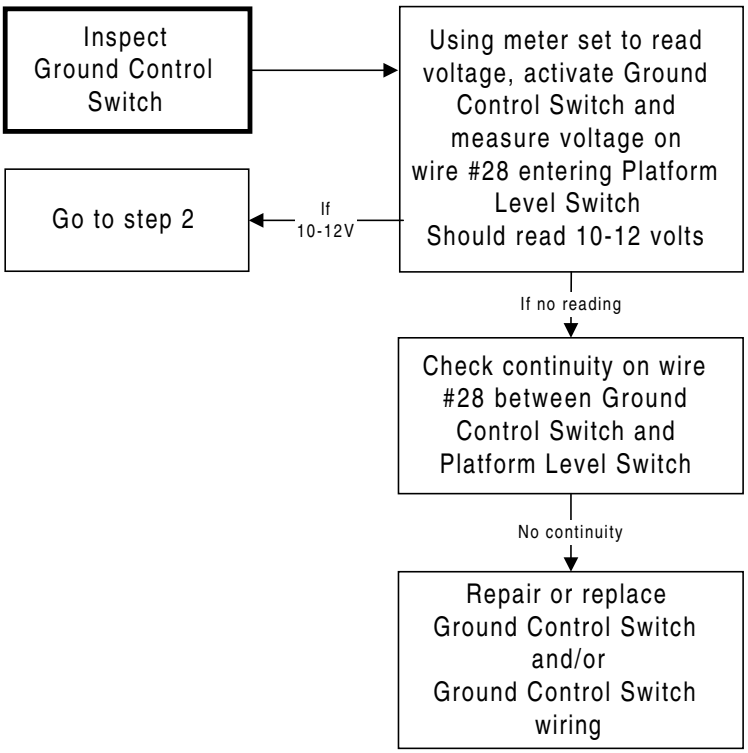

Step 1

Step 2

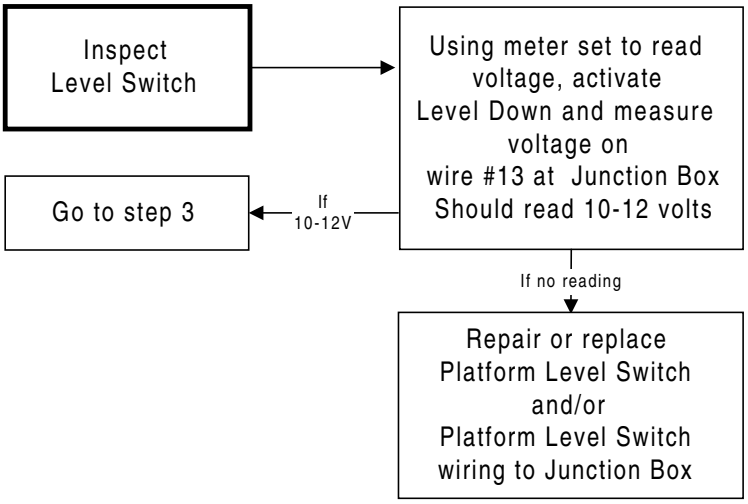

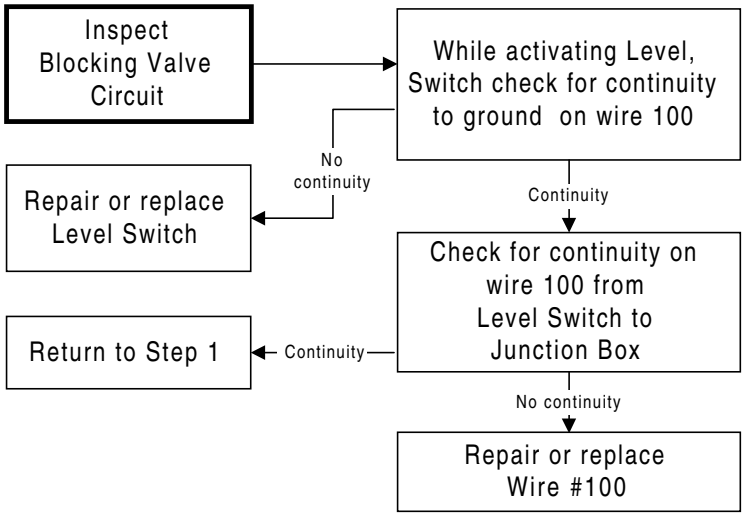
Inspect Blocking Valve Circuit
While activating Level, Switch check for continuity to ground on wire 100
No continuity
Repair or replace Level Switch
Continuity
Check for continuity on wire 100 from Level Switch to Junction Box
Return to Step 1
Continuity
No continuity
Repair or replace Wire #100

Step 3

Platform level will not work from platform control (Ground Control Ok)

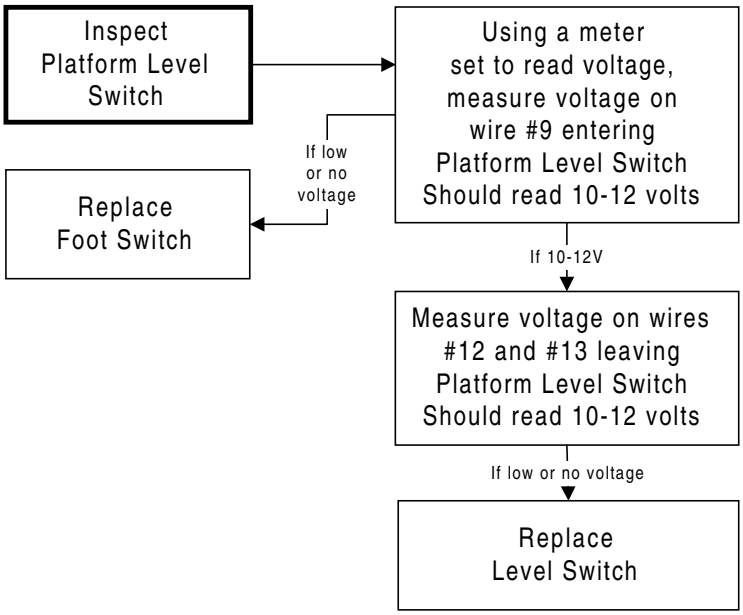

Step 1

Platform level up function is inoperative

⚠CAUTION

Machine function will be moving when manual override is activated.

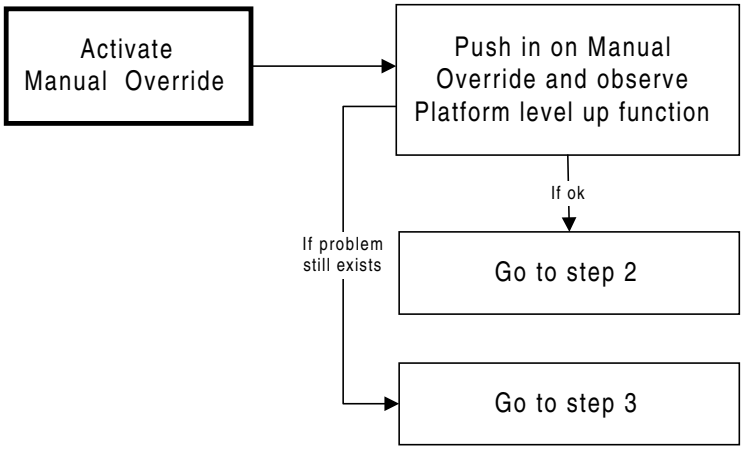

Step 1

Step 2

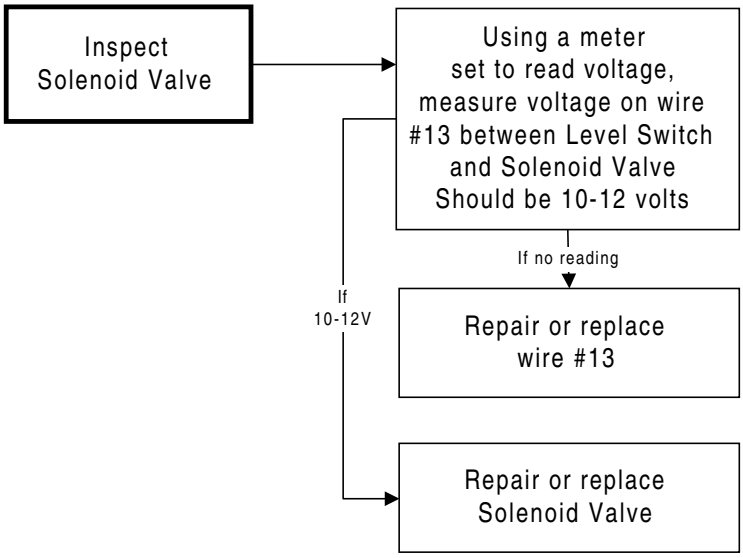

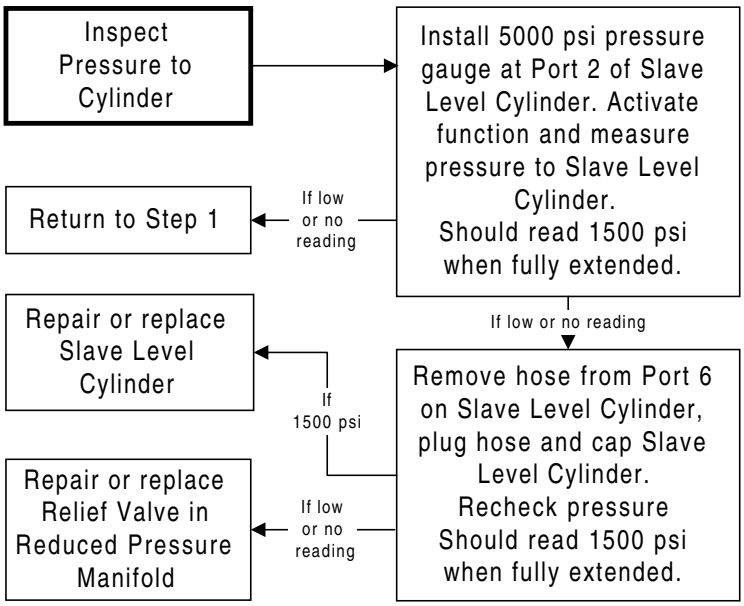
Inspect Pressure to Cylinder
Install 5000 psi pressure gauge at Port 2 of Slave Level Cylinder. Activate function and measure pressure to Slave Level Cylinder. Should read 1500 psi when fully extended.
If low or no reading
Return to Step 1
If low or no reading
Remove hose from Port 6 on Slave Level Cylinder, plug hose and cap Slave Level Cylinder. Recheck pressure Should read 1500 psi when fully extended.
If 1500 psi
Repair or replace Slave Level Cylinder
If low or no reading
Repair or replace Relief Valve in Reduced Pressure Manifold

Step 3

Platform level down function is inoperative

⚠CAUTION

Machine function will be moving when manual override is activated.

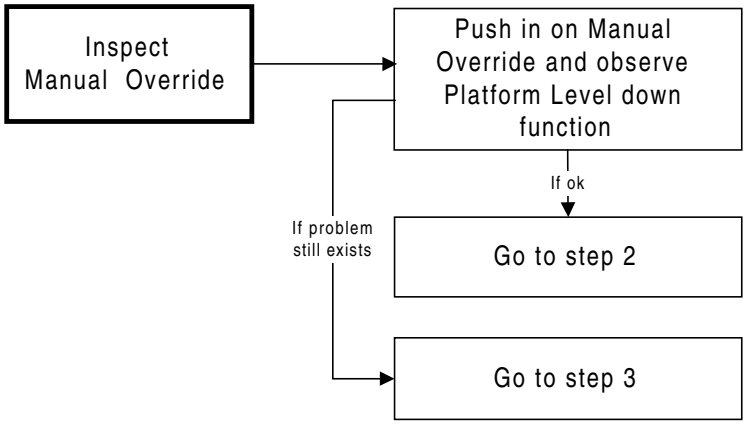

Step 1

Step 2

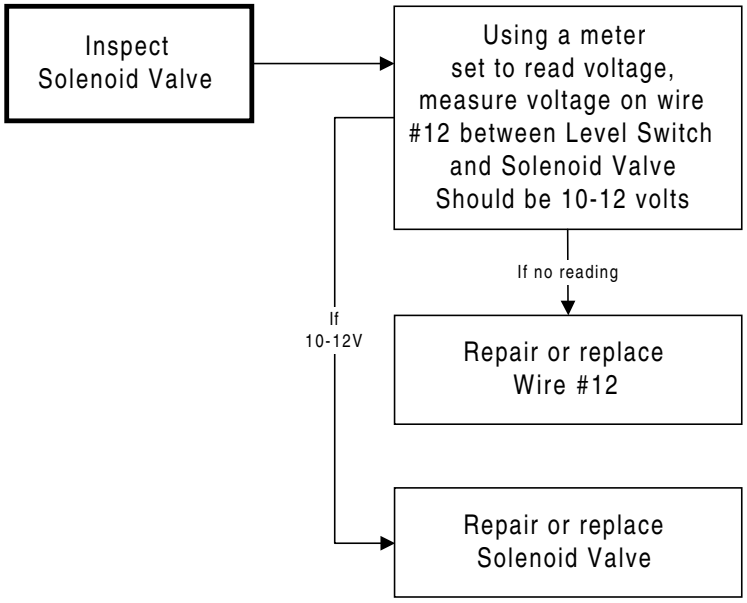

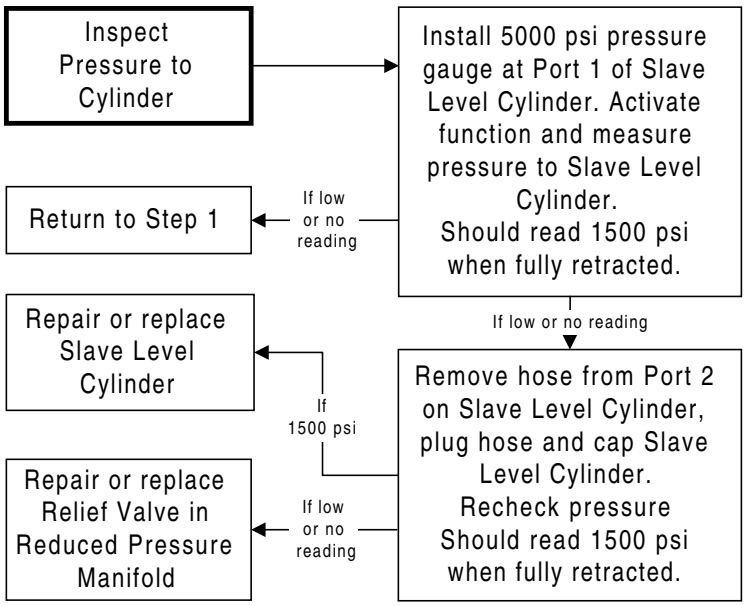
Inspect Pressure to Cylinder
Install 5000 psi pressure gauge at Port 1 of Slave Level Cylinder. Activate function and measure pressure to Slave Level Cylinder. Should read 1500 psi when fully retracted.
If low or no reading
Return to Step 1
If low or no reading
Remove hose from Port 2 on Slave Level Cylinder, plug hose and cap Slave Level Cylinder. Recheck pressure Should read 1500 psi when fully retracted.
If 1500 psi
Repair or replace Slave Level Cylinder
If low or no reading
Repair or replace Relief Valve in Reduced Pressure Manifold

Step 3

SECTION NINE:
BOOM ELEVATION SYSTEM DIAGNOSTICS

Chart 1

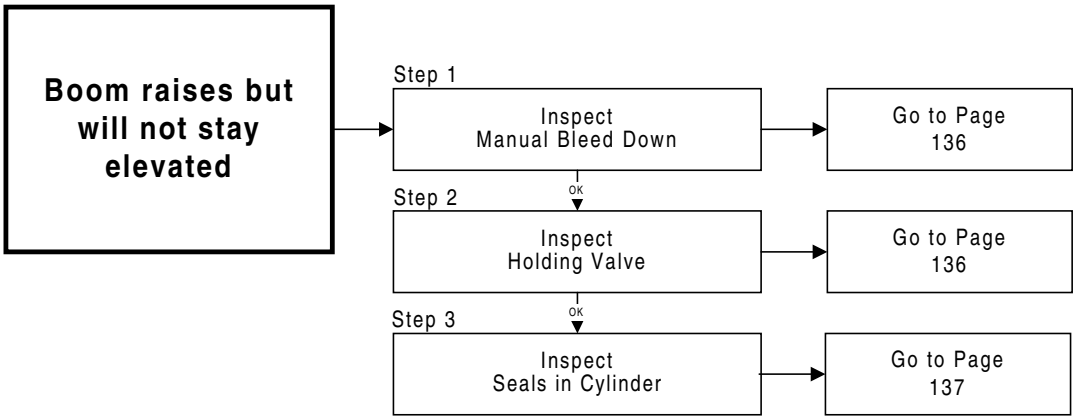

Chart 2

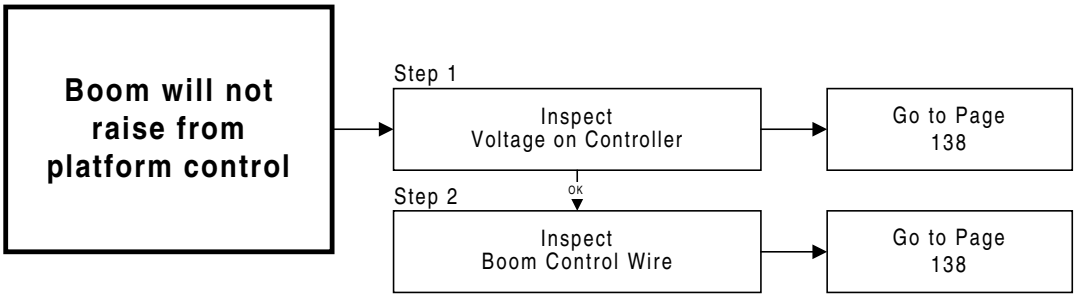

Chart 3

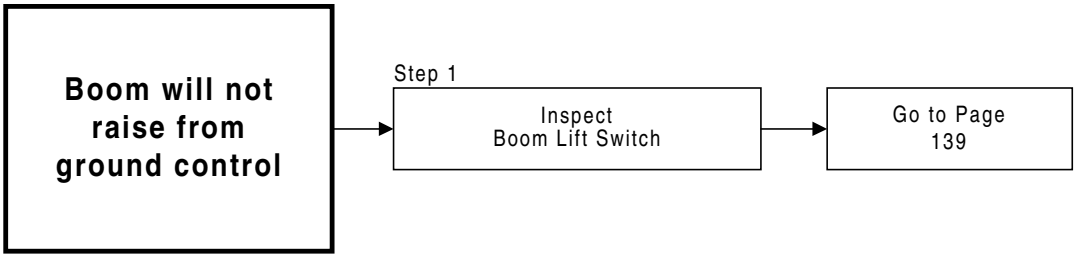

Chart 4

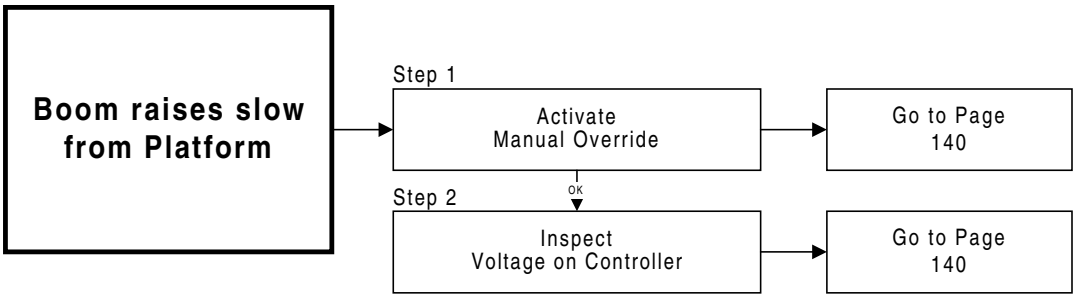

Boom raises but will not stay elevated

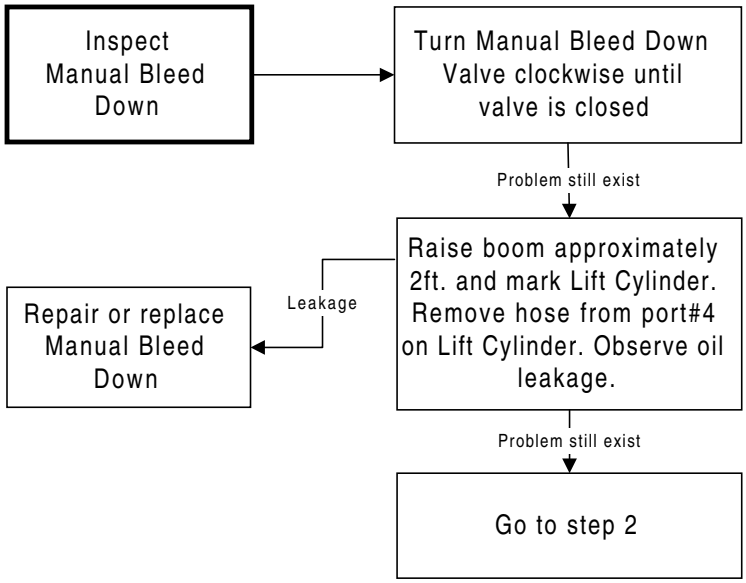

Step 1

Step 2

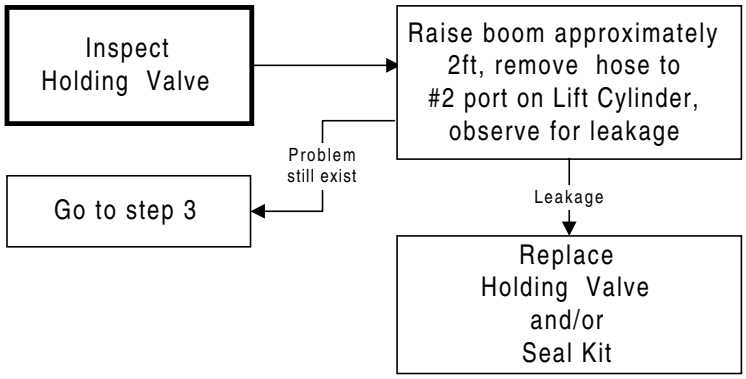

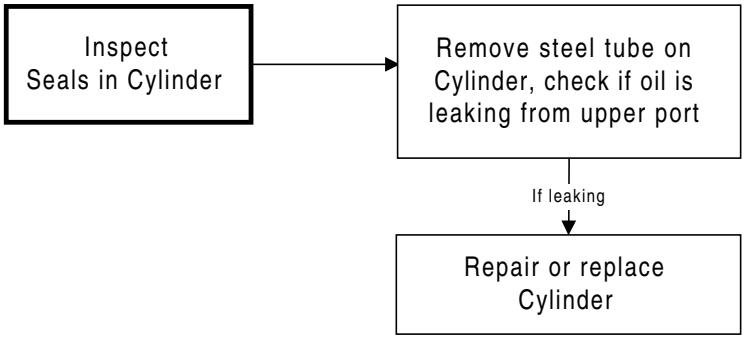
Inspect
Seals in Cylinder
Remove steel tube on
Cylinder, check if oil is
leaking from upper port
If leaking
Repair or replace
Cylinder

Step 3

Boom will not raise from platform control (Ground Control Ok)

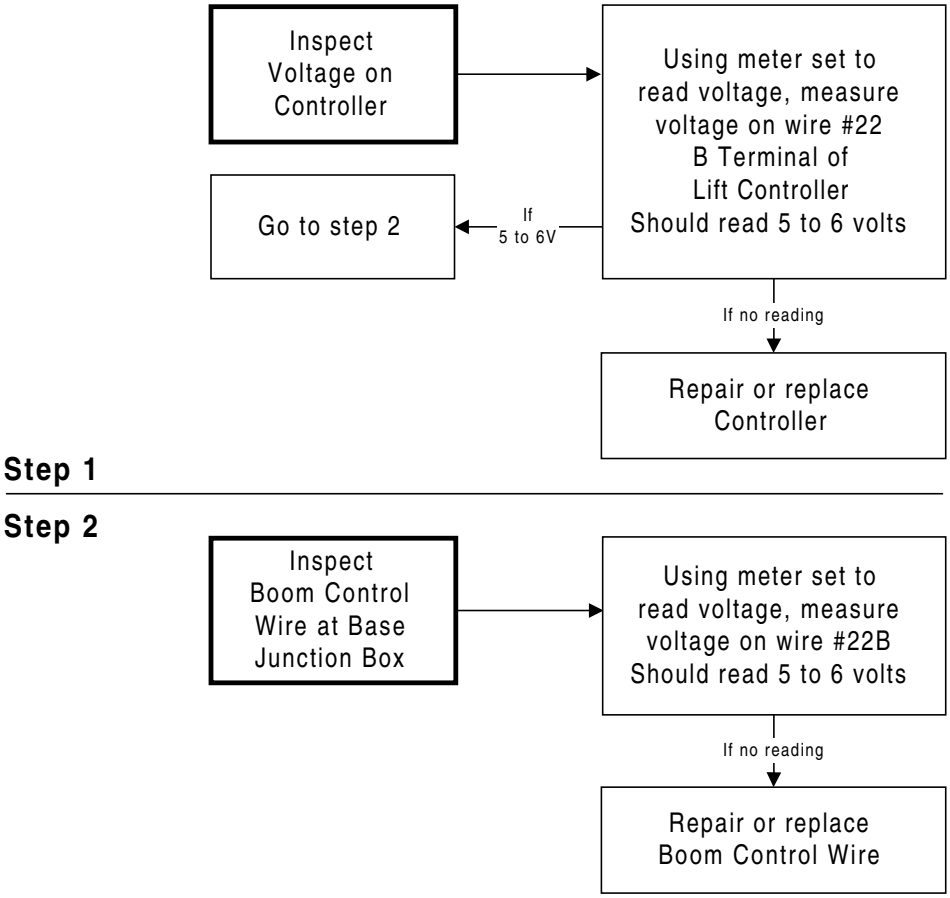

Boom will not raise from ground control (Platform Control Ok)

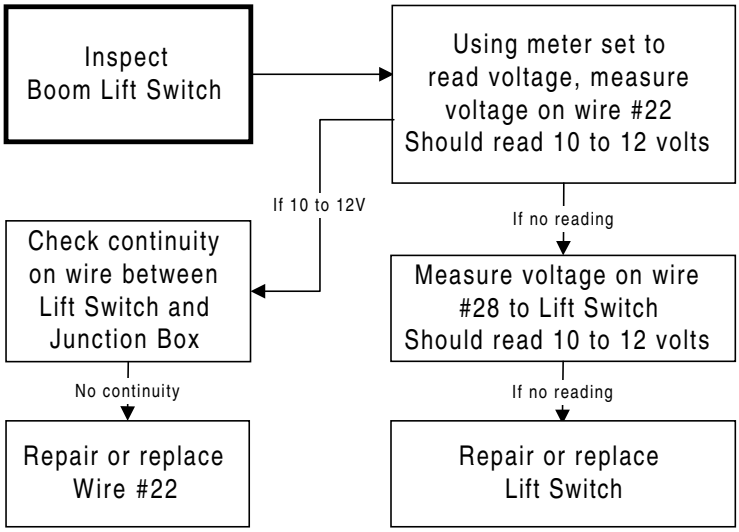

Step 1

Boom raises slow from platform

⚠CAUTION

Machine function will be moving when manual override is activated.

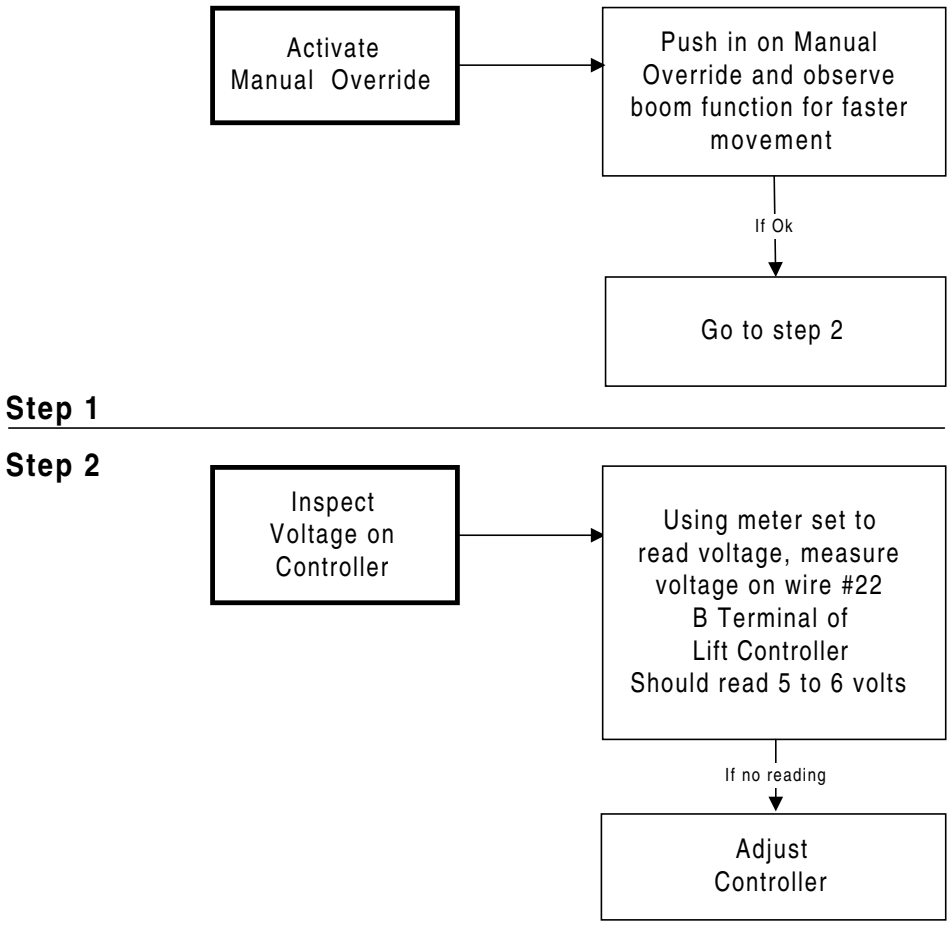

SECTION TEN:
TELESCOPE SYSTEM DIAGNOSTICS

Chart 1

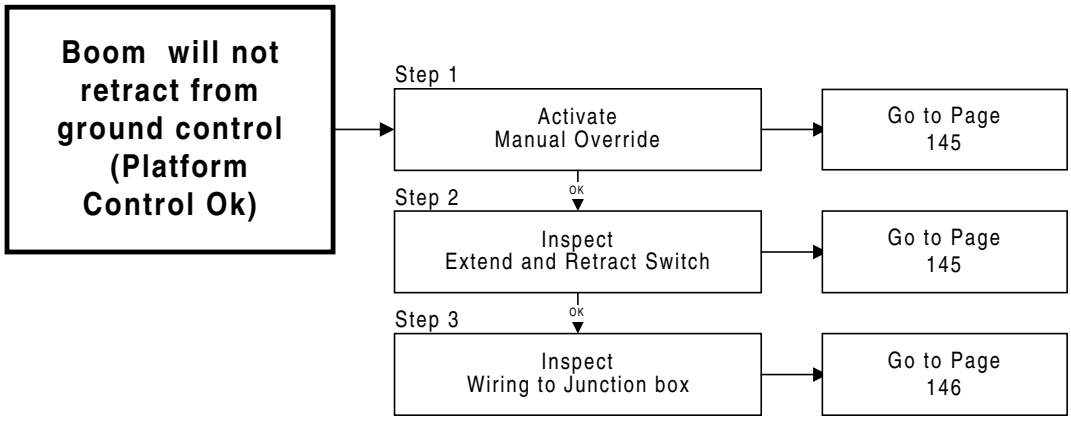

Chart 2

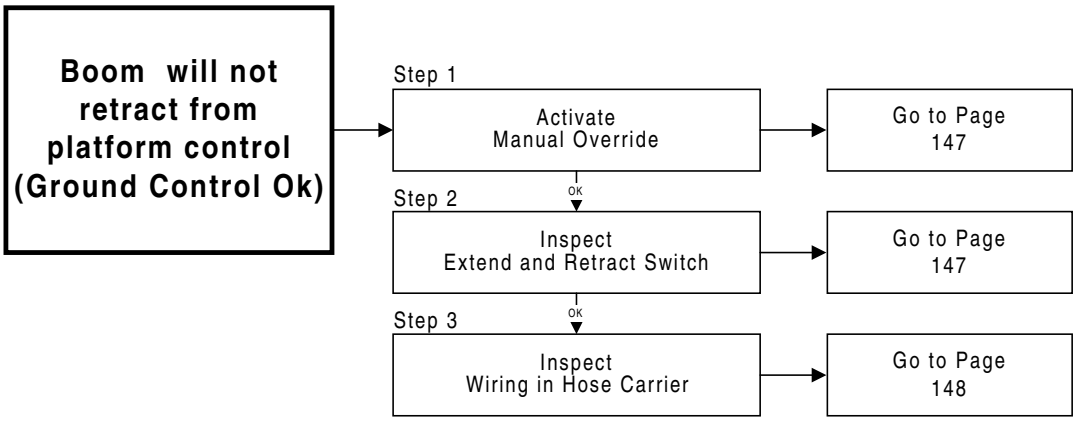

Chart 3

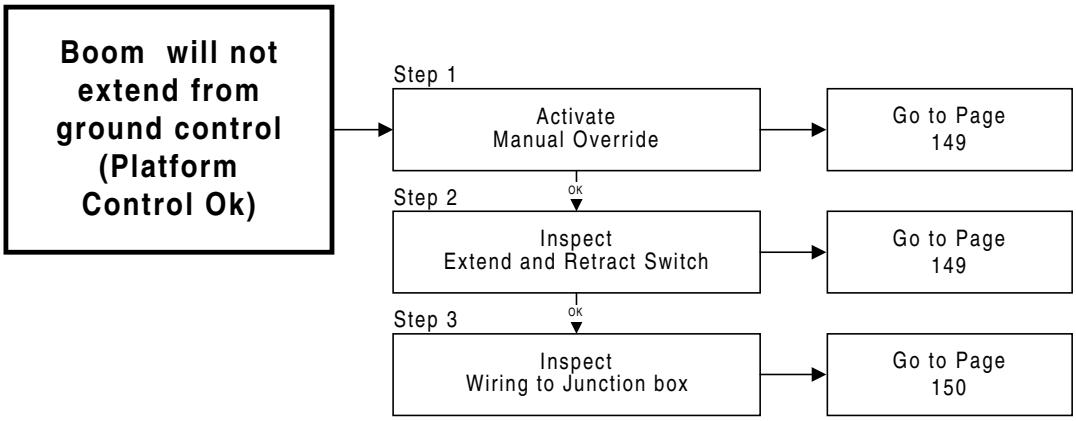

Chart 4

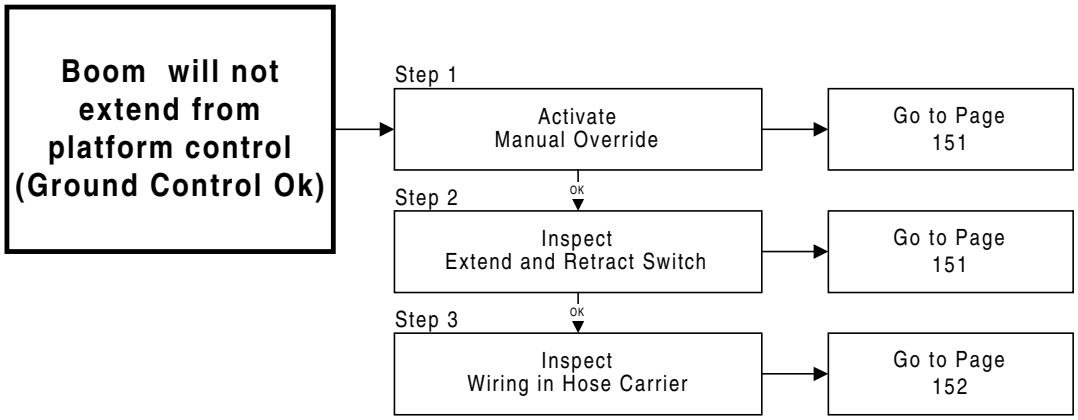

Chart 5

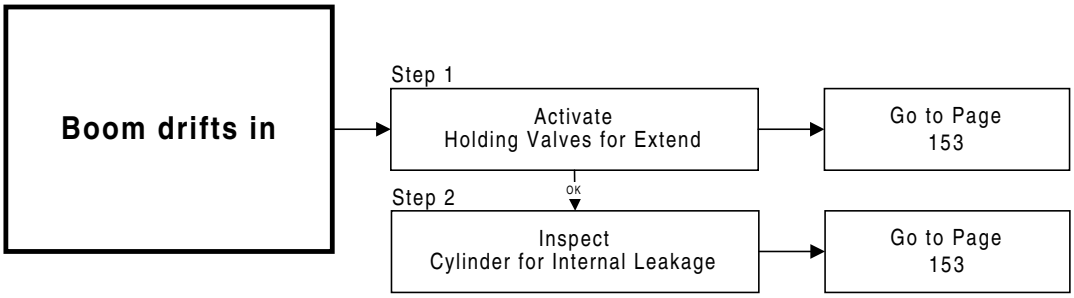

Boom will not retract from ground control (Platform Control Ok)

⚠CAUTION

Machine function will be moving when manual override is activated.

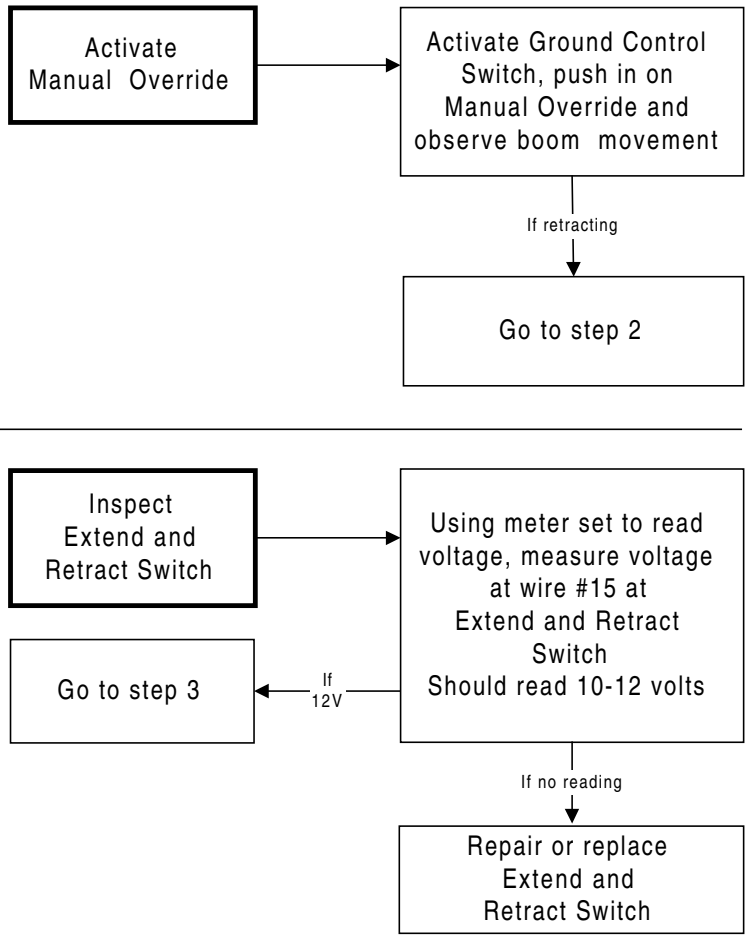

Step 1

Step 2

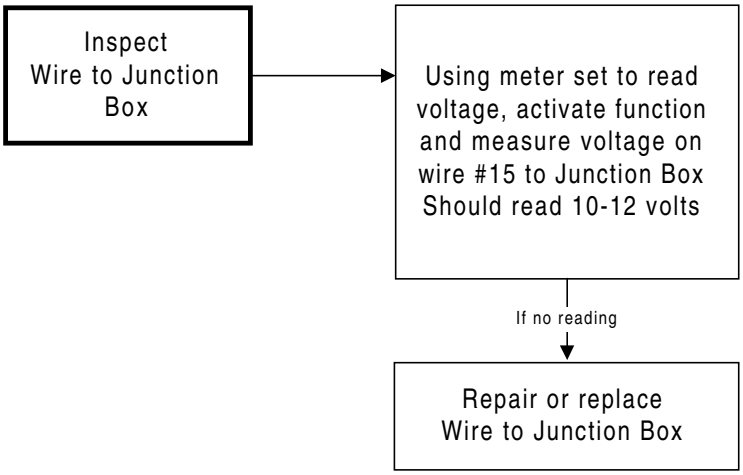
Inspect
Wire to Junction
Box
Using meter set to read
voltage, activate function
and measure voltage on
wire #15 to Junction Box
Should read 10-12 volts
If no reading
Repair or replace
Wire to Junction Box

Step 3

Boom will not retract from platform control (Ground Control Ok)

⚠CAUTION

Machine function will be moving when manual override is activated.

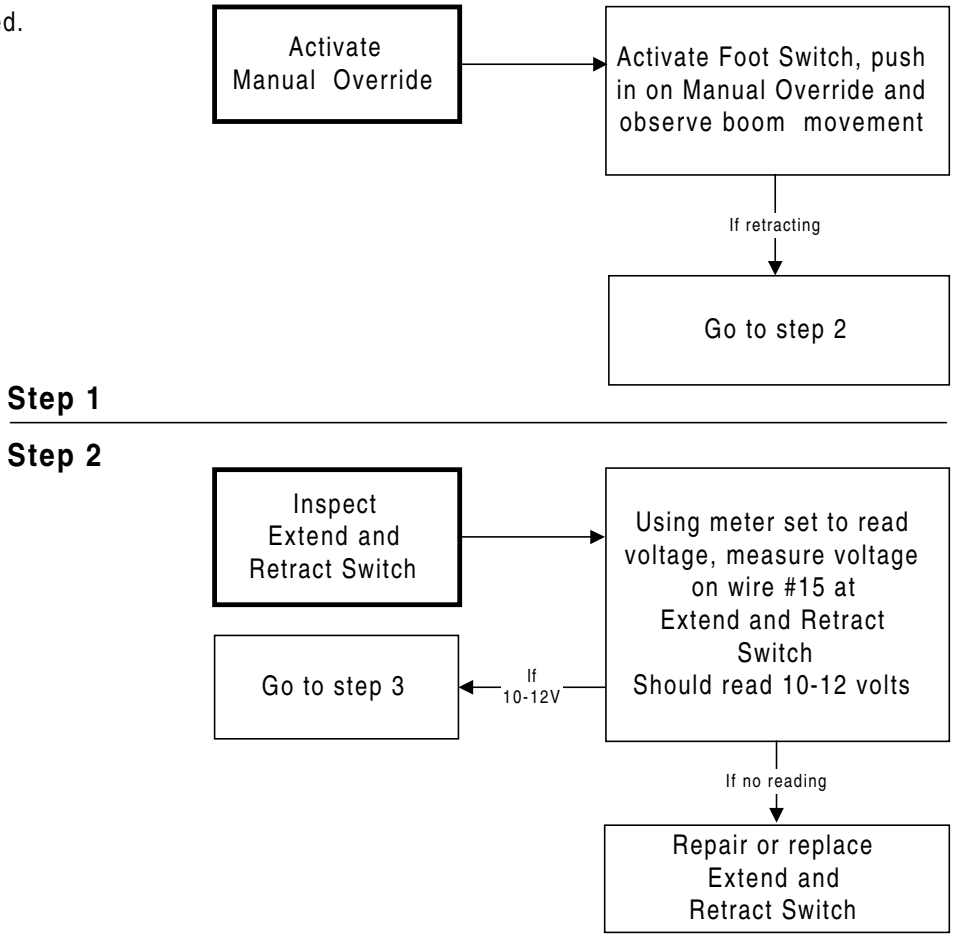

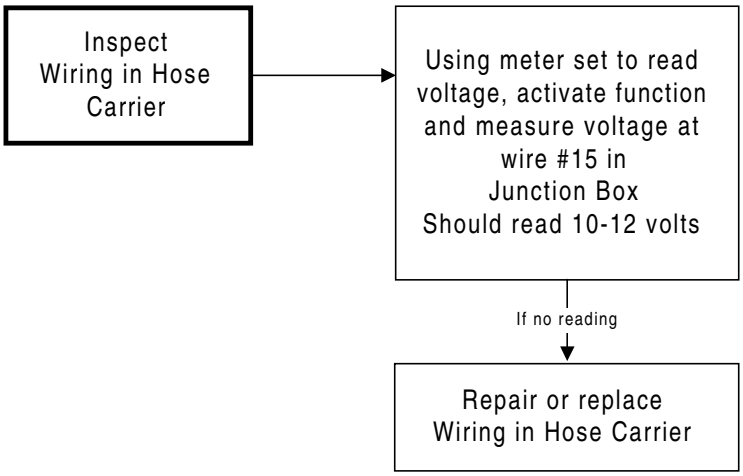
Inspect
Wiring in Hose
Carrier
Using meter set to read
voltage, activate function
and measure voltage at
wire #15 in
Junction Box
Should read 10-12 volts
If no reading
Repair or replace
Wiring in Hose Carrier

Step 3

Boom will not extend from ground control (Platform Control Ok)

⚠CAUTION

Machine function will be moving when manual override is activated.

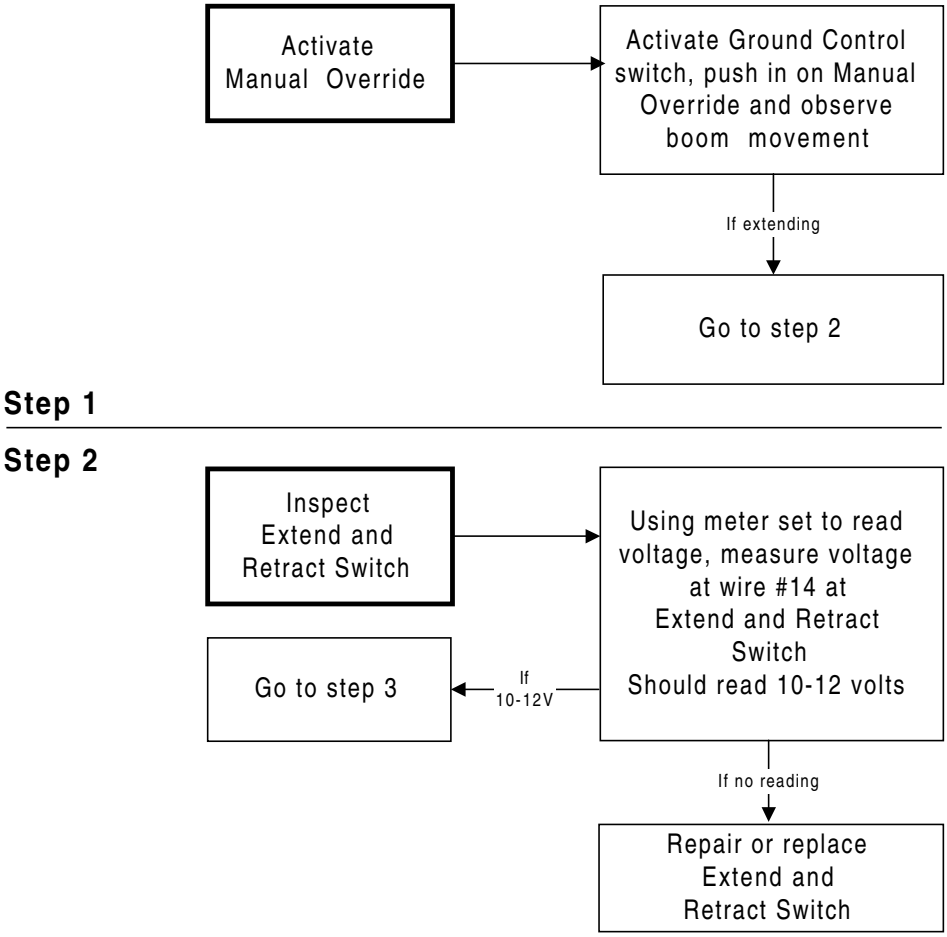

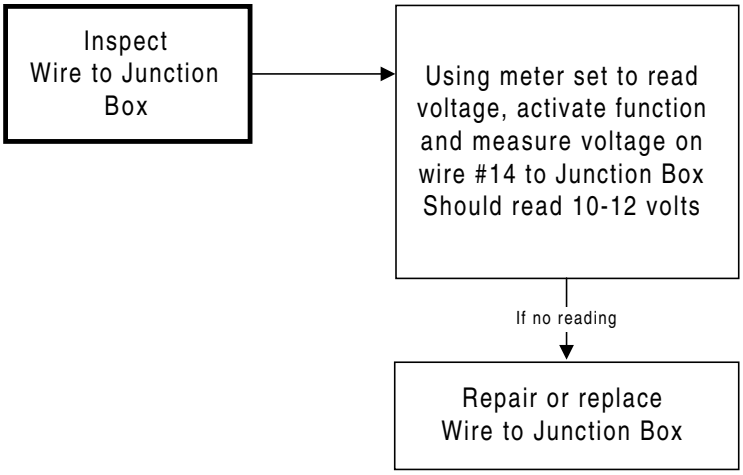
Inspect
Wire to Junction
Box
Using meter set to read
voltage, activate function
and measure voltage on
wire #14 to Junction Box
Should read 10-12 volts
If no reading
Repair or replace
Wire to Junction Box

Step 3

Boom will not extend from platform control (Ground Control Ok)

⚠CAUTION

Machine function will be moving when manual override is activated.

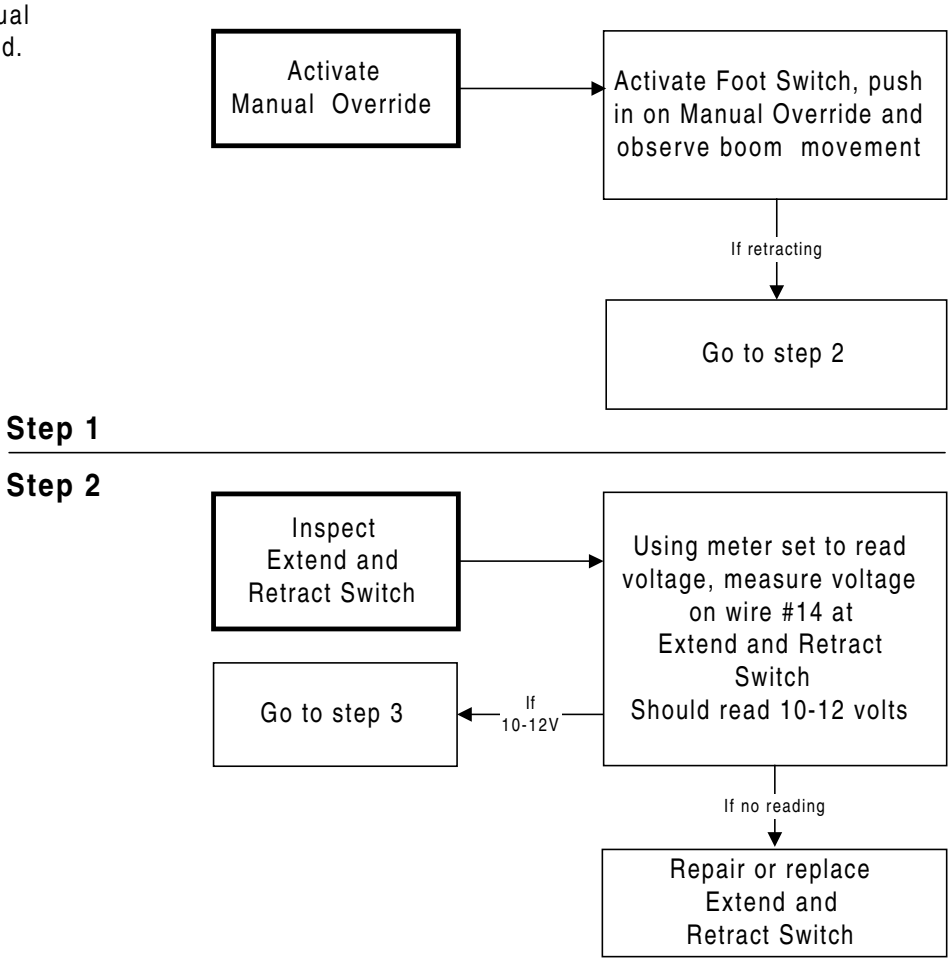

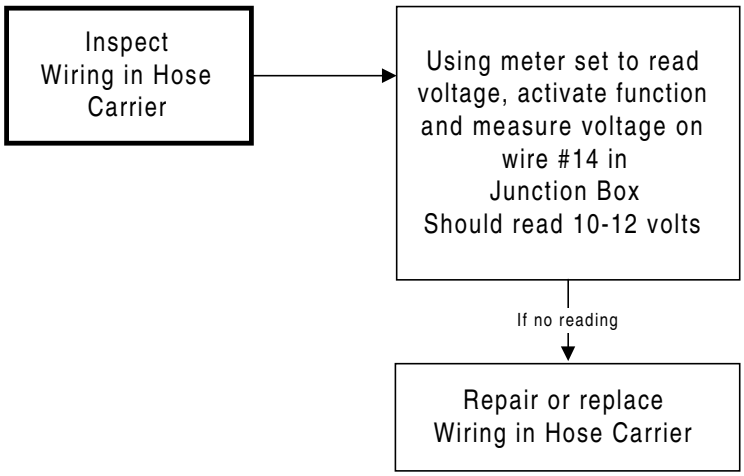
Inspect
Wiring in Hose
Carrier
Using meter set to read
voltage, activate function
and measure voltage on
wire #14 in
Junction Box
Should read 10-12 volts
If no reading
Repair or replace
Wiring in Hose Carrier

Step 3

Boom drifts in

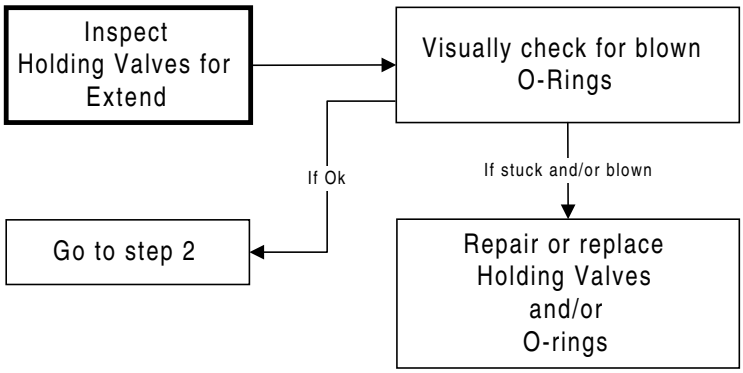

Step 1

Step 2

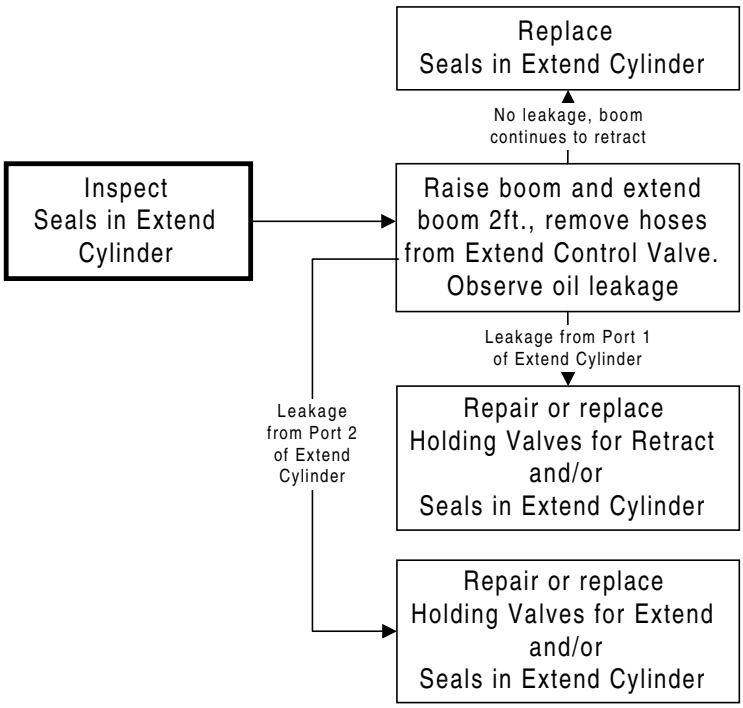

SECTION ELEVEN:
FUEL SYSTEM DIAGNOSTICS

Chart 1

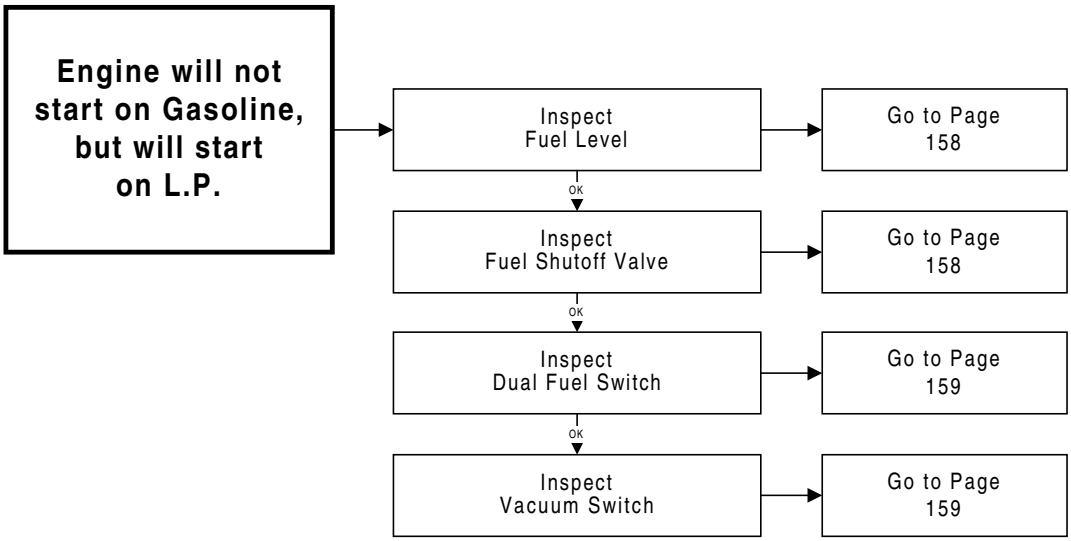

Chart 2

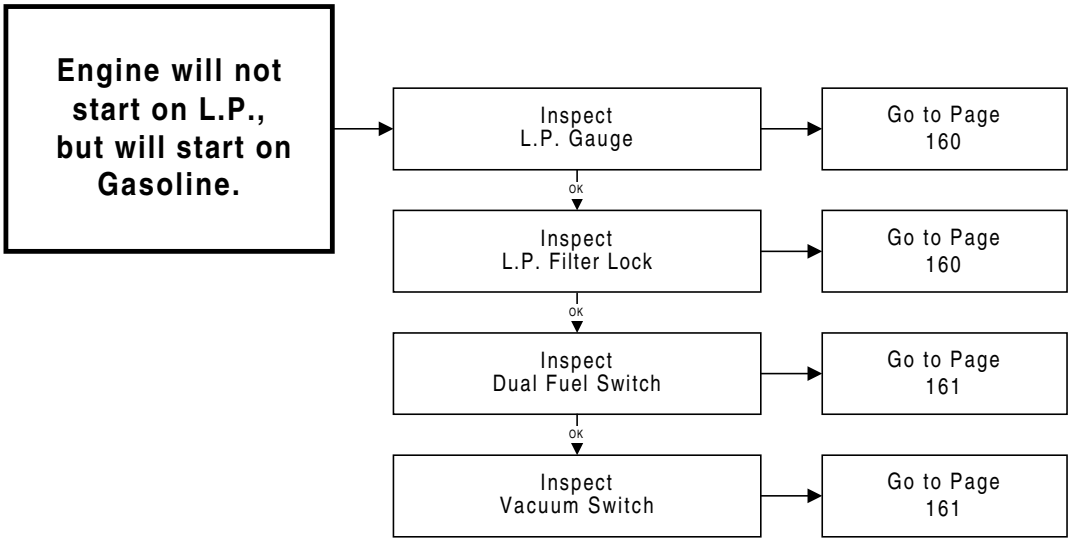

Engine will not start on Gasoline, but will start on L.P.

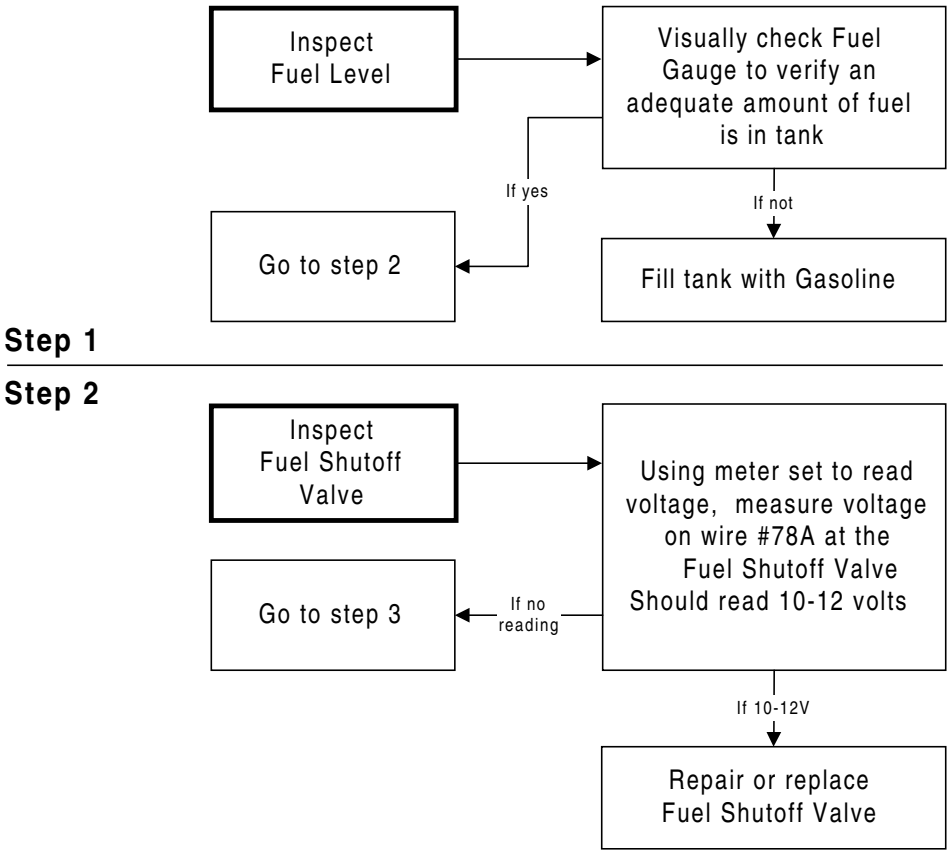

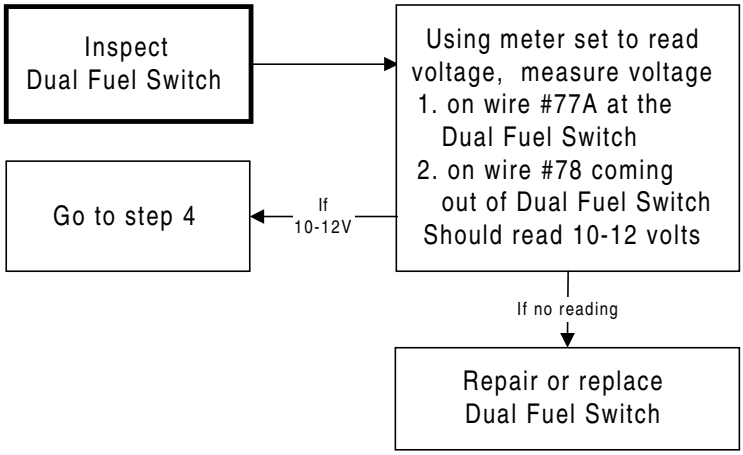
Inspect
Dual Fuel Switch
Using meter set to read voltage, measure voltage
1. on wire #77A at the Dual Fuel Switch
2. on wire #78 coming out of Dual Fuel Switch
Should read 10-12 volts
Go to step 4
If
10-12V
If no reading
Repair or replace
Dual Fuel Switch

Step 3

Step 4

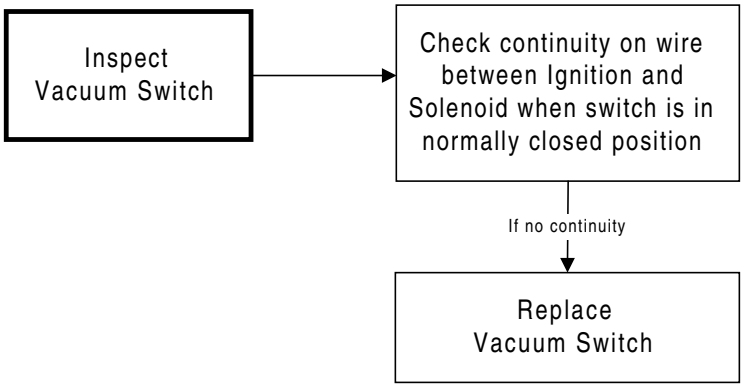
Inspect
Vacuum Switch
Check continuity on wire between Ignition and Solenoid when switch is in normally closed position
If no continuity
Replace
Vacuum Switch

Engine will not start on L.P., but will start on Gasoline.

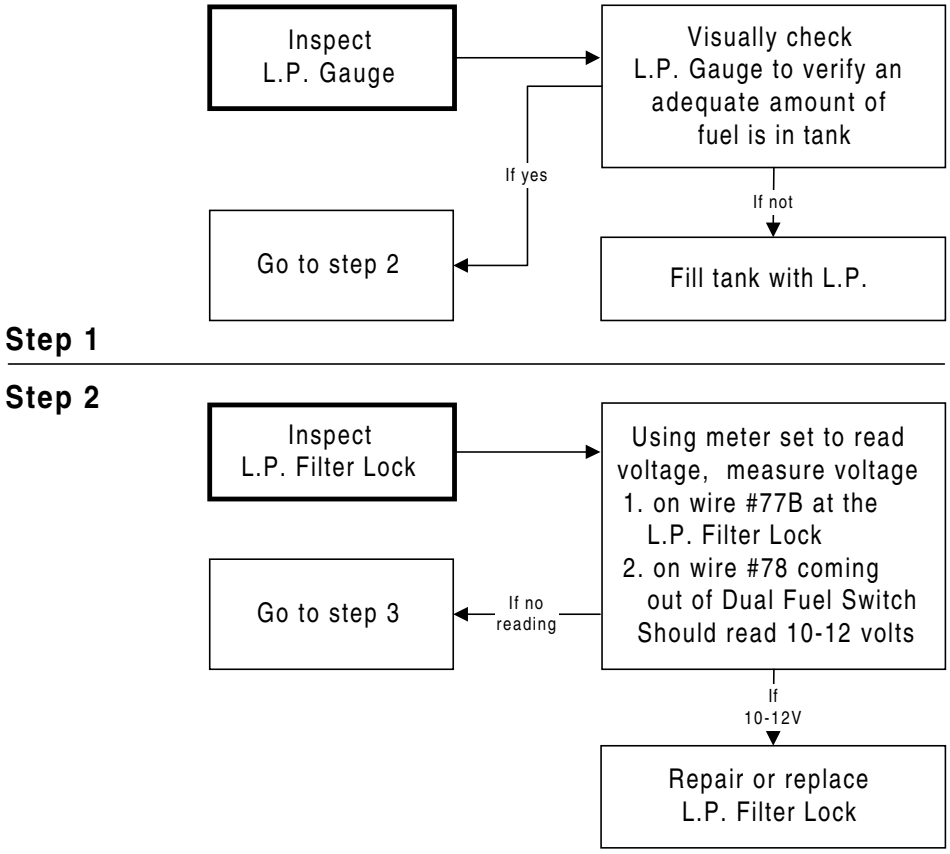

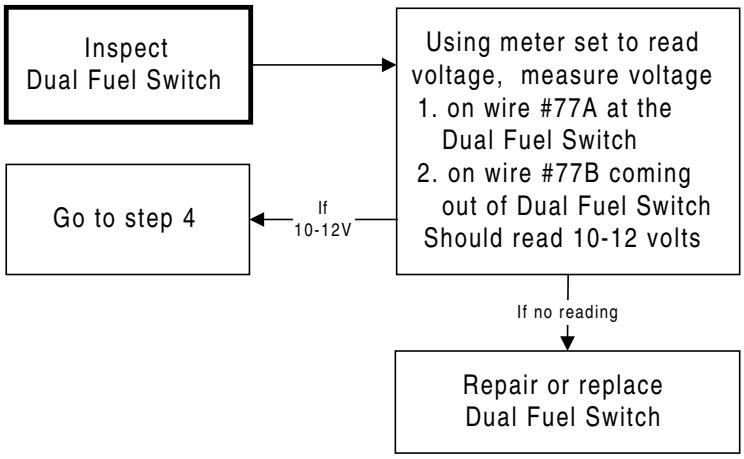
Inspect
Dual Fuel Switch
Using meter set to read voltage, measure voltage
1. on wire #77A at the Dual Fuel Switch
2. on wire #77B coming out of Dual Fuel Switch
Should read 10-12 volts
If 10-12V
Go to step 4
If no reading
Repair or replace
Dual Fuel Switch

Step 3

Step 4

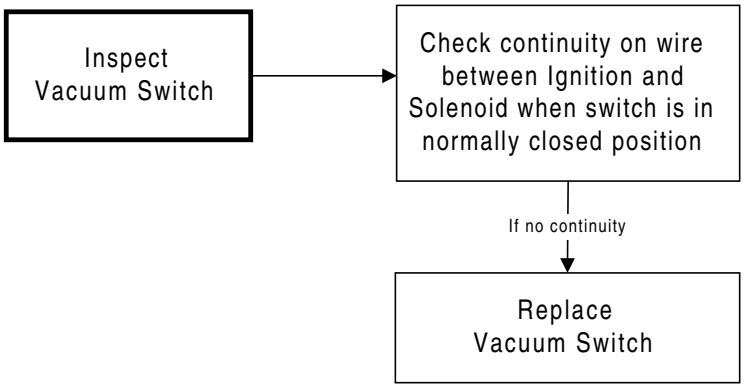
Inspect
Vacuum Switch
Check continuity on wire between Ignition and Solenoid when switch is in normally closed position
If no continuity
Replace
Vacuum Switch

SECTION TWELVE:
ACCESSORIES DIAGNOSTICS

Chart 1

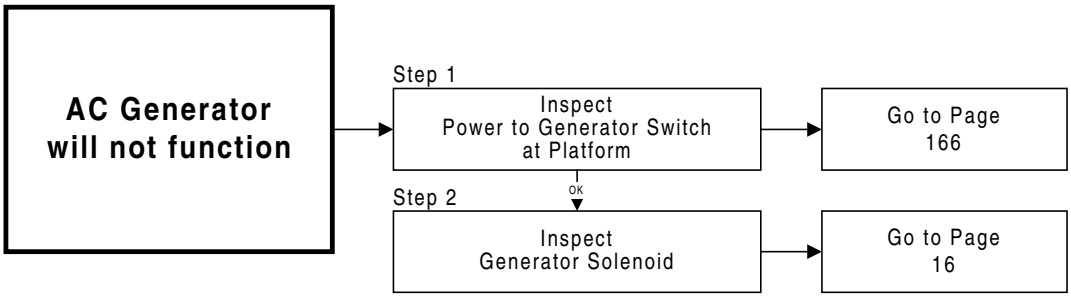

Chart 2

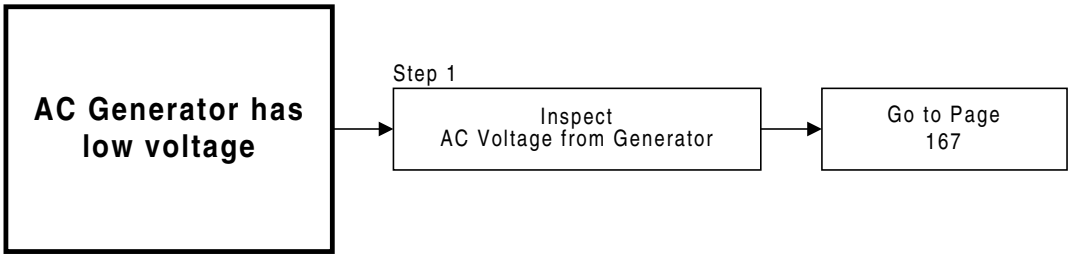

Chart 3

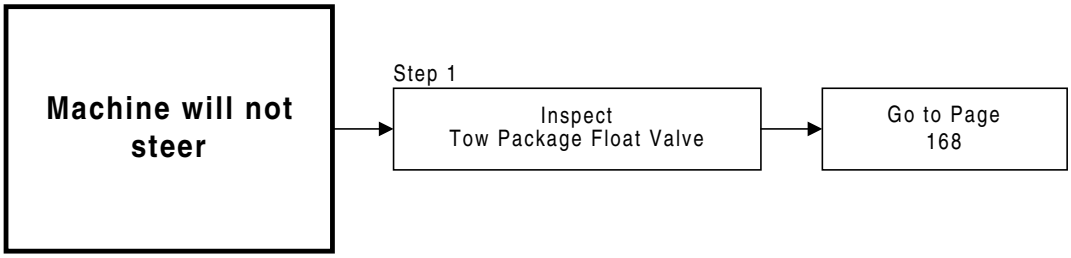

AC Generator will not function

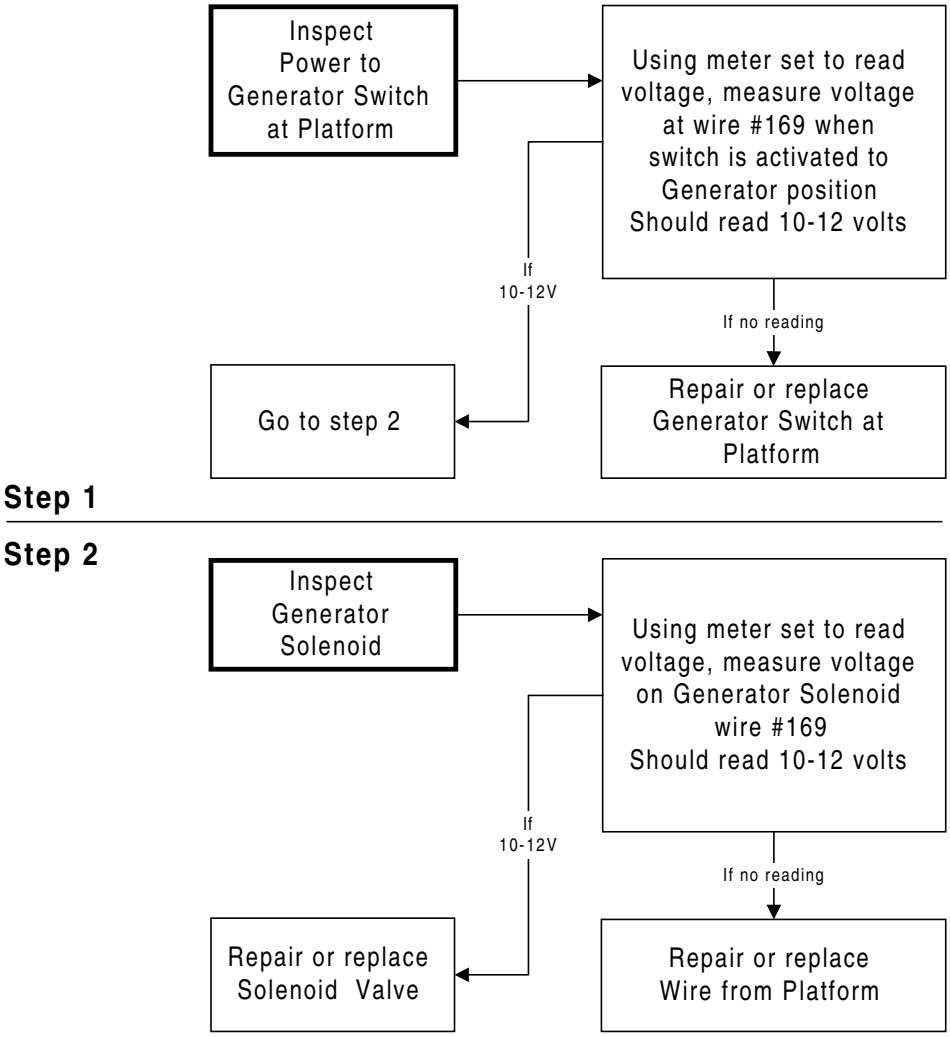

AC Generator has low voltage

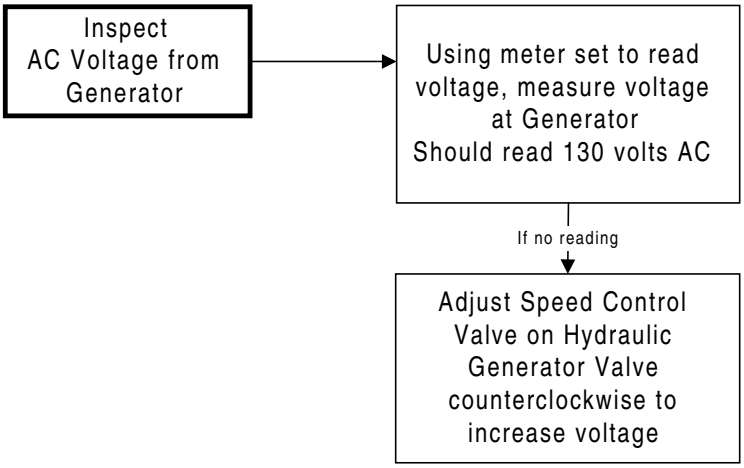

Step 1

Machine will not steer

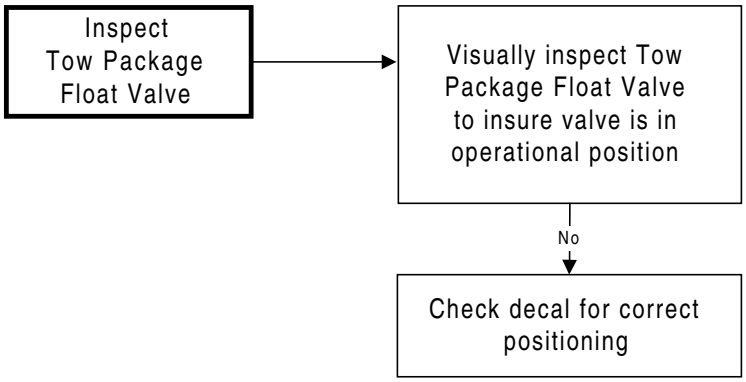

Step 1